To Be Discontinued
Last time buy: December 31, 2016
Affected models: MINAS A4 Family (Excluding E series)

A (Ace) Servo for the Next Generation

MINAS A4 Series

Advanced Gain Tuning

- Further Evolution in Real-Time Auto-Gain Tuning.

Agile and Intelligent

- Improved Damping Control handles all types of machines, from low to high stiffness machines with simple but solid operation.

Almighty

- Position Control, Velocity Control and Torque Control in one Driver supports multiplicity of application.

Amazingly slim size

- Another Evolution in down-sizing, by 25% in size. (compared to A-series)

• This product is for industrial equipment. Don't use this product at general household.

Details of Features

1. Further Adjustment-Free Operation

High-functionality Real-Time Auto-Gain Tuning

- Corresponds to even variation of load inertia. Offers real automatic gain tuning to low and high stiffness machines with a combination of an adaptive filter.
- Supports the vertical axis application where the load torque is different in rotational direction.
- Prevents the machine from over-traveling during automatic gain tuning with over-travel detecting function.
- Enables you to set and check while monitoring real-time automatic gain tuning conditions on the front panel.

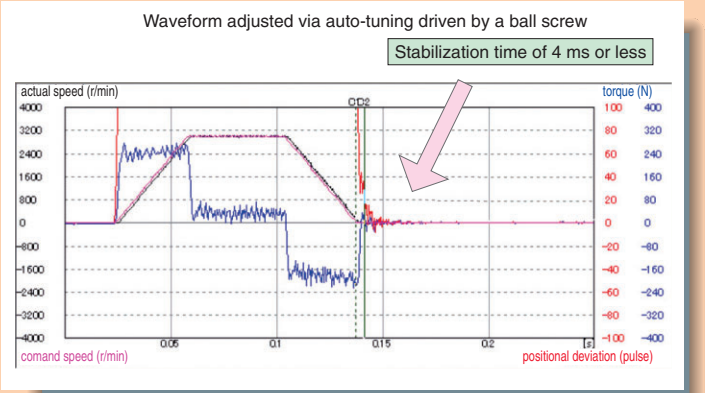

2. Further High-Speed and High-Response

Velocity response (bandwidth) of 1kHz

- Implementation of Instantaneous Velocity Observer realizes a detection of motor speed with higher speed and higher resolution.

*) In case of high stiffness machine

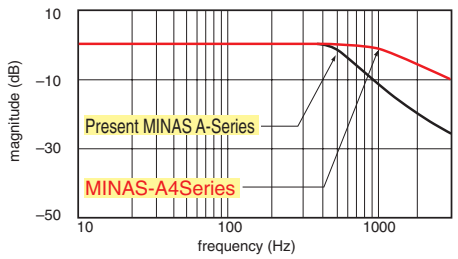

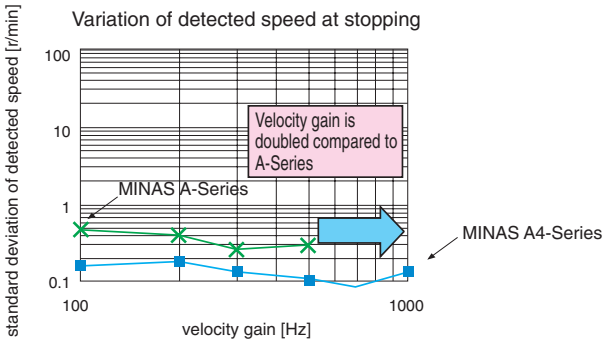

High-functionality Real-Time Auto-Gain Tuning

- Supports the low stiffness machine of belt-driven and the high stiffness machine of short stroke ball screw driven, and enables to realize high-speed positioning with high-functionality real-time auto-gain tuning.

3. Further Reduction of Vibration

Adaptive filter

- Makes the notch filter frequency automatically follow the machine resonance frequency.
- Suppression of "Judder" noise of the machine can be expected which is caused by variation of the machines or resonance frequency due to aging.

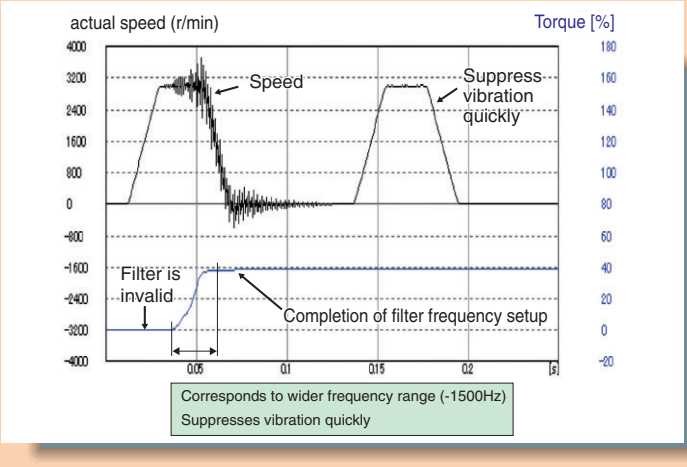

2-channel notch filters

- 2-channel notch filters are equipped in the driver independent from adaptive filter.
- You can set up both frequency and width for each of 2 filters, and set up frequency in unit of 1Hz.
- Suppression of "Judder" noise of the machine which has multiple resonance points can be expected

Effect of notch filter

without notch filter

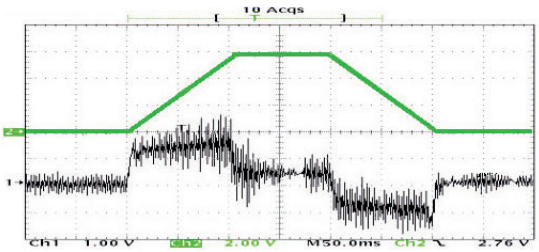

50ms/div

speed (1000r/min/div)

torque (33.3%/div)

with notch filter

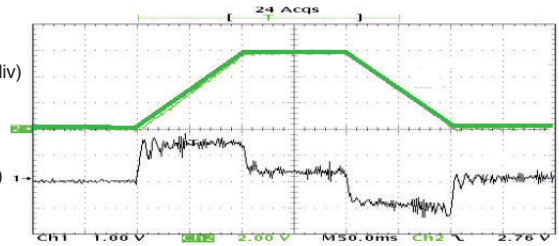

50ms/div

Damping control

- 2-channel damping filters are equipped in this driver. You can suppress vibration occurring at both starting and stopping in low stiffness machine, by manually setting up vibration frequency in 0.1Hz unit.
- You can also switch the vibration frequency set by 2-channel with rotating direction or with an external input to correspond to the variation of vibration frequency caused by the machine position.
- Easy setup with entry of only frequency and filter value. Improper setup values do not result in unstable operation

motor movement

machine movement

without damping control

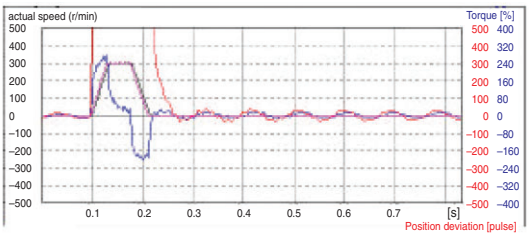

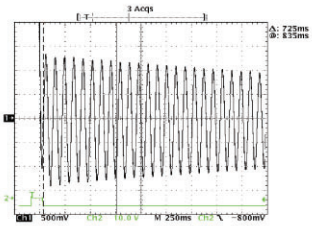

with damping control

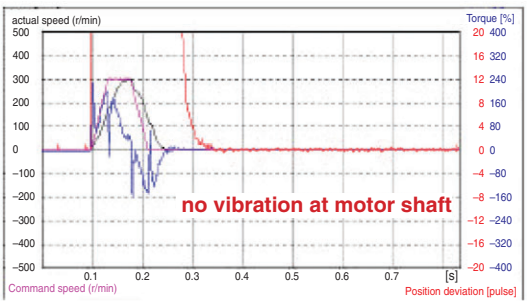

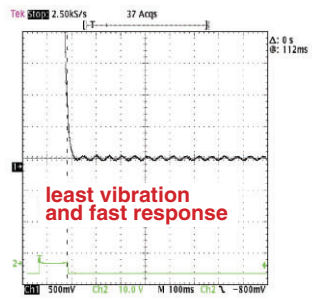

4. Further Flexibility and Multiplicity

Setup support with substantial monitoring function

- Faster communication speed of RS232/RS485 (Max.57600bps) establishes an easy and comfortable operating condition for setup support software, "PANATERM".
- Displays the factors of no-motor run and helps you to analyze the causes of troubles.
- You can set up the panel operation lock to inhibit the operation from the front panel, thus enables you to prevent miss-operation such as unintentional change of parameters.

*Note) Refer to page "F2" for setup support software.

Command control modes

- Offers you "Position" , "Velocity (including internal 8-speed)" and "Torque" command control modes
- You can set up any one of the command control modes, or selectable two command control mode with parameter.
- You can set up any command control mode depending on your application.

Monitoring function with front panel

- LED display and analog monitor terminals are installed in the front panel.
- Displays "Motor speed" , "Motor torque" Position deviation" , "Motor load factor" and "Regeneration load factor" on LED.
- You can monitor "Motor speed" ,"Motor torque" and "Position deviation" through analog monitor terminals.

Trial run (JOG)

- Features the function for trial (JOG) run through the front panel or console (option) without connecting to a host controller.
- You can shorten the machine setup time.

Full-closed control (High precision positioning)

- Features the full-closed control of position and velocity, using the signals from feedback scale installed on the load side and high resolution encoder.

Note) Applicable feedback scales are as follows,

- Made by Mitsutoyo

	Resolution(μm)	Max. Speed*(m/s)
ABS AT573A Series	0.05	2
ABS ST771A Series	0.5	5
ABS ST773A Series	0.1	4
ABS ST771AL Series	0.5	5
ABS ST773AL Series	0.1	4

- Made by Sony Manufacturing System

	Resolution(μm)	Max. Speed*(m/s)
SR77 Series	0.05	2
SR87 Series	0.05	2

High resolution laser scales are also available.

(* The maximum speed depends on the driver performance. It is limited by the machine configuration and system configuration.)

- Best suits to high precision machines.

Inrush current suppressing function

- Inrush current suppressing resistor is equipped in this driver, which prevents the circuit breaker shutdown of the power supply caused by inrush current at power-on.
- Prevents unintentional shutdown of the power supply circuit breaker in multi-axes application and does not give load to the power line.

Regeneration discharging function

- Discharges the regenerative energy with resistor, which energy is generated while stopping the load with large moment of inertia, or use in up-down operation, and is returned to the driver from the motor.
- No regeneration discharge resistor is built-in to Frame A driver (MADDT1105 type.), Frame B driver (MBDDT2210 type.) and Frame G driver (MGDDTC3B4 type.) and we recommend you to connect optional regenerative resistor.
- Regenerative resistor is built-in to Frame C to F drivers, however, connection of the optional regenerative resistor bring you further regenerative capability.

Built-in dynamic brake

- You can select the dynamic brake action which short the servo motor windings of U, V and W, at Servo-OFF, CW/CCW over-travel inhibition, power shutdown and trip.
- You can select the action sequence setup depending on the machine requirement.

Positioning pulse

- Corresponds up to 2Mpps of pulse input at positioning control.

Setup support software

- With the setup support software, "PANATERM " via RS232/RS485 communication port, you can monitor the running status of the driver and set up parameters.
- You can read out the absolute position data of the motor with absolute encoder.

Wave-form graphic function

- With the setup support software, "PANATERM" , you can monitor the "Command speed" , "Actual speed" ,"Torque" , "Position deviation " and "Positioning complete signal" .
- Helps you to analyze the machine and shorten the setup time

*Note) Refer to page "F2" for setup support software.

Torque limit value switching

- You can setup 2 torque limits and use them for tension control or press & hold control.
- It is possible to apply it to bumping homing.

SEMI F47 voltage sag immunity

- Features the function which complies to voltage sag immunity standard of SEMI F47 at no load or light load.
- Useful for semiconductor industry.

Notes)
1) Not applicable to single phase, 100V type.
2) Verify with the actual machine condition to F47, voltage sag immunity standard.

Frequency analyzing function

- You can confirm the response frequency characteristics of total machine mechanism including the servo motor with the setup support software, "PANATERM"
- Helps you to analyze the machine and shorten the setup time
  *Note) Refer to page "F2" for setup support software.

Applicable overseas safety standards

Subject	Standard conformed		
Motor	IEC60034-1 IEC60034-5 UL1004 CSA22.2 No.100		Conforms to Low-Voltage Directives
Motor and driver	EN50178 UL508C CSA22.2 No.14		
	EN55011	Radio Disturbance Characteristics of Industrial, Scientific and Medical (ISM) Radio-Frequency Equipment	Conforms to references by EMC Directives
	EN61000-6-2	Immunity for Industrial Environments	
	IEC61000-4-2	Electrostatic Discharge Immunity Test	
	IEC61000-4-3	Radio Frequency Electromagnetic Field Immunity Test	
	IEC61000-4-4	Electric High-Speed Transition Phenomenon/ Burst Immunity Test	
	IEC61000-4-5	Lightening Surge Immunity Test	
	IEC61000-4-6	High Frequency Conduction Immunity Test	
	IEC61000-4-11	Instantaneous Outage Immunity Test	

I E C : International Electrotechnical Commission
E N : Europaischen Normen
EMC : Electromagnetic Compatibility
U L : Underwriters Laboratories
CSA : Canadian Standards Association

Pursuant to at the directive 2004/108/EC,article 9(2)

Panasonic Testing Centre
Panasonic Service Europe,
a division of Panasonic Marketing Europe GmbH
Winsbergring 15,22525 Hamburg,F.R.Germany

* When export this product, follow statutory provisions of the destination country.

Motor Line-up

	Motor series *	Rated output (kW)	Rated rotational speed (Max. speed) (r/min)	Rotary encoder		Brake	Gear	CE/UL	Enclosure	Features	Applications
				2500P/r incremental	17bit absolute/ incremental	Holding	High precision				
Ultra low inertia	MAMA	0.1-0.75 4 models 0.1, 0.2, 0.4 and 0.75	5000 (6000)	○	○	○	—	○	IP65 (Except shaft through hole and connector)	·Small capacity ·Suitable for the machines directly coupled with high speed ball screw and high stiffness and high repetitive application	·SMT machines ·Inserters ·High repetitive positioning application
Low inertia	MSMD	0.05-0.75 5 models 0.05, 0.1, 0.2, 0.4 and 0.75	3000 (5000) *For 400W/100V and 750W 3000 (4500)	○	○	○	○	○	IP65 (Except shaft through hole and connector)	·Small capacity ·Suitable for all applications	·Inserters ·Belt driven machines ·Unloading robot
	MQMA (Cube type)	0.1-0.4 3 models 0.1, 0.2, and 0.4	3000 (5000) *For 400W/100V 3000 (4500)	○	○	○	—	○	IP65 (Except shaft through hole and connector)	·Small capacity ·Suitable for flat type and low stiffness machines with belt driven	·SMT machines ·Inserters ·Belt driven machines ·Unloading robot
	MSMA	1.0-5.0 6 models 1.0,1.5,2.0, 3.0,4.0 and 5.0	3000 (5000) *For 4kW and 5kW 3000 (4500)	○	○	○	—	○	IP65 (Except cannon plug/ connector pins)	·Middle capacity ·Suitable for the machines directly coupled with ball screw and high stiffness and high repetitive application	·SMT machines ·Inserter ·Food machines
Middle inertia	MDMA	1.0-7.5 7 models 1.0,1.5,2.0, 3.0,4.0,5.0 and 7.5	2000 (3000) *For 7.5kW 1500 (3000)	○	○	○	—	○	IP65 (Except cannon plug/ connector pins)	·Middle capacity ·Suitable for low stiffness machines with belt driven	·Belt driven machines ·Conveyers ·Robots
	MGMA (Low speed/ High torque type)	0.9-6.0 5 models 0.9,2.0, 3.0,4.5 and 6.0	1000 (2000)	○	○	○	—	○	IP65 (Except cannon plug/ connector pins)	·Middle capacity ·Suitable for machines requiring low speed with high torque	·Belt driven machines ·Conveyers ·Robots
	MFMA (Flat type) 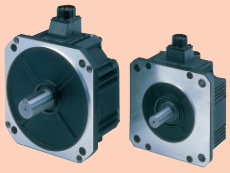	0.4-4.5 4 models 0.4,1.5, 2.5 and 4.5	2000 (3000)	○	○	○	—	○	IP65 (Except cannon plug/ connector pins)	·Middle capacity ·Flat type and suitable for machines with space limitation	·Robots ·Food machines
High inertia	MHMA	0.5-7.5 8 models 0.5,1.0,1.5, 2.0,3.0,4.0, 5.0 and 7.5	2000 (3000) *For 7.5kW 1500 (3000)	○	○	○	—	○	IP65 (Except cannon plug/ connector pins)	·Middle capacity ·Suitable for low stiffness machines with belt driven, and large load moment of inertia	·Belt driven machines ·Conveyors ·Robots

* Motor is sharing with A4F/A4P series

Model Designation

• Servo Motor

M S M D 5 A Z S 1 S * *

Special specifications

Motor structure

Design order
1 : Standard

Symbol	Type
MAMA	Ultra low inertia (100W-750W)
MSMD	Low inertia (50W-750W)
MQMA	Low inertia (100W-400W)
MSMA	Low inertia (1.0kW-5.0W)
MDMA	Middle inertia (1.0kW-7.5kW)
MGMA	Middle inertia (900W-6.0kW)
MFMA	Middle inertia (400W-4.5kW)
MHMA	High inertia (500W-7.5kW)

Motor rated output

Symbol	Rated output	Symbol	Rated output
5A	50W	15	1.5kW
01	100W	20	2.0kW
02	200W	25	2.5kW
04	400W	30	3.0kW
05	500W	40	4.0kW
08	750W	45	4.5kW
09	900W	50	5.0kW
10	1.0kW	60	6.0kW
		75	7.5kW

Rotary encoder specifications

Symbol	Format	Pulse counts	Resolution	Wires
P	Incremental	2500P/r	10000	5
S	Absolute/ Incremental common	17bit	131072	7

Voltage specifications

Symbol	Specifications
1	100V
2	200V
Z	100V/200V common(50W only)

MSMD (standard stock), MQMA (build to order)

Symbol	Shaft		Holding brake		Oil seal	
	Round	Key-way, center tap	without	with	without	with*
A	●		●		●	
B	●			●	●	
S		●	●		●	
T		●		●	●	

*Motor with oil seal is manufactured by order.

MSMA , MDMA , MGMA , MFMA , MHMA

Symbol	Shaft		Holding brake		Oil seal	
	Round	Key-way	without	with	without	with
C	●		●			●
D	●			●		●
G		●	●			●
H		●		●		●

Products are standard stock items or build to order items. See index (page F31).

MAMA

Symbol	Shaft		Holding brake		Oil seal	
	Round	Key-way	without	with	without	with
A	●		●		●	
B	●			●	●	
E		●	●		●	
F		●		●	●	

Products are standard stock items or build to order items. See index (page F31).

See page, A4-77 for motor specifications

• Motor with reduction gear

M S M D 0 1 1 P 3 1 N

Symbol	Type
MSMD	Low inertia (100W-750W)

Motor rated output

Symbol	Rated output
01	100W
02	200W
04	400W
08	750W

Voltage specifications

Symbol	Specifications
1	100V
2	200V

Rotary encoder specifications

Symbol	Format	Pulse counts	Resolution	Wires
P	Incremental	2500P/r	10000	5
S	Absolute/ Incremental common	17bit	131072	7

Gear reduction ration, gear type

Symbol	Gear reduction ratio	Motor output (W)				Gear type
		100	200	400	750	
1N	1 / 5	●	●	●	●	For high accuracy
2N	1 / 9	●	●	●	●	
3N	1 / 15	●	●	●	●	
4N	1 / 25	●	●	●	●	

Motor structure

Symbol	Shaft	Holding brake	
	Key-way	without	with
3	●	●	
4	●		●

See page, A4-133 for motor with gear reducer specifications

• Servo Driver

M A D D T 1 2 0 5 * * *

Special specifications

Frame symbol

Symbol	Frame
MADD	A4 series, Frame A
MBDD	A4 series, Frame B
MCDD	A4 series, Frame C
MDDD	A4 series, Frame D
MEDD	A4 series, Frame E
MFDD	A4 series, Frame F
MGDD	A4 series, Frame G

Power device Max. current rating

Symbol	Power device Max. current rating
T1	1 0A
T2	1 5A
T3	3 0A
T5	5 0A
T7	7 5A
TA	1 0 0A
TB	1 5 0A
TC	3 0 0A

Supply voltage specifications

Symbol	Specifications
1	Single phase, 100V
2	Single phase, 200V
3	3-phase, 200V
5	Single/3-phase,200V

Current detector current rating

Symbol	Current detector, current rating
05	5A
07	7.5A
10	1 0A
20	2 0A
30	3 0A
40	4 0A
64	6 4A
90	9 0A
A2	1 2 0A
B4	2 4 0A

See page, A4-15 for driver specifications

Wiring example

Driver Frame Type Symbol (Frame A, B, C, D)

For details, refer to the Instruction Manual.

● Wiring of main circuit

Circuit Breaker (NFB)
Protects the power lines.
Shuts off the circuit when overcurrent passes.

Noise Filter (NF)
Prevents external noise from the power lines.
And reduces an effect of the noise generated by the servo driver.

Magnetic Contactor (MC)
Turns on/off the main power of the servo driver.
Surge absorber to be used together with this.

Reactor (L)
Reduces harmonic current of the main power.

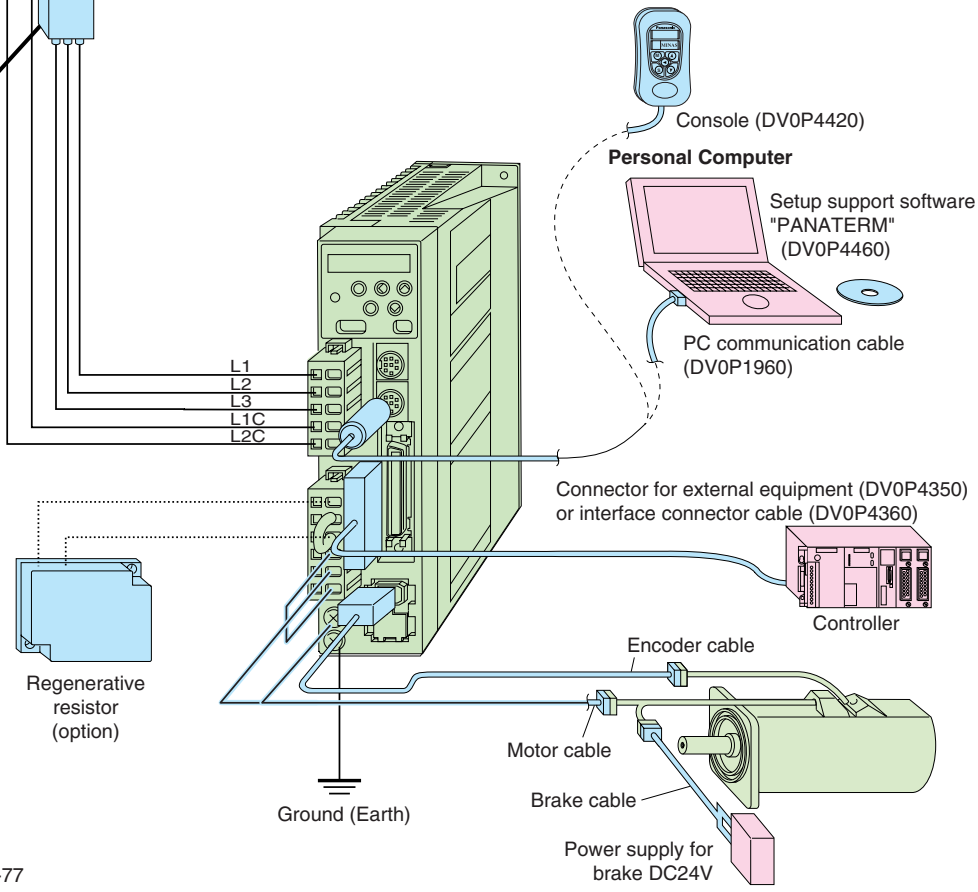

Pin RB1, RB2 and RB3 ...

- RB2 and RB3 to be kept shorted for normal operation.
- When the internal regenerative resistor capacity has shortage, disconnect between RB2 and RB3, then connect an external regenerative resistor between RB1 and RB2. (Note: that no regenerative resistor is equipped in Frame A and B type.)

Motor	to page A4-77
Driver	to page A4-15
Option	to page A4-141
Recommended equipments	to page A4-12
Parts customer to prepare	

Driver Frame Type Symbol (Frame E, F)

For details, refer to the Instruction Manual.

● Wiring of main circuit

Circuit Breaker (NFB)
Protects the power lines.
Shuts off the circuit when overcurrent passes.

Noise Filter (NF)
Prevents external noise from the power lines.
And reduces an effect of the noise generated by the servo driver.

Magnetic Contactor (MC)
Turns on/off the main power of the servo driver.
Surge absorber to be used together with this.

Reactor (L)
Reduces harmonic current of the main power.

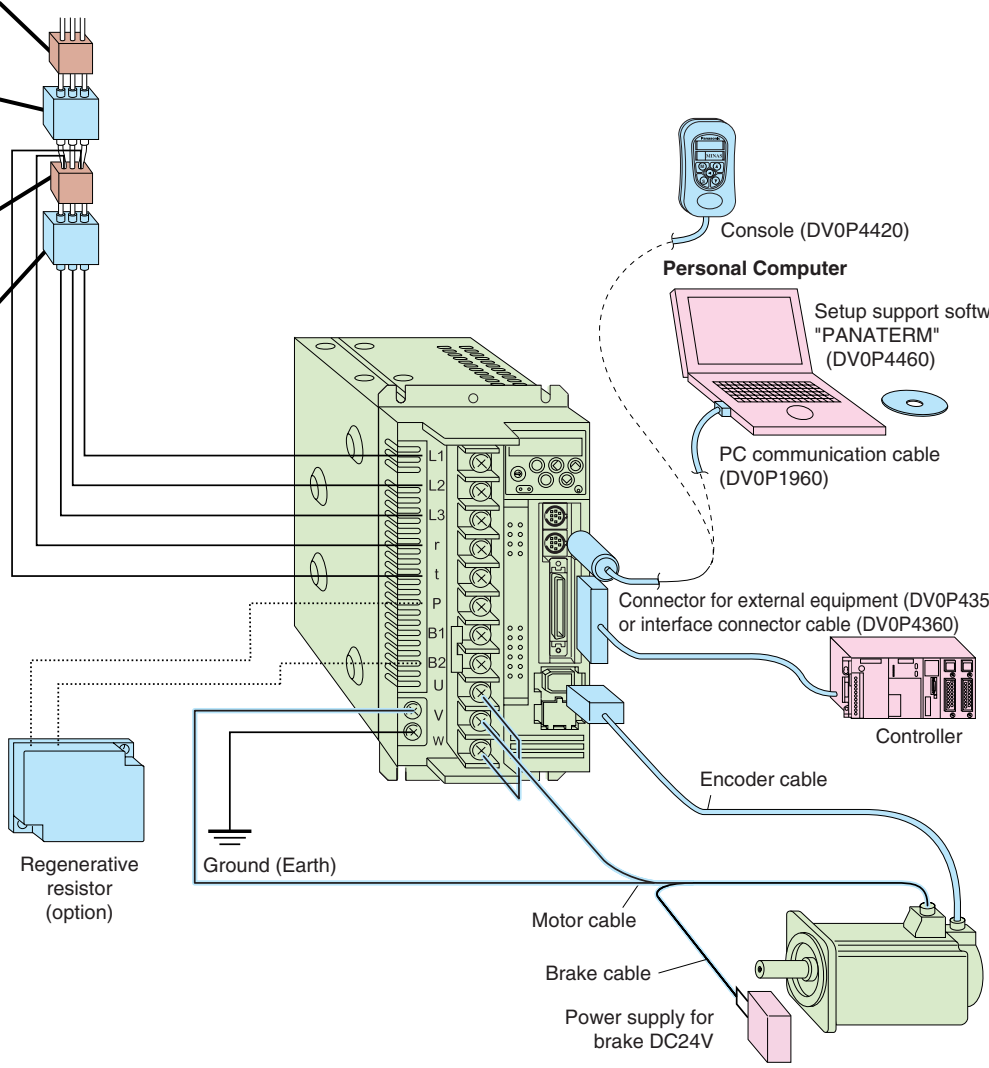

P, B1 and B2 ...
- B1 and B2 to be kept shorted for normal operation.
- When the internal regenerative resistor capacity has shortage, disconnect between B1 and B2, then connect an external regenerative resistor between P and B2.

Motor	to page A4-77
Driver	to page A4-15
Option	to page A4-141
Recommended equipments	to page A4-12
Parts customer to prepare	

Wiring example

Driver Frame Type Symbol (Frame G)

For details, refer to the Instruction Manual.

● Wiring of main circuit

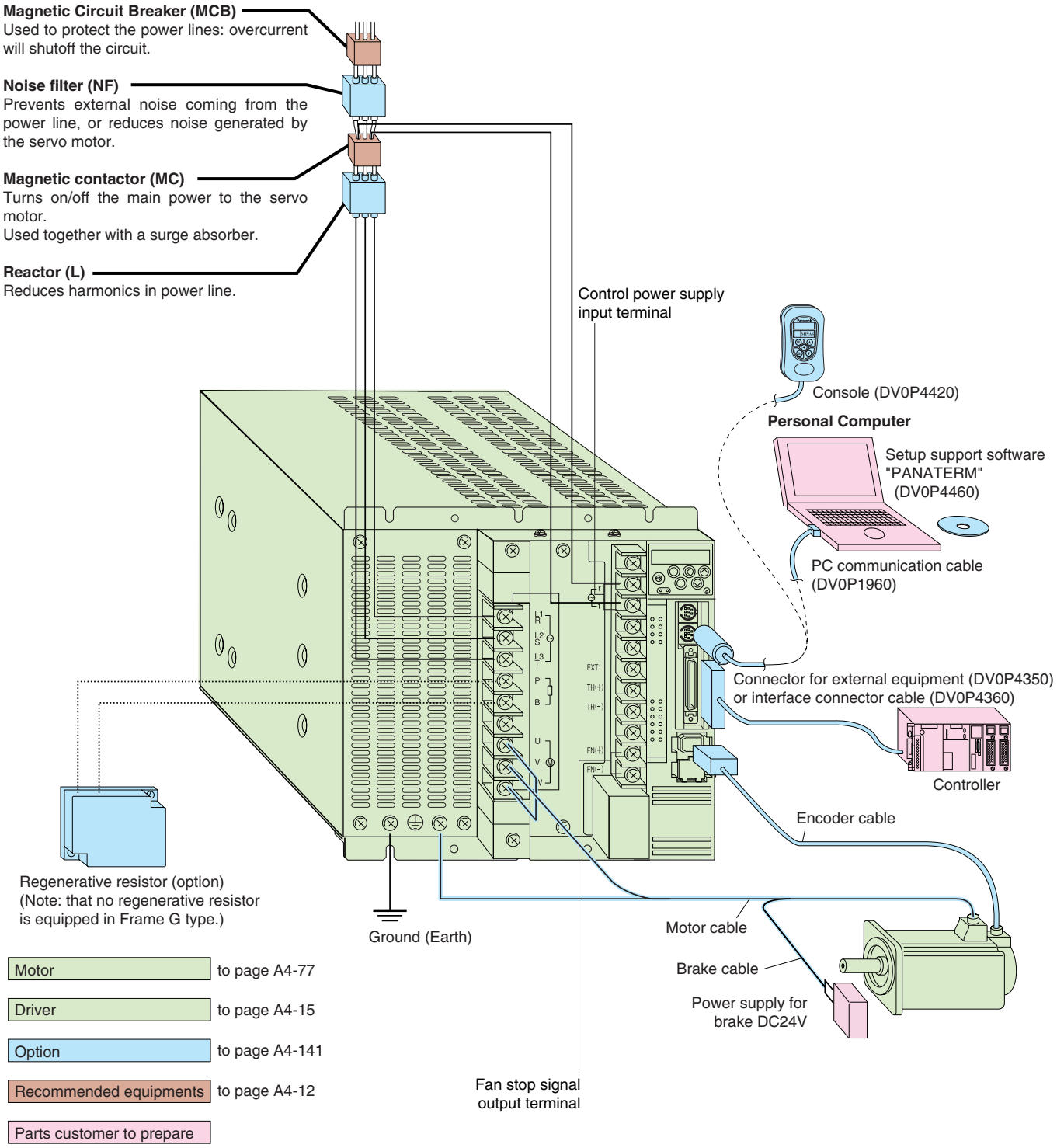

• List of recommended peripheral equipments

Power supply voltage	Applicable motor Series	Applicable motor Output	Power capacity (atrated load)	Circuit breaker (rated current)	Noise filter	Surge absorber	Noise filter (signal)	Magnetic contactor (Contact)	Cable diameter (Main circuit)	Cable diameter (controlcircuit)	Connector
Single phase, 100V	MSMD	50W	Approx. 0.4kVA	BBW2102 (10A)	DVOP4170	DVOP4190	DVOP1460	BMFT61041N (3P+1a)	0.75mm² to 2.0mm² AWG14 to 18	0.75mm² AWG18	Connection to exclusive connector
	MSMD MQMA	100W									
		200W	Approx. 0.5kVA								
		400W	Approx. 0.9kVA		DVOP4180			BMFT61541N (3P+1a)			
Single phase, 200V	MSMD	50W	Approx. 0.5kVA		DVOP4170			BMFT61542N (3P+1a)			
		100W									
	MAMA MQMA	100W	Approx. 0.3kVA								
	MAMA MSMD MQMA	200W	Approx. 0.5kVA								
	MSMD MQMA	400W	Approx. 0.9kVA								
Single/ 3-phase, 200V	MAMA MFMA	400W	Approx. 0.9kVA	BBW3152 (15A)	DVOP4180	DVOP1450					
	MHMA	500W	Approx. 1.1kVA								
	MSMD	750W	Approx. 1.3kVA								
	MAMA		Approx. 1.6kVA		DVOP4220			BMFT61842N (3P+1a)	2.0mm² AWG14		
	MDMA MHMA	1.0kW	Approx. 1.8kVA								
	MGMA	900W									
	MSMA	1.0kW		BBW3202 (20A)							
	MSMA MDMA MFMA MHMA	1.5kW	Approx. 2.3kVA								
3-phase, 200V	MSMA MDMA MHMA	2.0kW	Approx. 3.3kVA	BBW3302 (30A)	DVOP4220			BMF6352N (3P+2a2b)			Terminal block M5 11.0 or smaller ø5.3
	MFMA	2.5kW	Approx. 3.8kVA						3.5mm² AWG12		
	MGMA	2.0kW		BBW350S (50A)	DVOP3410						
	MSMA MDMA MHMA MGMA	3.0kW	Approx. 4.5kVA								
	MSMA MDMA MHMA	4.0kW	Approx. 6.0kVA					BMF6652N (3P+2a2b)			
	MFMA	4.5kW	Approx. 6.8kVA								
	MGMA		Approx. 7.5kVA								
	MSMA MDMA MHMA	5.0kW							5.3mm² AWG10		
	MGMA	6.0kW	Approx. 9.0kVA	BBW360S (60A)					L1, L2, L3 5.3mm² AWG10 U, V, W 14mm² AWG6		
	MDMA MHMA	7.5kW	Approx. 11kVA								

- Select a single and 3-phase common specifications corresponding to the power supplies.
- Listed circuit breaker and magnetic contactor are manufactured by Panasonic Electric Works.
  To conform to EC Directives, install a circuit breaker which conforms to IEC and UL Standards (Listed, UL marked) between noise filter and power supply without fail.
- For details of noise filter, refer to Page A4-138.

<Remarks>

- Select a circuit breaker and noise filter which match to the capacity of power supply (including a load condition).
- Terminal block and earth terminals
  - Use a copper conductor cables with temperature rating of 60˚C or higher.
  - Earth terminals for Frame A to D are M4 and M5 for Frame E to G.
  - Larger tightening toque for screws than the max.value (M4 : 1.2 N·m, M5 : 2.0 N·m) may damage the terminal block.
  - Mounting screws on the cover of terminal block for frames E to G and screw on acrylic cover of terminal block for frame G should be tightened with 0.2 N·m torque.
    Application of torque larger than 0.2 N·m may damage the thread on the driver.
- Use an earth cable with the same diameter as that of the main circuit cable.
  If the diameter of the main circuit cable is 1.6mm² or less, use an earth cable with a diameter of 1.6mm² (AWG14).
- Use the attached exclusive connector for A to D-frame, and maintain the peeled off length of 8 tot 9mm.
- Tighten the screws of the connector, CN X5 for the host controller with the torque of 0.2±0.05 N·m.
- Larger torque than 0.25N·m may damage the connector at the driver side.

<Caution>

Do not turn on power without first positively tightening all terminal block screws, otherwise, loose contacts may generate heat (smoking, firing).

Table of Part Numbers and Options

Motor series	Power supply	Rated rotational speed (r/min)	Output (W)	2500P/r, Incremental: Motor Note) 1	Rating/ Spec. (page)	Encoder cable Note) 2	17bit, Absolute/Incremental common: Motor Note) 1	Rating/ Spec. (page)	Encoder cable Note) 2	Encoder cable Note) 2	2500P/r and 17bit common: Driver	Frame symbol		Optional parts: Motor cable Note) 2	Motor cable (with brake) Note) 2	Brake cable Note) 2	Regenerative resistor	Reactor	Noise filter
MAMA [Ultra low inertia]	Single phase 200V	5000	100	MAMA012P1□	A4-77	MFECA 0**0EAM	MAMA012S1□	A4-77	MFECA 0**0EAE	MFECA 0**0EAD	MADDT1207	A-frame		MFMCA 0**0EED	—	MFMCB 0**0GET	DV0P4283	DV0P220	DV0P4170
			200	MAMA022P1□			MAMA022S1□				MBDDT2210	B-frame							
			400	MAMA042P1□			MAMA042S1□				MCDDT3520	C-frame						DV0P221	DV0P4180
			750	MAMA082P1□			MAMA082S1□				MDDDT5540	D-frame					DV0P4284		DV0P4220
	3-phase, 200V	5000	400	MAMA042P1□			MAMA042S1□				MCDDT3520	C-frame					DV0P4283	DV0P220	DV0P4180
			750	MAMA082P1□			MAMA082S1□				MDDDT5540	D-frame					DV0P4284	DV0P221	DV0P4220
MSMD [low inertia]	Single phase 100V	3000	50	MSMD5AZP1□	A4-79	MFECA 0**0EAM	MSMD5AZS1□	A4-79	MFECA 0**0EAE	MFECA 0**0EAD	MADDT1105	A-frame		MFMCA 0**0EED	—	MFMCB 0**0GET	DV0P4280	DV0P227	DV0P4170
			100	MSMD011P1□			MSMD011S1□				MADDT1107								
			200	MSMD021P1□	A4-81		MSMD021S1□	A4-81			MBDDT2110	B-frame					DV0P4283	DV0P228	
			400	MSMD041P1□			MSMD041S1□				MCDDT3120	C-frame					DV0P4282		DV0P4180
	Single phase 200V	3000	50	MSMD5AZP1□	A4-83		MSMD5AZS1□	A4-83			MADDT1205	A-frame					DV0P4281	DV0P220	DV0P4170
			100	MSMD012P1□			MSMD012S1□				MADDT1205								
			200	MSMD022P1□	A4-85		MSMD022S1□	A4-85			MADDT1207						DV0P4283		
			400	MSMD042P1□			MSMD042S1□				MBDDT2210	B-frame						DV0P221	
			750	MSMD082P1□			MSMD082S1□				MCDDT3520	C-frame							DV0P4180
	3-phase, 200V	3000	750	MSMD082P1□			MSMD082S1□				MCDDT3520								
MQMA [Low inertia Cube type]	Single phase 100V	3000	100	MQMA011P1□	A4-87	MFECA 0**0EAM	MQMA011S1□	A4-87	MFECA 0**0EAE	MFECA 0**0EAD	MADDT1107	A-frame		MFMCA 0**0EED	—	MFMCB 0**0GET	DV0P4280	DV0P227	DV0P4170
			200	MQMA021P1□			MQMA021S1□				MBDDT2110	B-frame					DV0P4283	DV0P228	
			400	MQMA041P1□			MQMA041S1□				MCDDT3120	C-frame					DV0P4282		DV0P4180
	Single phase 200V	3000	100	MQMA012P1□	A4-89		MQMA012S1□	A4-89			MADDT1205	A-frame					DV0P4281	DV0P220	DV0P4170
			200	MQMA022P1□			MQMA022S1□				MADDT1207						DV0P4283		
			400	MQMA042P1□			MQMA042S1□				MBDDT2210	B-frame						DV0P221	
MSMA [low inertia]	Single phase 200V	3000	1000	MSMA102P1□	A4-91	MFECA 0**0ESD	MSMA102S1□	A4-91	MFECA 0**0ESE	MFECA 0**0ESD	MDDDT5540	D-frame		MFMCD 0**2ECD	MFMCA 0**2FCD	—	DV0P4284	DV0P222	DV0P4220
			1500	MSMA152P1□			MSMA152S1□				MDDDT5540								
	3-phase, 200V	3000	1000	MSMA102P1□			MSMA102S1□				MDDDT5540								
			1500	MSMA152P1□			MSMA152S1□				MDDDT5540								
			2000	MSMA202P1□			MSMA202S1□				MEDDT7364	E-frame		MFMCD0**2ECT	MFMCA0**2FCT		DV0P4285	DV0P223	
			3000	MSMA302P1□	A4-93		MSMA302S1□	A4-93			MFDDTA390	F-frame		MFMCA 0**3ECT	MFMCA 0**3FCT		DV0P4285 x 2 in parallel	DV0P224	
			4000	MSMA402P1□			MSMA402S1□				MFDDTB3A2							DV0P225	DV0P3410
			5000	MSMA502P1□			MSMA502S1□				MFDDTB3A2							—	
MDMA [Middle inertia]	Single phase 200V	2000	1000	MDMA102P1□	A4-95	MFECA 0**0ESD	MDMA102S1□	A4-95	MFECA 0**0ESE	MFECA 0**0ESD	MDDDT3530	D-frame		MFMCD 0**2ECD	MFMCA 0**2FCD	—	DV0P4284	DV0P222	DV0P4220
			1500	MDMA152P1□			MDMA152S1□				MDDDT5540								
	3-phase, 200V	2000 Note)3	1000	MDMA102P1□			MDMA102S1□				MDDDT3530								
			1500	MDMA152P1□			MDMA152S1□				MDDDT5540								
			2000	MDMA202P1□	A4-97		MDMA202S1□	A4-97			MEDDT7364	E-frame		MFMCD0**2ECT	MFMCA0**2FCT		DV0P4285	DV0P223	
			3000	MDMA302P1□			MDMA302S1□				MFDDTA390	F-frame		MFMCA 0**3ECT	MFMCA 0**3FCT		DV0P4285 x 2 in parallel	DV0P224	
			4000	MDMA402P1□	A4-99		MDMA402S1□	A4-99			MFDDTB3A2							DV0P225	DV0P3410
			5000	MDMA502P1□			MDMA502S1□				MFDDTB3A2							—	
			7500	MDMA752P1□			MDMA752S1□				MGDDTC3B4	G-frame		—	—		DV0P4285 x 4 in parallel	—	
MGMA [Middle inertia Low speed/ High torque]	Single phase 200V	1000	900	MGMA092P1□	A4-101	MFECA 0**0ESD	MGMA092S1□	A4-101	MFECA 0**0ESE	MFECA 0**0ESD	MDDDT5540	D-frame		MFMCD 0**2ECD	MFMCA 0**2FCD	—	DV0P4284	DV0P222	DV0P4220
	3-phase, 200V		900	MGMA092P1□			MGMA092S1□				MDDDT5540								
			2000	MGMA202P1□			MGMA202S1□				MFDDTA390	F-frame		MFMCA 0**3ECT	MFMCA 0**3FCT		DV0P4285 x 2 in parallel	DV0P223	
			3000	MGMA302P1□	A4-103		MGMA302S1□	A4-103			MFDDTB3A2							DV0P224	DV0P3410
			4500	MGMA452P1□			MGMA452S1□				MFDDTB3A2							—	
			6000	MGMA602P1□			MGMA602S1□				MGDDTC3B4	G-frame		—	—		DV0P4285 x 4 in parallel	—	
MFMA [Middle inertia Flat type]	Single phase 200V	2000	400	MFMA042P1□	A4-105	MFECA 0**0ESD	MFMA042S1□	A4-105	MFECA 0**0ESE	MFECA 0**0ESD	MCDDT3520	C-frame		MFMCA 0**2ECD	MFMCA 0**2FCD	—	DV0P4283	DV0P220	DV0P4180
			1500	MFMA152P1□			MFMA152S1□				MDDDT5540	D-frame					DV0P4284	DV0P222	DV0P4220
	3-phase, 200V	2000 Note)3	400	MFMA042P1□			MFMA042S1□				MCDDT3520	C-frame					DV0P4283	DV0P220	DV0P4180
			1500	MFMA152P1□			MFMA152S1□				MDDDT5540	D-frame					DV0P4284	DV0P222	DV0P4220
			2500	MFMA252P1□	A4-107		MFMA252S1□	A4-107			MEDDT7364	E-frame		MFMCD 0**3ECT	MFMCA 0**3FCT		DV0P4285	DV0P224	
			4500	MFMA452P1□			MFMA452S1□				MFDDTB3A2	F-frame					DV0P4285 x 2 in parallel	—	DV0P3410
MHMA [High inertia]	Single phase 200V	2000	500	MHMA052P1□	A4-109	MFECA 0**0ESD	MHMA052S1□	A4-109	MFECA 0**0ESE	MFECA 0**0ESD	MCDDT3520	C-frame		MFMCD 0**2ECD	MFMCA 0**2FCD	—	DV0P4283	DV0P220	DV0P4180
			1000	MHMA102P1□			MHMA102S1□				MDDDT3530	D-frame					DV0P4284	DV0P222	DV0P4220
			1500	MHMA152P1□			MHMA152S1□				MDDDT5540								
	3-phase, 200V	2000 Note)3	500	MHMA052P1□			MHMA052S1□				MCDDT3520	C-frame					DV0P4283	DV0P220	DV0P4180
			1000	MHMA102P1□			MHMA102S1□				MDDDT3530	D-frame					DV0P4284	DV0P222	DV0P4220
			1500	MHMA152P1□			MHMA152S1□				MDDDT5540								
			2000	MHMA202P1□	A4-111		MHMA202S1□	A4-111			MEDDT7364	E-frame		MFMCA 0**3ECT	MFMCA 0**3FCT		DV0P4285	DV0P223	
			3000	MHMA302P1□			MHMA302S1□				MFDDTA390	F-frame					DV0P4285 x 2 in parallel	DV0P224	
			4000	MHMA402P1□			MHMA402S1□				MFDDTB3A2							DV0P225	DV0P3410
			5000	MHMA502P1□			MHMA502S1□				MFDDTB3A2							—	
			7500	MHMA752P1□	A4-113		MHMA752S1□	A4-113			MGDDTC3B4	G-frame		—	—		DV0P4285 x 4 in parallel		

• Carrying page

Options		Part No.	Carrying page
Technical reference	Japanese	DV0P4200	—
	English	DV0P4210	—
Console		DV0P4420	A4-152
Setup support software, PANATERM	Japanese	DV0P4460	A4-151
	English		
RS232 communication cable (for connection with PC)		DV0P1960	A4-147
RS485 communication cable (for connection with PC)		DV0P1970	A4-147
		DV0P1971	
		DV0P1972	
Interface cable		DV0P4360	A4-147
Connector kit for external equipment		DV0P4350	A4-146
Connector kit for power supply input	For A frame, B frame	DV0PM20093	
	For C frame, D frame	DV0PM20032	
Connector kit for motor connection (driver side)	For A frame to D frame	DV0PM20034	
Connector kit for motor and encoder		DV0P4290	A4-148
		DV0P4380	
		DV0P4310	A4-149
		DV0P4320	
		DV0P4330	
		DV0P4340	
		DV0PM20005	A4-150
		DV0PM20006	
Battery for absolute encoder		DV0P2990	A4-154
Mounting bracket	Frame A	DV0P4271	A4-151
	Frame B	DV0P4272	
	Frame C	DV0P4273	
	Frame D	DV0P4274	
Encoder cable	MFECA0**0EAD		A4-143
	MFECA0**0EAE		
	MFECA0**0EAM		
	MFECA0**0ESD		
	MFECA0**0ESE		
Motor cable	MFMCA0**0EED		A4-144
	MFMCA0**2ECD		
	MFMCA0**3ECT		
	MFMCD0**2ECD		
	MFMCD0**2ECT		
	MFMCD0**3ECT		
Motor cable (with brake)	MFMCA0**2FCD		A4-145
	MFMCA0**2FCT		
	MFMCA0**3FCT		
Brake cable	MFMCB0**0GET		A4-145
Regenerative resistor	50 Ω, 25W	DV0P4280	A4-153
	100 Ω, 25W	DV0P4281	
	25 Ω, 50W	DV0P4282	
	50 Ω, 50W	DV0P4283	
	30 Ω, 100W	DV0P4284	
	20 Ω, 130W	DV0P4285	
Reactor		DV0P220 to DV0P228	A4-152
Noise filter		DV0P4170	A4-138
		DV0P4180	
		DV0P4220	
		DV0P3410	
Surge absorber	Single phase 100V, 200V	DV0P4190	A4-139
	3-phase 200V	DV0P1450	
Noise filter for signal wire		DV0P1460	A4-139

Note) 1. □represents the motor structure.
Note) 2. ** represents the cable length (specified value)
For details, refer to cable specifications (A4-141).
Note) 3. 7.5kW output type:1500(r/min)

Common Specifications of Driver

Basic Specifications	Input power	100V	Main circuit		Single phase, 100-115V +10% –15% 50/60Hz
			Control circuit		Single phase, 100-115V +10% –15% 50/60Hz
		200V	Main circuit	Frame A, B	Single phase, 200-240V +10% –15% 50/60Hz
				Frame C, D	Single/3-phase, 200-240V +10% –15% 50/60Hz
				Frame E to G	3-phase, 200-230V +10% –15% 50/60Hz
			Control circuit	Frame A to D	Single phase, 200-240V +10% –15% 50/60Hz
				Frame E to G	Single phase, 200-230V +10% –15% 50/60Hz
	Environment		Temperature		Operating : 0 to 55˚C, Storage : –20 to +65˚C (Max.temperature guarantee 80˚C for 72 hours <Nomal temperature>)
			Humidity		Both operating and storage : 90%RH or less (free from condensation)
			Altitude		1000m or lower
			Vibration		5.88m/s² or less, 10 to 60Hz (No continuous use at resonance frequency)
	Withstand voltage				Should be 1500VAC (Sensed current: 20mA) or higher for 1 minute between Primary and Ground.
	Control method				IGBT PWM Sinusoidal wave drive
	Encoder feedback				17-bit (131072 resolution) absolute/incremental encoder, 2500P/r (10000 resolution) incremental encoder
	Feedback scale (full-closed control only)				Made by Mitsutoyo ABS AT573A Series: Resolution(µm) 0.05, Max. Speed*(m/s) 2 ABS ST771A Series: 0.5, 5 ABS ST773A Series: 0.1, 4 ABS ST771AL Series: 0.5, 5 ABS ST773AL Series: 0.1, 4 Made by Sony Manufacturing System SR77 Series: Resolution(µm) 0.05, Max. Speed*(m/s) 2 SR87 Series: 0.05, 2 High resolution laser scales are also available. * The maximum speed depends on the driver performance. It is limited by the machine configuration and system configuration.
	Control signal		Input		10 inputs (1) Servo-ON, (2) Control mode switching, (3) Gain switching/Torque limit switching, (4) Alarm clear Other inputs vary depending on the control mode.
			Output		6 outputs (1) Servo alarm, (2) Servo ready, (3) Release signal of external brake (4) Zero speed detection, (5) Torque in-limit. Other outputs vary depending on the control mode.
	Analog signal		Input		3 inputs (16Bit A/D : 1 input, 10Bit A/D : 2 inputs)
			Output		2 outputs (for monitoring) (1) Speed monitor (Monitoring of actual motor speed or command speed is enabled. Select the content and scale with parameter.), (2) Torque monitor (Monitoring of torque command, [approx. 3V/rated torque]), deviation counter or full-closed deviation is enabled. Select the content or scale with parameter.)
	Pulse signal		Input		2 inputs Select the exclusive input for line driver or photo-coupler input with parameter.
			Output		4 outputs Feed out the encoder pulse (A, B and Z-phase) or feedback scale pulse (EXA, EXB and EXZ-phase) in line driver. Z-phase and EXZ-phase pulse is also fed out in open collector.
	Communication function		RS232		1 : 1 communication to a host with RS232 interface is enabled.
			RS485		1 : n communication up to 15 axes to a host with RS485 interface is enabled.
	Front panel				(1) 5 keys (MODE, SET, UP, DOWN, SHIFT), (2) LED (6-digit)
	Regeneration				Frame A, B, G : no built-in regenerative resistor (external resistor only) Frame C to F : Built-in regenerative resistor (external resistor is also enabled.)
	Dynamic brake				Setup of action sequence at Power-OFF, Servo-OFF, at protective function activation and over-travel inhibit input is enabled. * For G is no function.
	Control mode				Switching among the following 7 mode is enabled, (1) Position control, (2) Velocity control, (3) Toque control, (4) Position/Velocity control, (5) Position/Torque control, (6) Velocity/Torque control and (7) Full-closed control.

Functions	Position control	Control input		(1) Deviation counter clear (2) Command pulse inhibition (3) Electronic gear switching (4) Damping control switching
		Control output		(1) Positioning complete (In-position)
		Pulse input	Max. command pulse frequency	Exclusive interface for line driver : 2Mpps, Line driver : 500kpps, Open collector : 200kpps
			Input pulse signal format	Support (1) RS422 line drive signal and (2) Open collector signal from controller.
			Type of input pulse	Differential input. Selectable with parameter, ((1) CW/CCW (2) A and B-phase (3) Command and Direction)
			Electronic gear (Division/Multiplication of command pulse)	Process the command pulse frequency x $\frac{(1 \text{ to } 10000) \times 2^{(0-17)}}{1 \text{ to } 10000}$ as a position command input
			Smoothing filter	Primary delay filter or FIR type filter is selectable to the command input.
		Analog input	Torque limit command input	Individual torque limit for both CW and CCW direction is enabled. (3V/rated torque)
		Instantaneous speed observer		Usable
		Damping control		Usable
	Velocity control	Control input		(1) Speed zero clamp (2) Selection of internal speed setup (3) Gain switching or Torque limit switching input
		Control output		(1) Speed arrival (at-speed)
		Analog input	Velocity command input	Setup of scale and rotational direction of the motor against the command voltage is enabled with parameter, with the permissible max. voltage input = ± 10V and 6V/rated speed (default setup).
			Torque limit command input	Individual torque limit for both CW and CCW direction is enabled. (3V/rated torque)
		Speed control range		1 : 5000
		Internal speed command		8-speed with parameter setup
		Soft-start/down function		Individual setup of acceleration and deceleration is enabled, with 0 to 10s/1000r/min. S-shaped acceleration/deceleration is also enabled.
		Zero-speed clamp		0-clamp of internal speed command with speed zero clamp input is enabled.
		Instantaneous speed observer		Usable
		Speed command filter		Usable
	Torque control	Control input		(1) Speed zero clamp
		Control output		(1) Speed arrival (at-speed)
		Analog input	Speed command input	Setup of scale and CW/CCW torque generating direction of the motor against the command voltage is enabled with parameter, with the permissible max. voltage input = ± 10V and 3V/rated speed (default setup).
			Speed limit input	Speed limit input by analog voltage is enabled. Scale setup with parameter.
		Speed limit function		Speed limit value with parameter or analog input is enabled.
	Full-closed control	Control input		(1) Deviation counter clear (2) Command pulse input inhibition (3) Electronic gear switching (4) Damping control switching
		Control output		(1) Full-closed positioning complete (in-position)
		Pulse input	Max. command pulse frequency	Exclusive interface for line driver : 2Mpps, Line driver : 500kpps, Open collector : 200kpps
			Input pulse signal format	Differential input. Selectable with parameter ((1) CCW/CW (2) A and B-phase (3) Command and direction)
			Electronic gear (Division/Multiplication of command pulse)	Process the command pulse frequency x $\frac{(1 \text{ to } 10000) \times 2^{(0-17)}}{1 \text{ to } 10000}$ as a position command input
			Smoothing filter	Primary delay filter is adaptable to the command input.
		Analog input	Torque limit command input	Individual torque limit for both CW and CCW direction is enabled. (3V/rated torque)
		Setup range of division / multiplication of feedback scale		Setting of ratio between encoder pulse (denominator) and feedback scale pulse (numerator) is enabled within a range of (1 to 10000) x $2^{(0-17)}$ / (1 to 10000).
	Common	Auto-gain tuning	Real-time	Corresponds to load inertia fluctuation, possible to automatically set up parameters related to notch filter.
			Normal mode	Estimates load inertia and sets up an appropriate servo gain.
			Fit-gain function	Automatically searches and sets up the value which makes the fastest settling time with external command input.
		Masking of unnecessary input		Masking of the following input signal is enabled. (1) Over-travel inhibition (2) Torque limit (3) Command pulse inhibition (4) Speed-zero clamp (5) Counter clear
		Division of encoder feedback pulse		Set up of any value is enabled (encoder pulses count is the max.).
		Protective function	Soft error	Over-voltage, under-voltage, over-speed, over-load, over-heat, over-current and encoder error etc.
			Hard error	Excess position deviation, command pulse division error, and EEPROM error etc.
		Traceability of alarm data		Traceable up to past 14 alarms including the present one.
		Damping control function		Manual setup with parameter
		Setup	Manual	5push switches on front panel MODE SET △ ▽ ◁
			Setup support software	PANATERM (Supporting OS : Windows98, Windows ME, Windows2000, and WindowsXP)

Standard Wiring Example of Main Circuit

● Frame A, B

• In Case of Single Phase, 100V

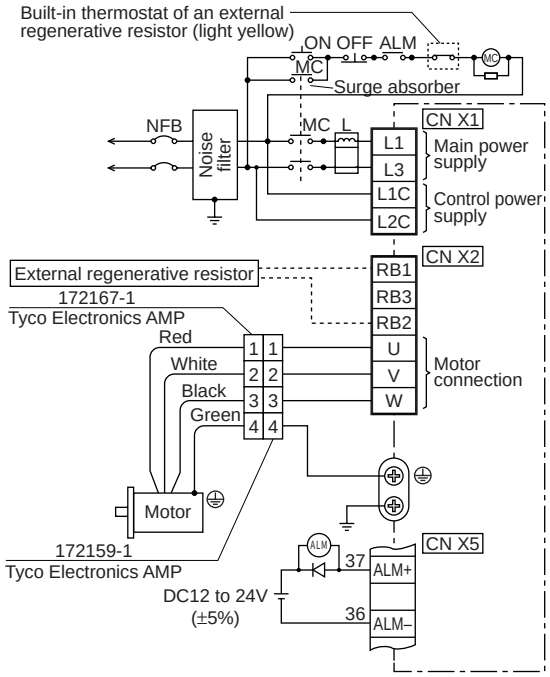

• In Case of Single Phase, 200V

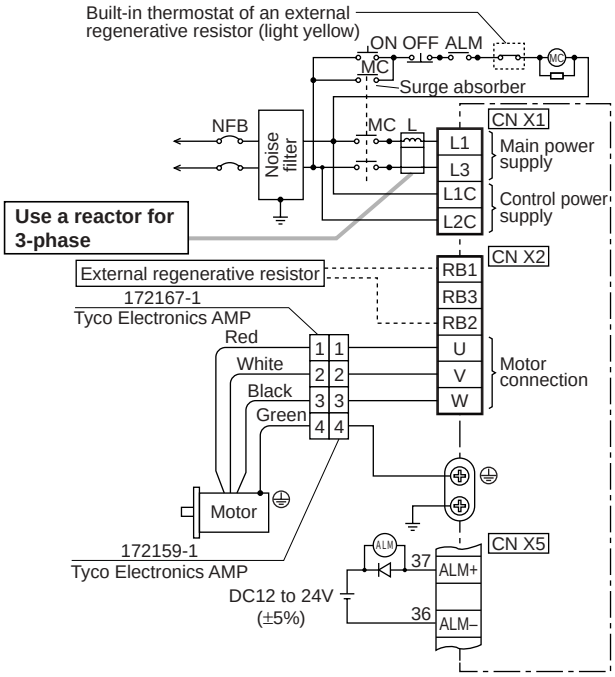

● Frame C, D

• In Case of Single Phase, 200V

<Remarks>
When you use single phase, connect the main power between L1 and L3 terminals.

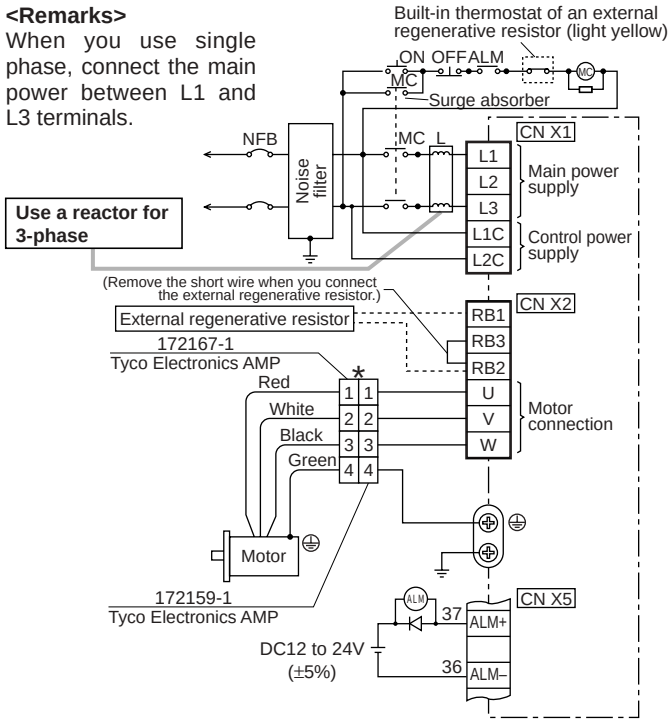

• In Case of 3-Phase, 200V

<Remarks>
When you use single phase, connect the main power between L1 and L3 terminals.

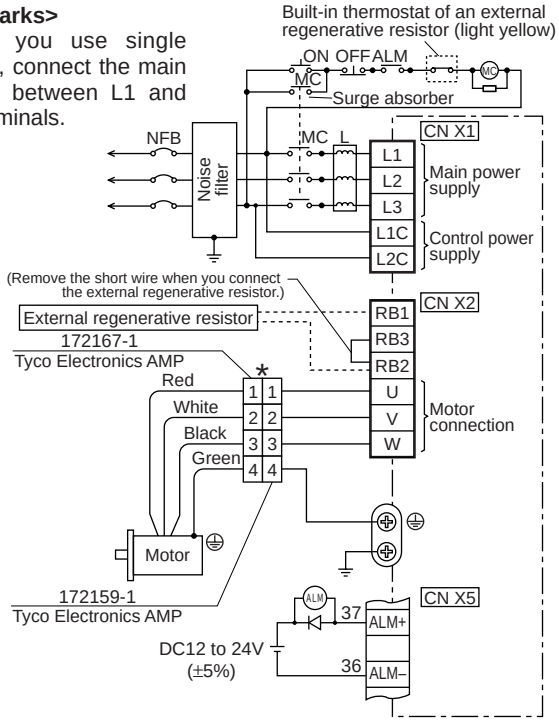

* When you use motor model of MSMA, MDMA, MFMA, MHMA and MGMA, use the connections as the right table shows..

[Motor portion]
Connector :
by Japan Aviation Electronics Ind.

<Remark>
Do not connect anything to NC.

JL04V-2E20-4PE-B-R
JL04HV-2E22-22PE-B-R

PIN No.	Application
A	U-phase
B	V-phase
C	W-phase
D	Ground

JL04V-2E20-18PE-B-R

PIN No.	Application
G	Brake
H	Brake
A	NC
F	U-phase
I	V-phase
B	W-phase
E	Ground
D	Ground
C	NC

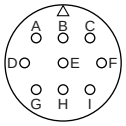

JL04V-2E24-11PE-B-R

PIN No.	Application
A	Brake
B	Brake
C	NC
D	U-phase
E	V-phase
F	W-phase
G	Ground
H	Ground
I	NC

● Frame E, F

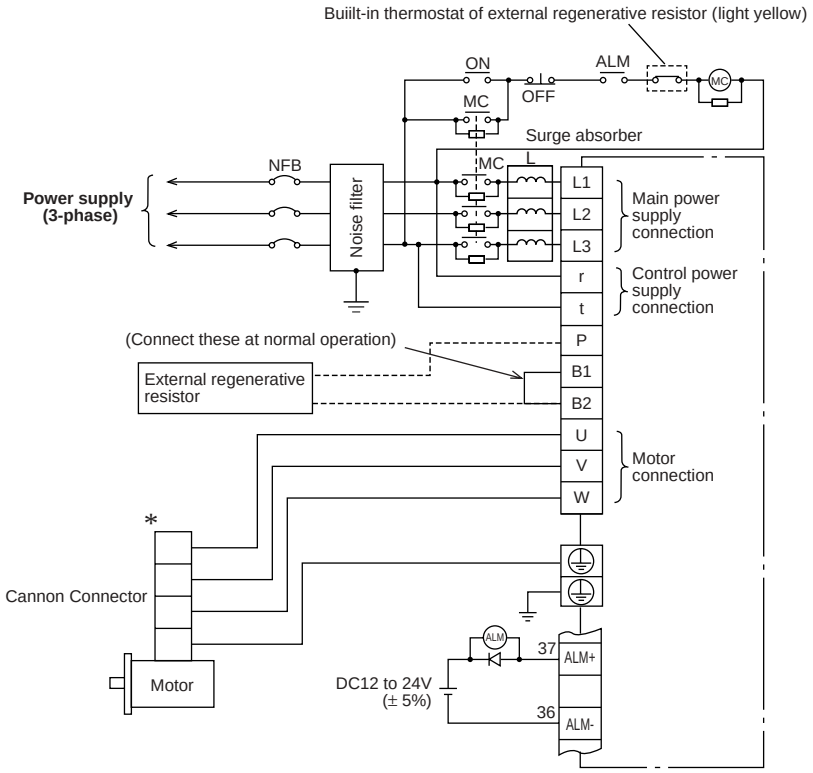

* One of the connections shown right applies according to series of the motor. Refer to "Connector and Plug Specifications" on page A4-142.

[Motor portion]

JL04V-2E20-4PE-B-R
JL04HV-2E22-22PE-B-R

PIN No.	Application
A	U-phase
B	V-phase
C	W-phase
D	Ground

JL04V-2E20-18PE-B-R

PIN No.	Application
G	Brake
H	Brake
A	NC
F	U-phase
I	V-phase
B	W-phase
E	Ground
D	Ground
C	NC

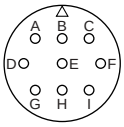

JL04V-2E24-11PE-B-R

PIN No.	Application
A	Brake
B	Brake
C	NC
D	U-phase
E	V-phase
F	W-phase
G	Ground
H	Ground
I	NC

<Remark> Do not connect anything to NC.

● Frame G

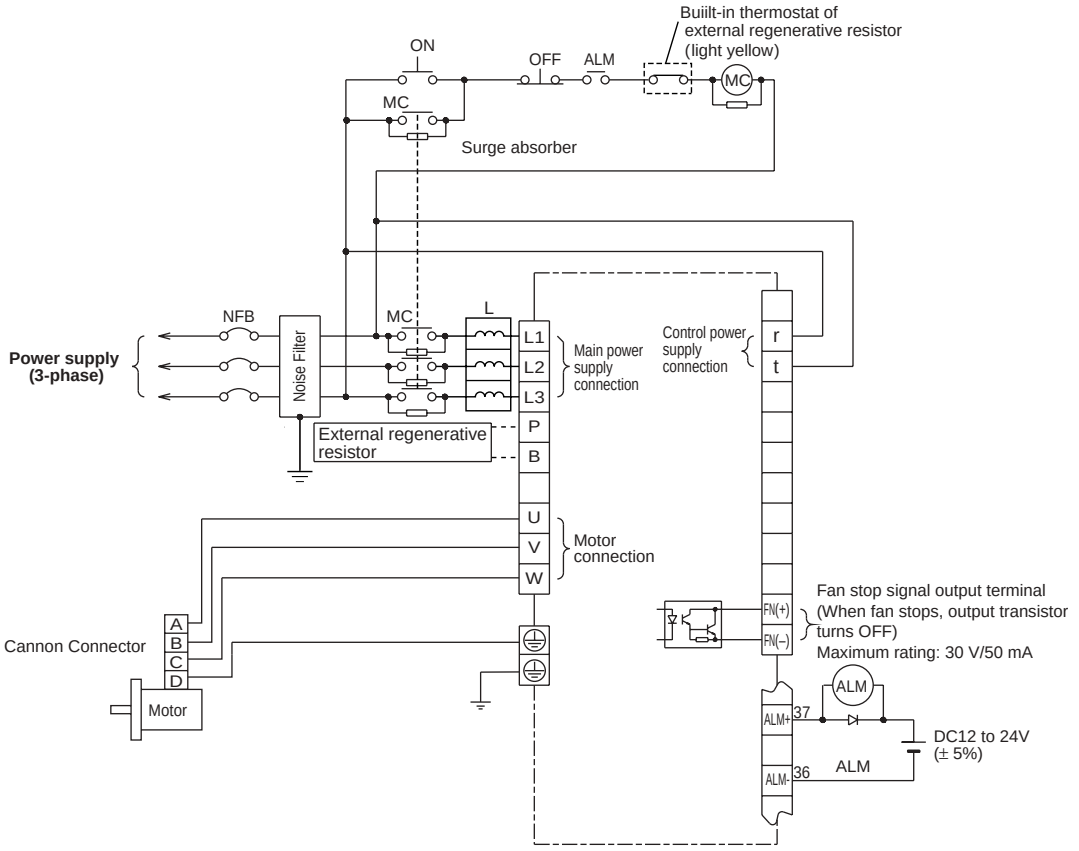

[Motor portion]

JL04V-2E32-17PE-B-R

PIN No.	Application
A	U-phase
B	V-phase
C	W-phase
D	Ground

[with brake]

N/MS3102A14S-2P

PIN No.	Application
A	Brake
B	Brake
C	NC
D	NC

<Remark>
Do not connect anything to NC.

Encoder Wiring Diagram

● 2500P/r Incremental encoder

Motor MAMA, MSMD and MQMA series

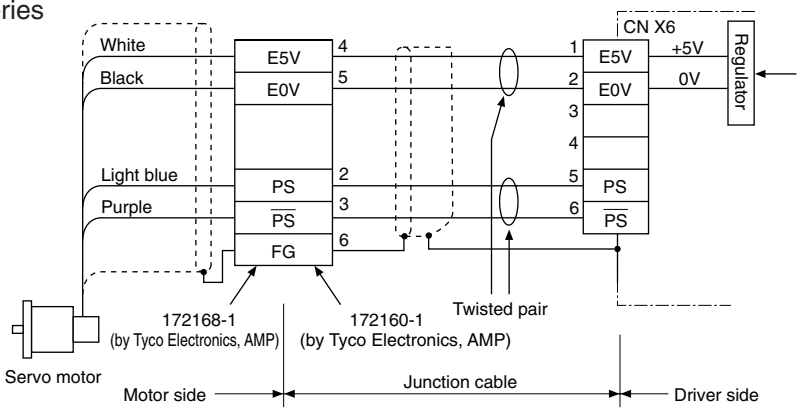

Motor MSMA, MDMA
and MFMA, MGMA series

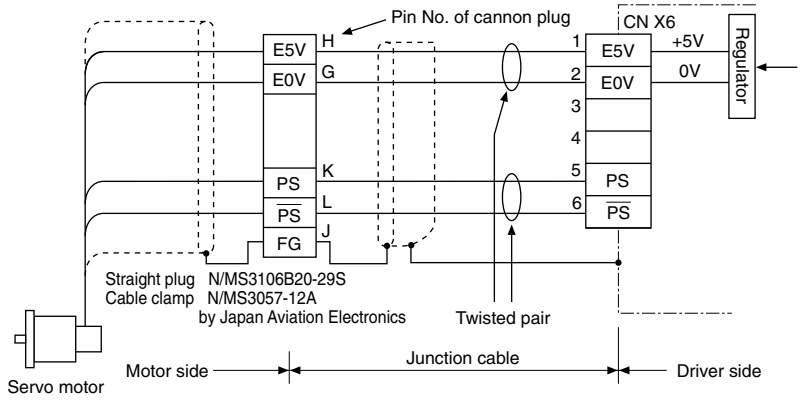

● 17bit Absolute/ Incremental common encoder

Motor MAMA, MSMD and MQMA series

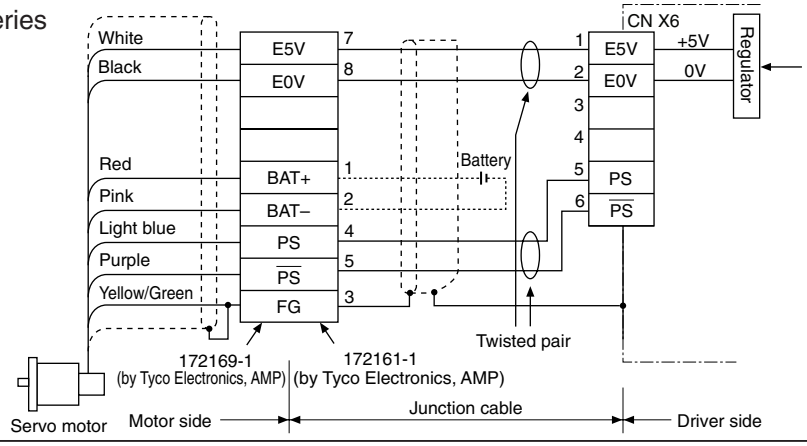

Motor MSMA, MDMA
and MFMA, MGMA series

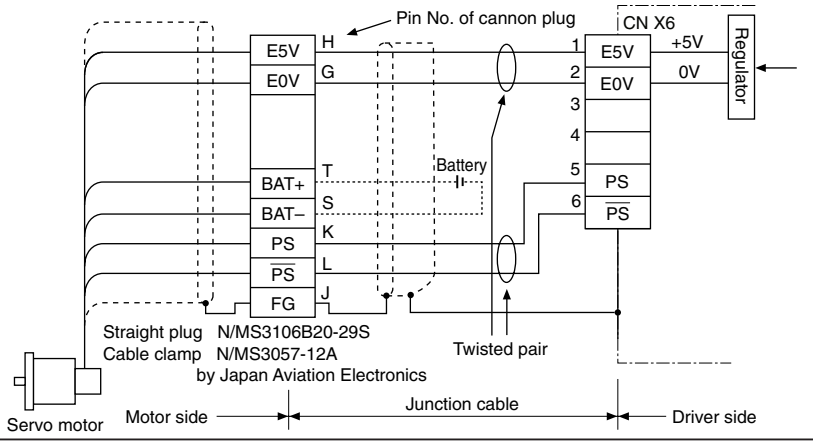

Standard Wiring Example of Control Circuit

● Wiring examples at each control mode

● CN X5 Wiring example at position control mode

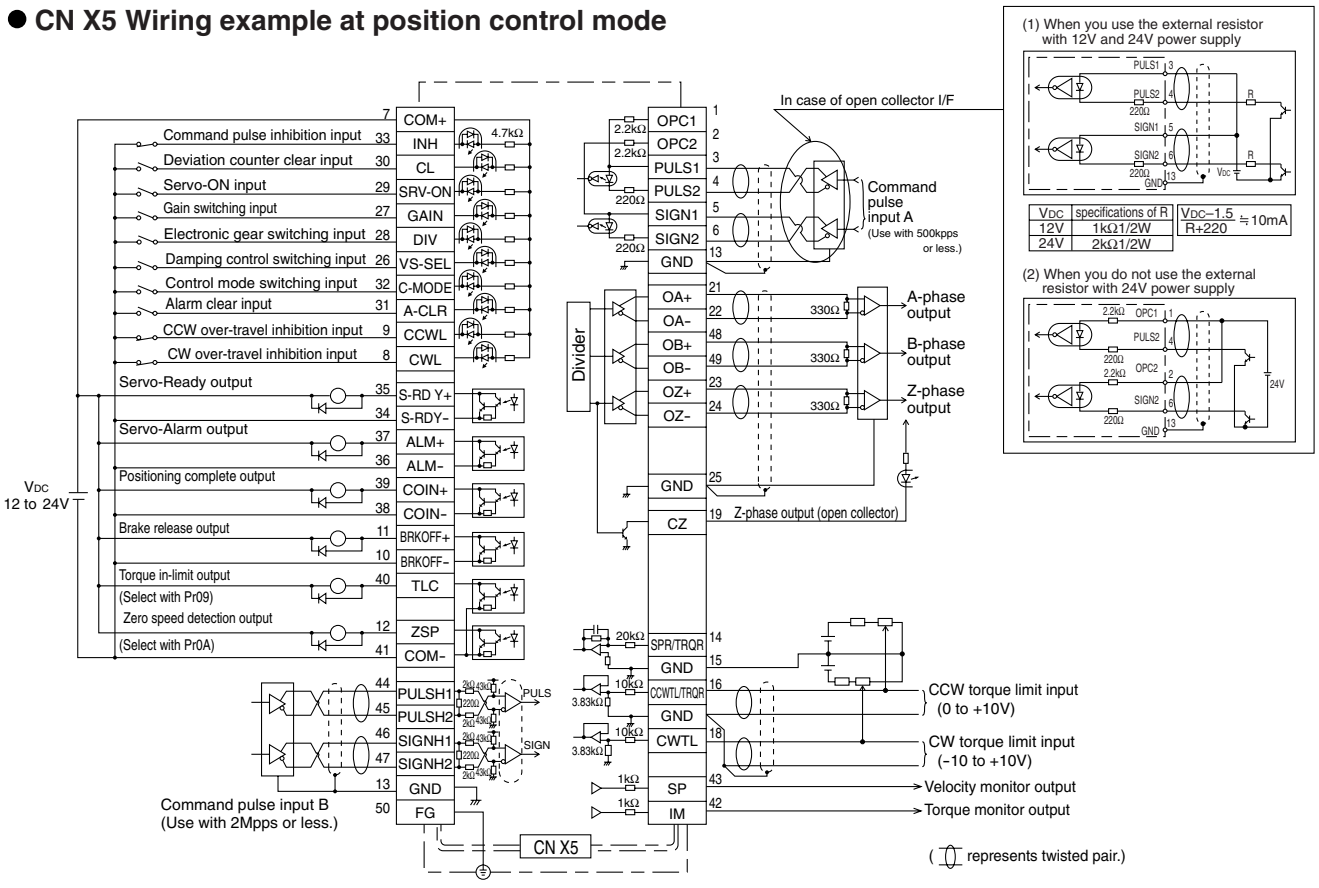

● CN X5 Wiring example at velocity control mode

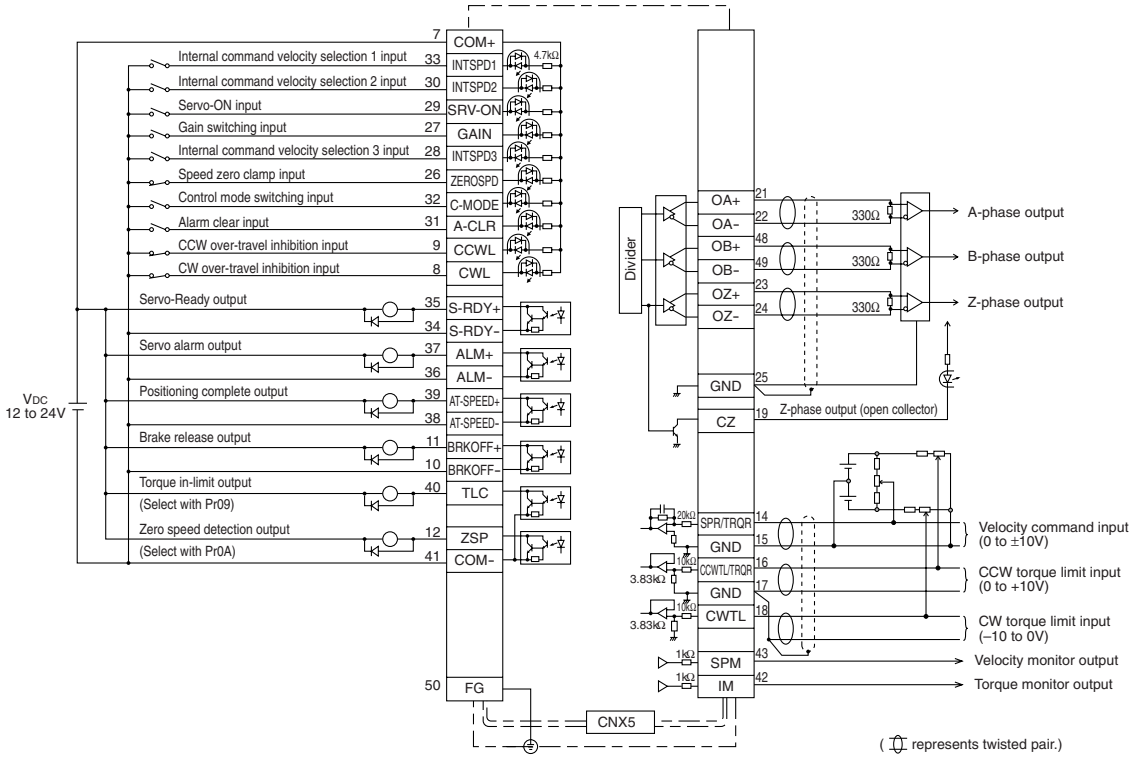

Standard Wiring Example of Control Circuit

● **CN X5 Wiring example at torque control mode**

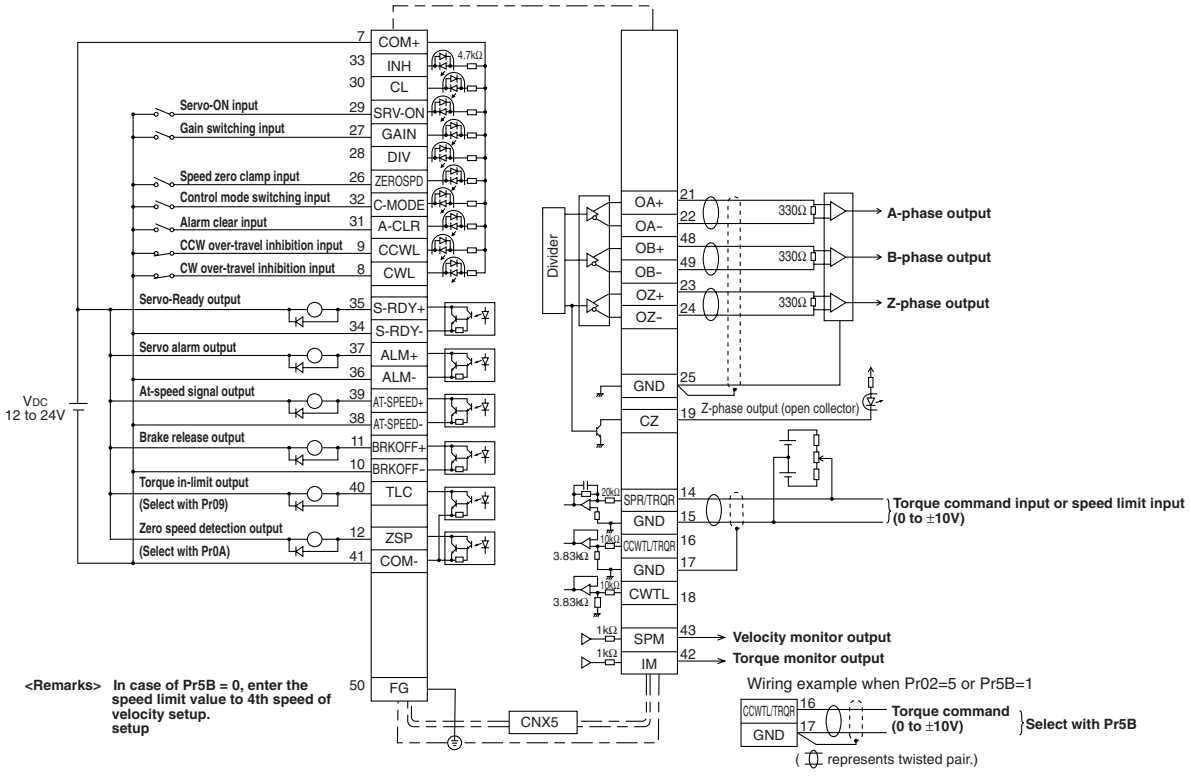

Table of Applicable Motors

Driver		Motor series							
Frame symbol	Part No.	MAMA	MSMD	MQMA	MSMA	MDMA	MGMA	MFMA	MHMA
A-frame	MADDT1105		MSMD5AZ***						
	MADDT1107		MSMD011***	MQMA011***					
	MADDT1205		MSMD5AZ*** MSMD012***	MQMA012***					
	MADDT1207	MAMA012***	MSMD022***	MQMA022***					
B-frame	MBDDT2110		MSMD021***	MQMA021***					
	MBDDT2210	MAMA022***	MSMD042***	MQMA042***					
C-frame	MCDDT3120		MSMD041***	MQMA041***					
	MCDDT3520	MAMA042***	MSMD082***					MFMA042***	MHMA052***
D-frame	MDDDT3530					MDMA102***			MHMA102***
	MDDDT5540	MAMA082***			MSMA102*** MSMA152***	MDMA152***	MGMA092***	MFMA152***	MHMA152***
E-frame	MEDDT7364				MSMA202***	MDMA202***		MFMA252***	MHMA202***
F-frame	MFDDTA390				MSMA302***	MDMA302***	MGMA202***		MHMA302***
	MFDDTB3A2				MSMA402*** MSMA502***	MDMA402*** MDMA502***	MGMA302*** MGMA452***	MFMA452***	MHMA402*** MHMA502***
G-frame	MGDDTC3B4					MDMA752***	MGMA602***		MHMA752***

Refer to page, A4-13, Table of Part Numbers and Options as well.

Driver/Dimensions

Frame A

[unit: mm]

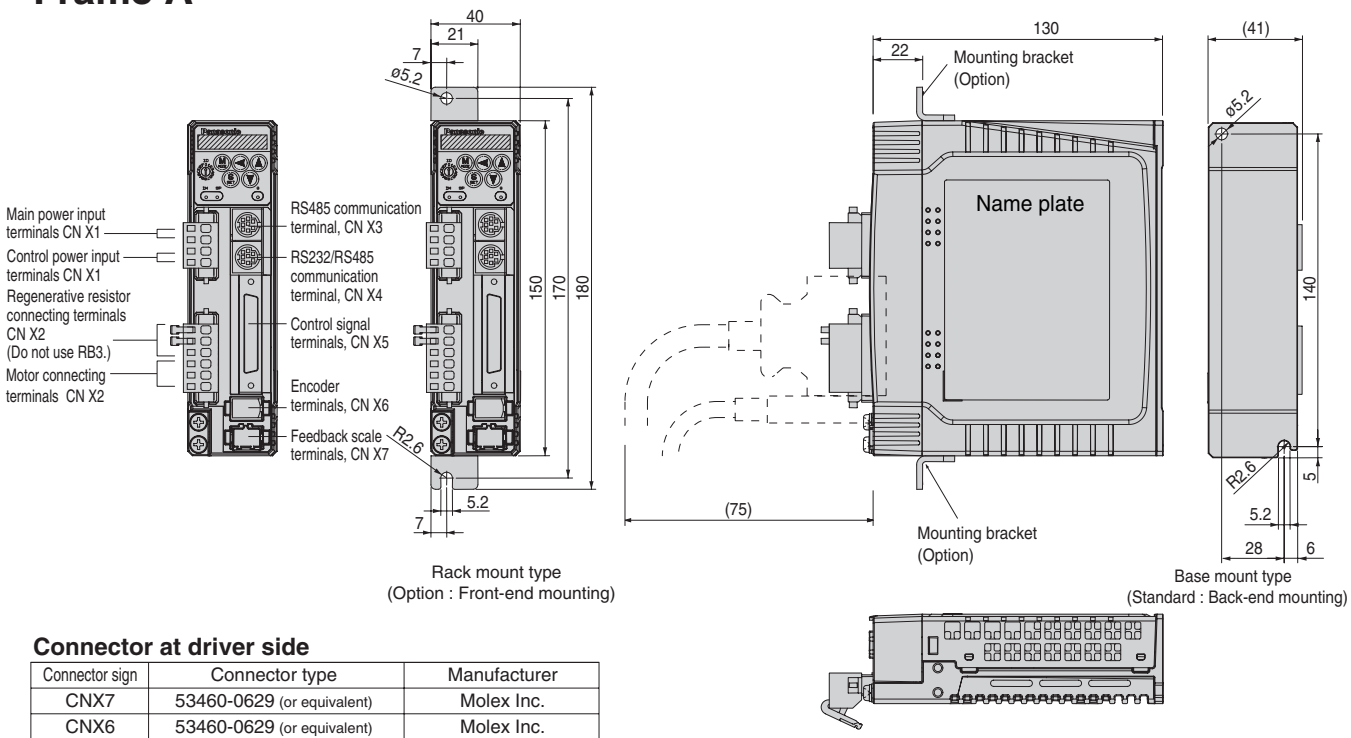

Connector at driver side

Connector sign	Connector type	Manufacturer
CNX7	53460-0629 (or equivalent)	Molex Inc.
CNX6	53460-0629 (or equivalent)	Molex Inc.
CNX5	529865079 (or equivalent)	Molex Inc.
CNX4	MD-S8000-10 (or equivalent)	J.S.T. Mfg.Co., Ltd.
CNX3	MD-S8000-10 (or equivalent)	J.S.T. Mfg.Co., Ltd.
CNX2	S06B-F32SK-GGXR (or equivalent)	J.S.T. Mfg.Co., Ltd.
CNX1	S04B-F32SK-GGXR (or equivalent)	J.S.T. Mfg.Co., Ltd.

Connector at Power Supply and Motor side

Connector sign	Connector type	Manufacturer
CNX2	06JFAT-SAXGF (or equivalent)	J.S.T. Mfg.Co., Ltd.
CNX1	04JFAT-SAXGF (or equivalent)	J.S.T. Mfg.Co., Ltd.

Mass 0.8kg

Frame B

[unit: mm]

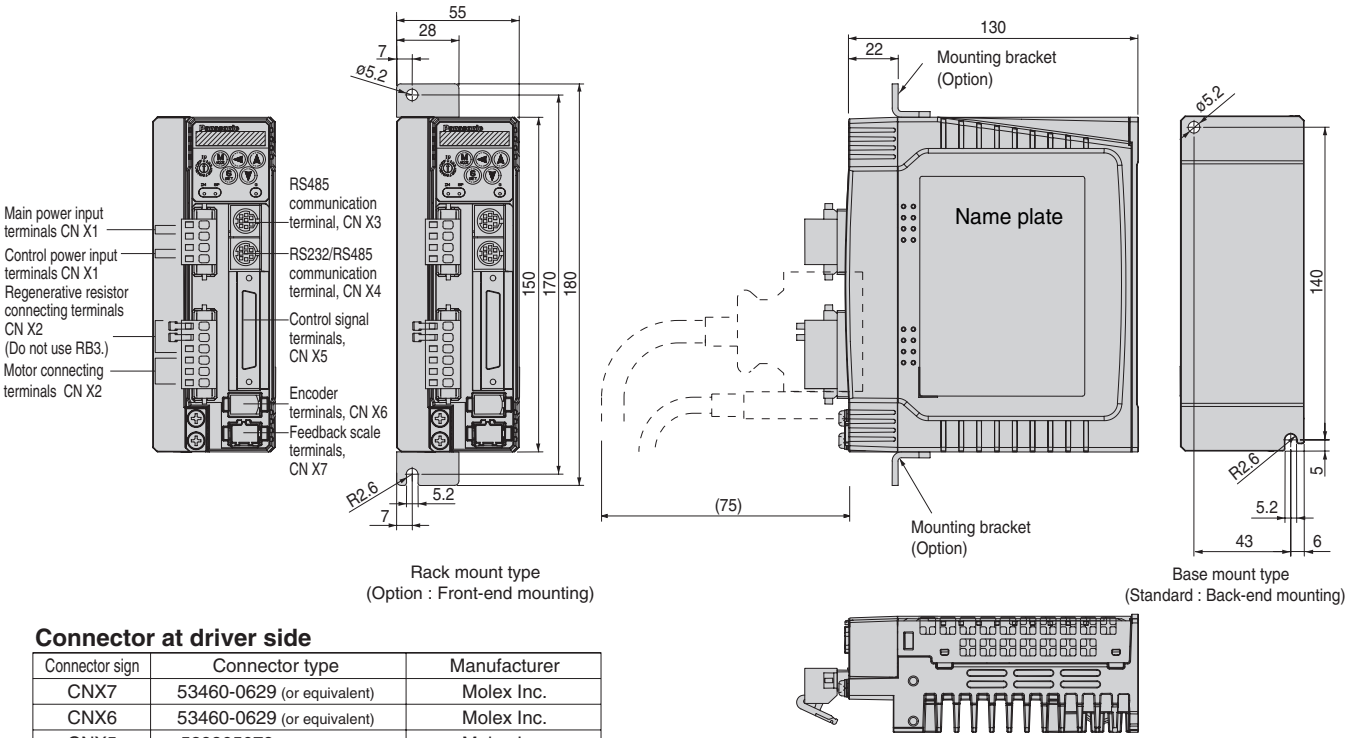

Connector at driver side

Connector sign	Connector type	Manufacturer
CNX7	53460-0629 (or equivalent)	Molex Inc.
CNX6	53460-0629 (or equivalent)	Molex Inc.
CNX5	529865079 (or equivalent)	Molex Inc.
CNX4	MD-S8000-10 (or equivalent)	J.S.T. Mfg.Co., Ltd.
CNX3	MD-S8000-10 (or equivalent)	J.S.T. Mfg.Co., Ltd.
CNX2	S06B-F32SK-GGXR (or equivalent)	J.S.T. Mfg.Co., Ltd.
CNX1	S04B-F32SK-GGXR (or equivalent)	J.S.T. Mfg.Co., Ltd.

Connector at Power Supply and Motor side

Connector sign	Connector type	Manufacturer
CNX2	06JFAT-SAXGF (or equivalent)	J.S.T. Mfg.Co., Ltd.
CNX1	04JFAT-SAXGF (or equivalent)	J.S.T. Mfg.Co., Ltd.

Mass 1.1kg

Driver/Dimensions

Frame C

[unit: mm]

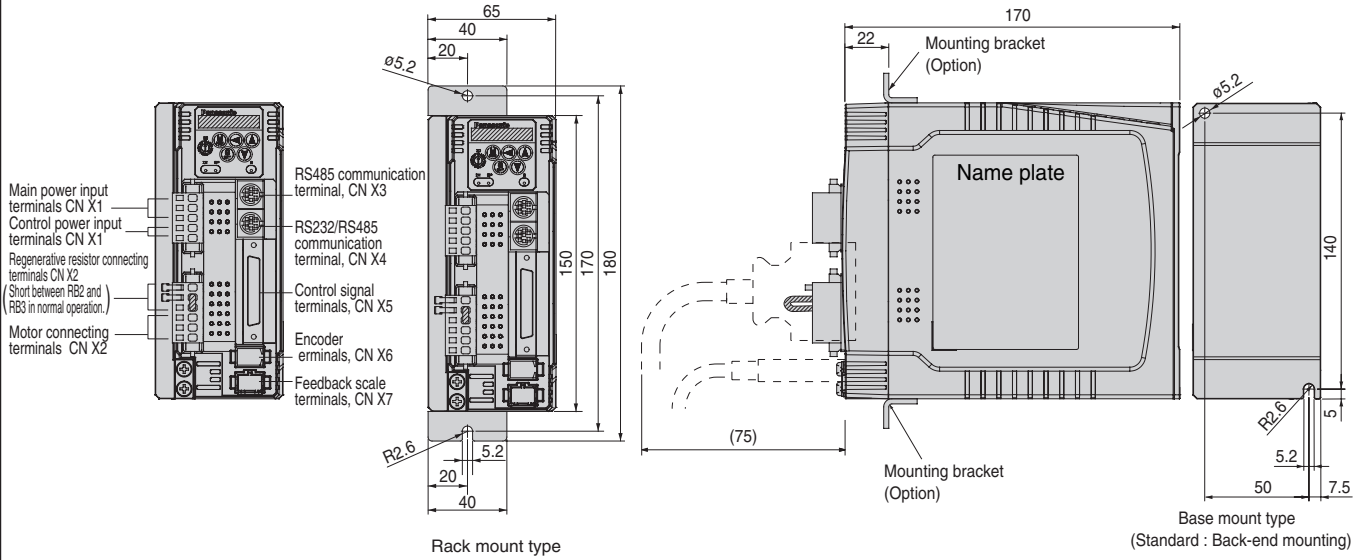

Connector at driver side

Connector sign	Connector type	Manufacturer
CNX7	53460-0629 (or equivalent)	Molex Inc.
CNX6	53460-0629 (or equivalent)	Molex Inc.
CNX5	529865079 (or equivalent)	Molex Inc.
CNX4	MD-S8000-10 (or equivalent)	J.S.T. Mfg.Co., Ltd.
CNX3	MD-S8000-10 (or equivalent)	J.S.T. Mfg.Co., Ltd.
CNX2	S06B-F32SK-GGXR (or equivalent)	J.S.T. Mfg.Co., Ltd.
CNX1	S05B-F32SK-GGXR (or equivalent)	J.S.T. Mfg.Co., Ltd.

Connector at Power Supply and Motor side

Connector sign	Connector type	Manufacturer
CNX2	06JFAT-SAXGF (or equivalent)	J.S.T. Mfg.Co., Ltd.
CNX1	05JFAT-SAXGF (or equivalent)	J.S.T. Mfg.Co., Ltd.

Mass 1.5kg

Frame D

[unit: mm]

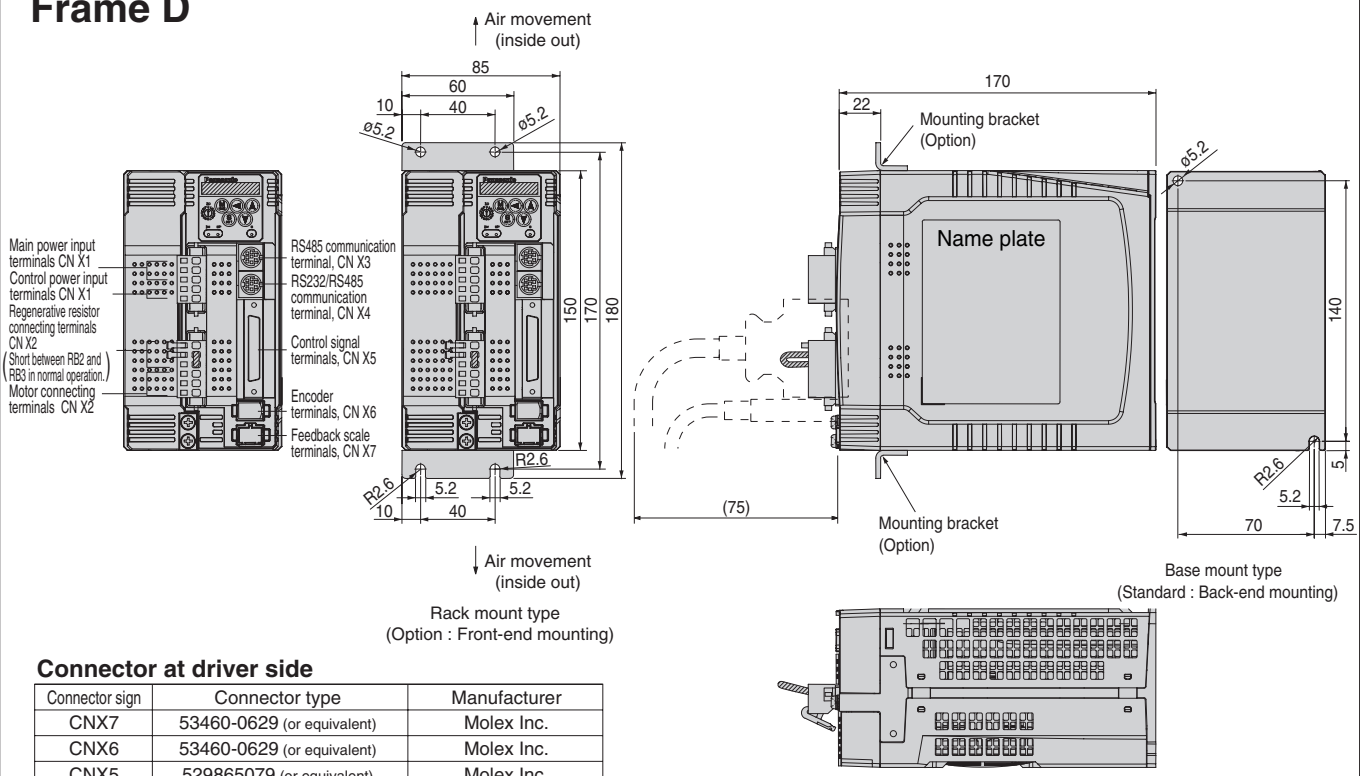

Connector at driver side

Connector sign	Connector type	Manufacturer
CNX7	53460-0629 (or equivalent)	Molex Inc.
CNX6	53460-0629 (or equivalent)	Molex Inc.
CNX5	529865079 (or equivalent)	Molex Inc.
CNX4	MD-S8000-10 (or equivalent)	J.S.T. Mfg.Co., Ltd.
CNX3	MD-S8000-10 (or equivalent)	J.S.T. Mfg.Co., Ltd.
CNX2	S06B-F32SK-GGXR (or equivalent)	J.S.T. Mfg.Co., Ltd.
CNX1	S05B-F32SK-GGXR (or equivalent)	J.S.T. Mfg.Co., Ltd.

Connector at Power Supply and Motor side

Connector sign	Connector type	Manufacturer
CNX2	06JFAT-SAXGF (or equivalent)	J.S.T. Mfg.Co., Ltd.
CNX1	05JFAT-SAXGF (or equivalent)	J.S.T. Mfg.Co., Ltd.

Mass 1.7kg

Frame E

[unit: mm]

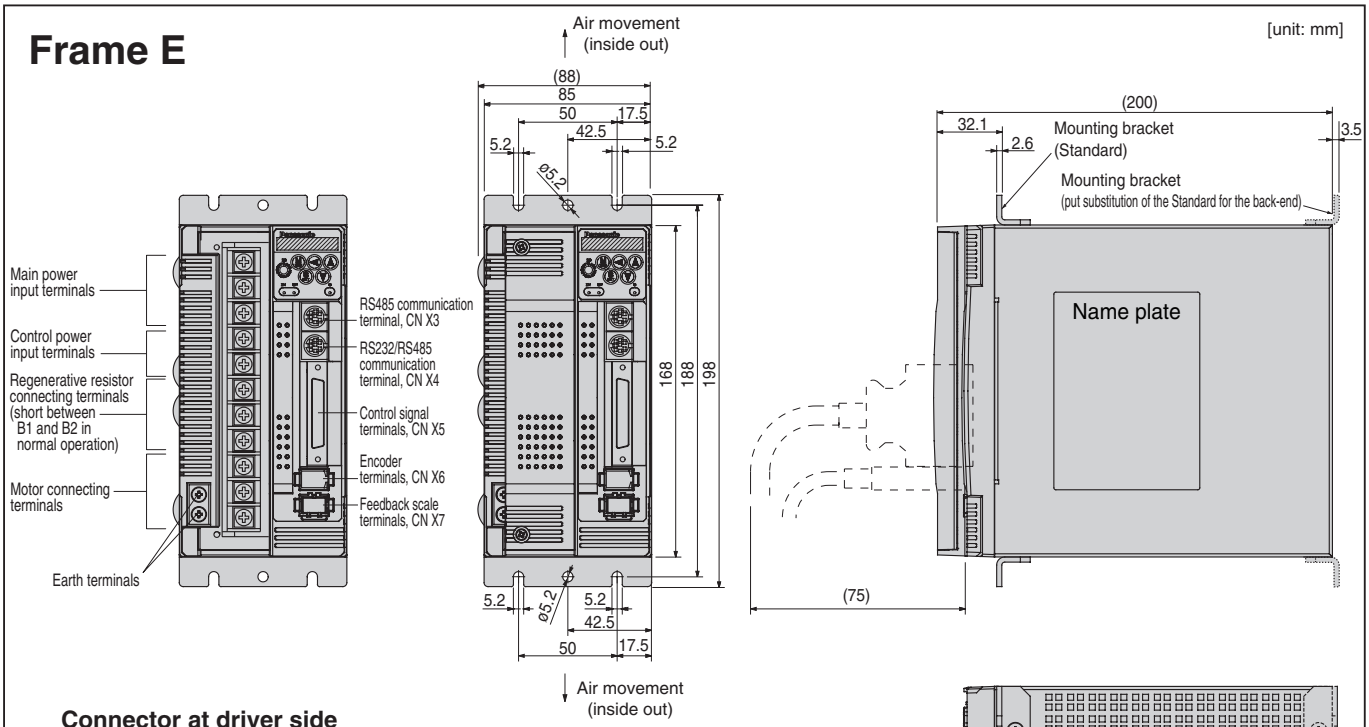

Connector at driver side

Connector sign	Connector type	Manufacturer
CNX7	53460-0629 (or equivalent)	Molex Inc.
CNX6	53460-0629 (or equivalent)	Molex Inc.
CNX5	529865079 (or equivalent)	Molex Inc.
CNX4	MD-S8000-10 (or equivalent)	J.S.T. Mfg.Co., Ltd.
CNX3	MD-S8000-10 (or equivalent)	J.S.T. Mfg.Co., Ltd.

Mass 3.2kg

Frame F

[unit: mm]

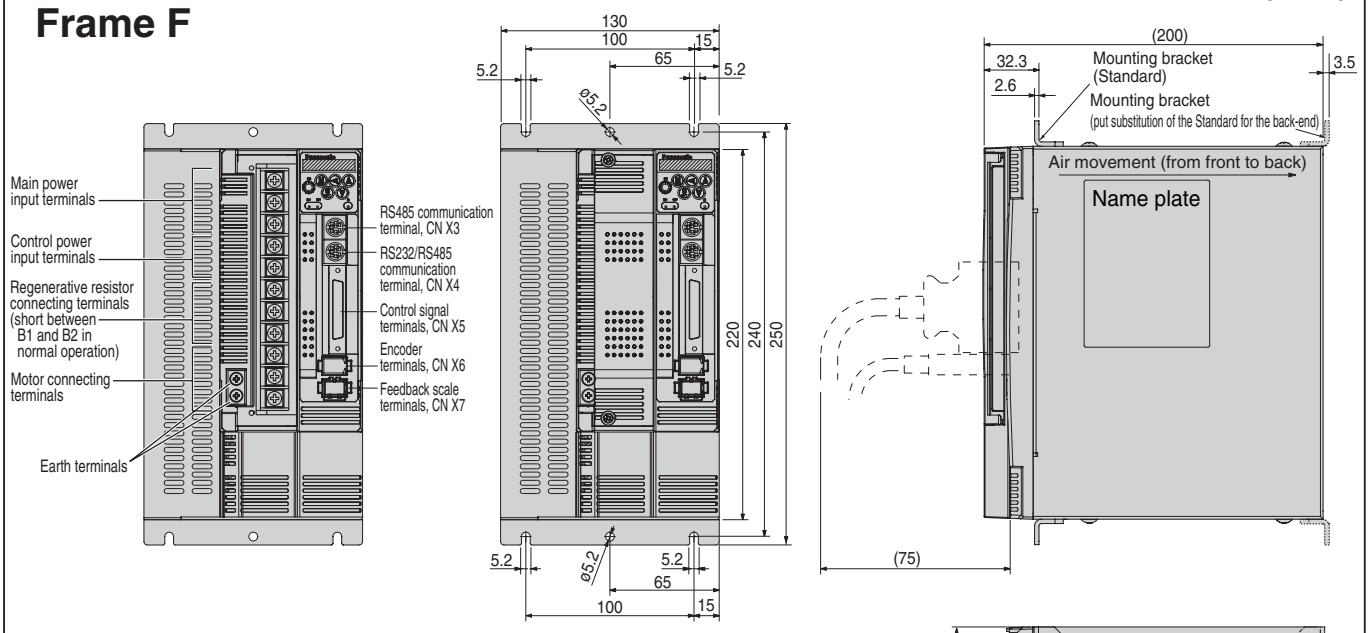

Connector at driver side

Connector sign	Connector type	Manufacturer
CNX7	53460-0629 (or equivalent)	Molex Inc.
CNX6	53460-0629 (or equivalent)	Molex Inc.
CNX5	529865079 (or equivalent)	Molex Inc.
CNX4	MD-S8000-10 (or equivalent)	J.S.T. Mfg.Co., Ltd.
CNX3	MD-S8000-10 (or equivalent)	J.S.T. Mfg.Co., Ltd.

Mass 6.0kg

Driver/Dimensions

Frame G

[unit: mm]

[Terminal block cover B opened]

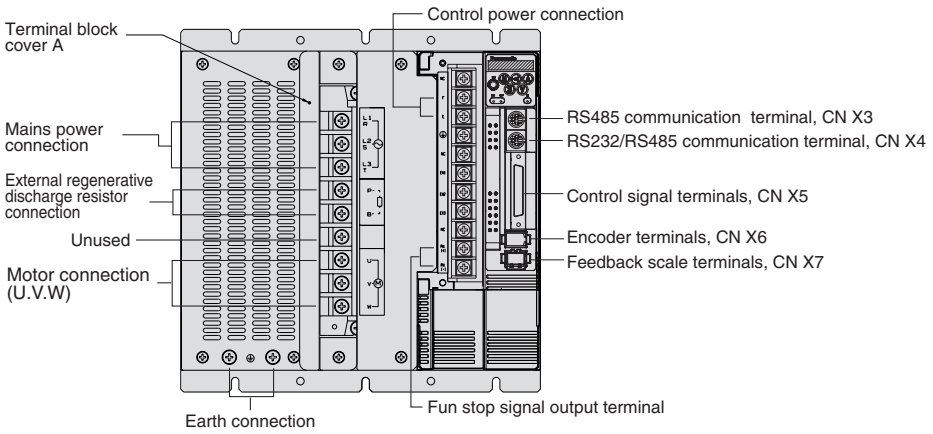

[Terminal block cover B closed]

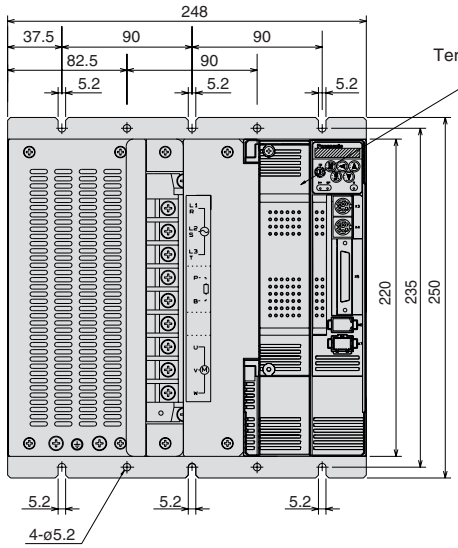

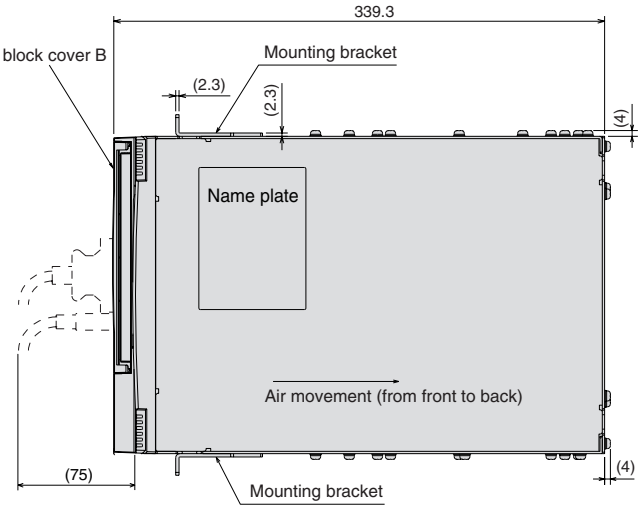

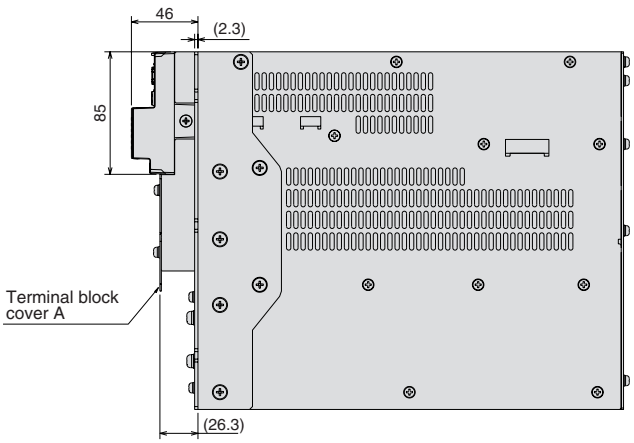

Connector at driver side

Connector sign	Connector type	Manufacturer
CNX7	53460-0629 (or equivalent)	Molex Inc.
CNX6	53460-0629 (or equivalent)	Molex Inc.
CNX5	529865079 (or equivalent)	Molex Inc.
CNX4	MD-S8000-10 (or equivalent)	J.S.T. Mfg.Co., Ltd.
CNX3	MD-S8000-10 (or equivalent)	J.S.T. Mfg.Co., Ltd.

Mass 17.0kg

High-precision Full-closed Circuit Servo

MINAS A4F Series

Perfect choice for full-closed control A-phase, B-phase feedback scale feedback can be set up

Advanced Gain Tuning

- Further Evolution in Real-Time Auto-Gain Tuning.

Agile and Intelligent

- Improved Damping Control handles all types of machines, from low to high stiffness machines with simple but solid operation.

Amazingly slim size

- Another Evolution in down-sizing, by 25% in size. (compared to A-series)

• This product is for industrial equipment. Don't use this product at general household.

Details of Features

1. Further Adjustment-Free Operation

High-functionality Real-Time Auto-Gain Tuning

- Corresponds to even variation of load inertia. Offers real automatic gain tuning to low and high stiffness machines with a combination of an adaptive filter.
- Supports the vertical axis application where the load torque is different in rotational direction.
- Prevents the machine from over-traveling during automatic gain tuning with over-travel detecting function.
- Enables you to set and check while monitoring real-time automatic gain tuning conditions on the front panel.
- Real time high precision automatic tuning offers quick positioning of low stiffness machines, e.g. machine driven by belt, resonating machines, and high stiffness machines, e.g. machine driven by short ball screw.

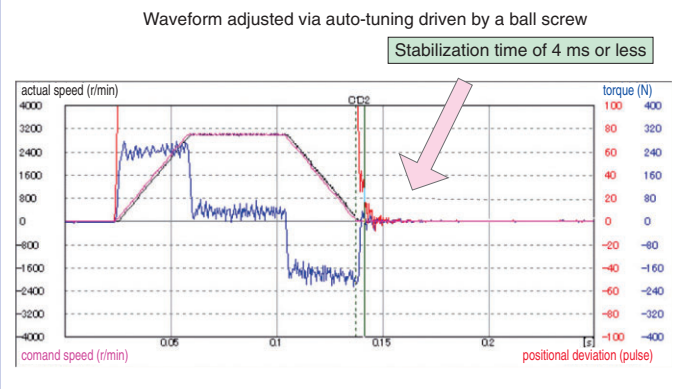

2. Further Reduction of Vibration

Adaptive filter

- Makes the notch filter frequency automatically follow the machine resonance frequency.
- Suppression of "Judder" noise of the machine can be expected which is caused by variation of the machines or resonance frequency due to aging.

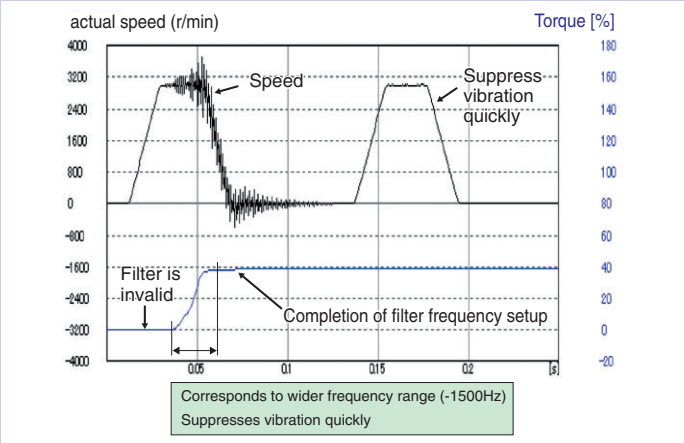

2-channel notch filters

- 2-channel notch filters are equipped in the driver independent from adaptive filter.
- You can set up both frequency and width for each of 2 filters, and set up frequency in unit of 1Hz.
- Suppression of "Judder" noise of the machine which has multiple resonance points can be expected

Effect of notch filter

without notch filter

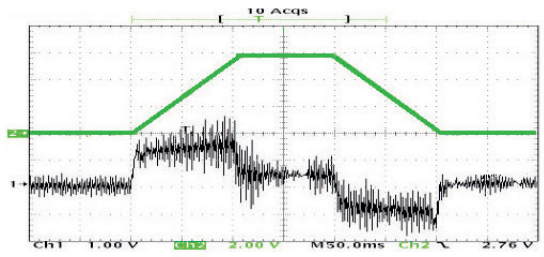

50ms/div

speed (1000r/min/div)

torque (33.3%/div)

with notch filter

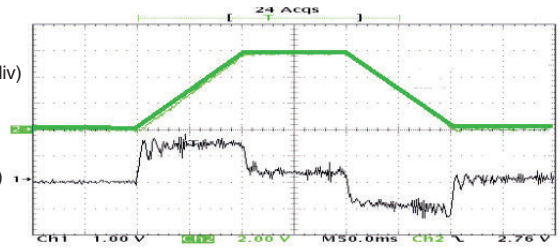

50ms/div

Damping control

- 2-channel damping filters are equipped in this driver. You can suppress vibration occurring at both starting and stopping in low stiffness machine, by manually setting up vibration frequency in 0.1Hz unit.
- You can also switch the vibration frequency set by 2-channel with rotating direction or with an external input to correspond to the variation of vibration frequency caused by the machine position.
- Easy setup with entry of only frequency and filter value. Improper setup values do not result in unstable operation

motor movement

machine movement

without damping control

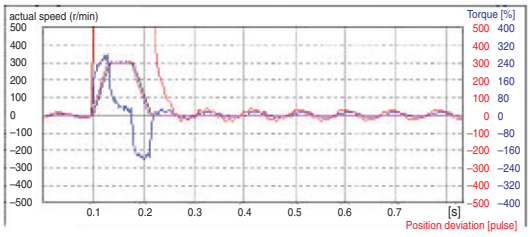

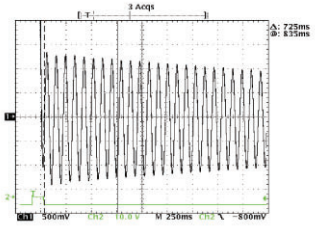

with damping control

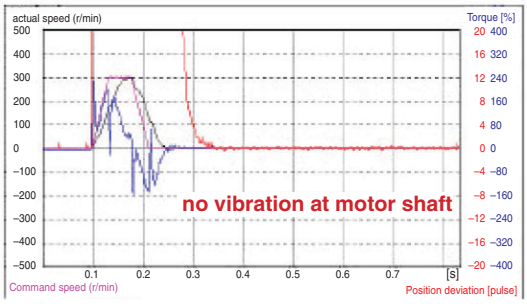

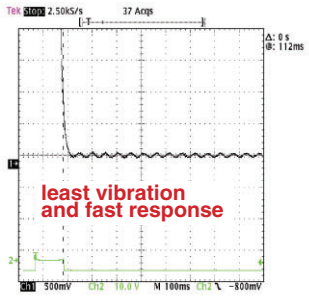

3. Further Flexibility and Multiplicity

Full-closed control (High precision positioning)

- Velocity response (bandwidth) of 1000Hz.
  Damping control, Position command pulse 4Mpps.
- Position/Speed/Torque/Full-closed control.
- Feedback scale pulse (A-phase, B-phase) feedback can be connected.

Setup support with substantial monitoring function

- Faster communication speed of RS232/RS485 (Max.57600bps) establishes an easy and comfortable operating condition for setup support software, "PANATERM".
- Displays the factors of no-motor run and helps you to analyze the causes of troubles.
- You can set up the panel operation lock to inhibit the operation from the front panel, thus enables you to prevent miss-operation such as unintentional change of parameters.

*Note) Refer to page "F2" for setup support software.

Monitoring function with front panel

- LED display and analog monitor terminals are installed in the front panel.
- Displays "Motor speed" , "Motor torque" Position deviation" , "Motor load factor" and "Regeneration load factor" on LED.
- You can monitor "Motor speed" ,"Motor torque" and "Position deviation" through analog monitor terminals.

Trial run (JOG)

- Features the function for trial (JOG) run through the front panel or console (option) without connecting to a host controller.
- You can shorten the machine setup time.

Inrush current suppressing function

- Inrush current suppressing resistor is equipped in this driver, which prevents the circuit breaker shutdown of the power supply caused by inrush current at power-on.
- Prevents unintentional shutdown of the power supply circuit breaker in multi-axes application and does not give load to the power line.

Regeneration discharging function

- Discharges the regenerative energy with resistor, which energy is generated while stopping the load with large moment of inertia, or use in up-down operation, and is returned to the driver from the motor.
- No regeneration discharge resistor is built-in to Frame A driver (MADDT1105F type.), Frame B driver (MBDDT2210F type.) and Frame G driver (MGDDTC3B4F type.) and we recommend you to connect optional regenerative resistor.
- Regenerative resistor is built-in to Frame C to F drivers, however, connection of the optional regenerative resistor bring you further regenerative capability.

Built-in dynamic brake

- You can select the dynamic brake action which short the servo motor windings of U, V and W, at Servo-OFF, CW/CCW over-travel inhibition, power shutdown and trip.
- You can select the action sequence setup depending on the machine requirement.

Setup support software

- With the setup support software, "PANATERM" via RS232/RS485 communication port, you can monitor the running status of the driver and set up parameters.
- You can read out the absolute position data of the motor with absolute encoder.

Wave-form graphic function

- With the setup support software, "PANATERM" , you can monitor the "Command speed" , "Actual speed" ,"Torque" , "Position deviation " and "Positioning complete signal" .
- Helps you to analyze the machine and shorten the setup time

*Note) Refer to page "F2" for setup support software.

Torque limit value switching

- You can setup 2 torque limits and use them for tension control or press & hold control.
- It is possible to apply it to bumping homing.

SEMI F47 voltage sag immunity

- Features the function which complies to voltage sag immunity standard of SEMI F47 at no load or light load.
- Useful for semiconductor industry.

Notes)
1) Not applicable to single phase, 100V type.
2) Verify with the actual machine condition to F47, voltage sag immunity standard.

Frequency analyzing function

- You can confirm the response frequency characteristics of total machine mechanism including the servo motor with the setup support software, "PANATERM"
- Helps you to analyze the machine and shorten the setup time

*Note) Refer to page "F2" for setup support software.

Applicable overseas safety standards

Subject	Standard conformed		
Motor	IEC60034-1 IEC60034-5 UL1004 CSA22.2 No.100		Conforms to Low-Voltage Directives
Motor and driver	EN50178 UL508C CSA22.2 No.14		
	EN55011	Radio Disturbance Characteristics of Industrial, Scientific and Medical (ISM) Radio-Frequency Equipment	Conforms to references by EMC Directives
	EN61000-6-2	Immunity for Industrial Environments	
	IEC61000-4-2	Electrostatic Discharge Immunity Test	
	IEC61000-4-3	Radio Frequency Electromagnetic Field Immunity Test	
	IEC61000-4-4	Electric High-Speed Transition Phenomenon/ Burst Immunity Test	
	IEC61000-4-5	Lightening Surge Immunity Test	
	IEC61000-4-6	High Frequency Conduction Immunity Test	
	IEC61000-4-11	Instantaneous Outage Immunity Test	

I E C : International Electrotechnical Commission
E N : Europaischen Normen
EMC : Electromagnetic Compatibility
U L : Underwriters Laboratories
CSA : Canadian Standards Association

Pursuant to at the directive 2004/108/EC,article 9(2)

Panasonic Testing Centre
Panasonic Service Europe,
a division of Panasonic Marketing Europe GmbH
Winsbergring 15,22525 Hamburg,F.R.Germany

* When export this product, follow statutory provisions of the destination country.

Motor Line-up

	Motor series *	Rated output (kW)	Rated rotational speed (Max. speed) (r/min)	Rotary encoder		Brake	Gear	CE/UL	Enclosure	Features	Applications
				2500P/r incremental	17bit absolute/ incremental	Holding	High precision				
Ultra low inertia	MAMA	0.1-0.75 4 models 0.1, 0.2, 0.4 and 0.75	5000 (6000)	○	○	○	—	○	IP65 (Except shaft through hole and connector)	·Small capacity ·Suitable for the machines directly coupled with high speed ball screw and high stiffness and high repetitive application	·SMT machines ·Inserters ·High repetitive positioning application
Low inertia	MSMD	0.05-0.75 5 models 0.05, 0.1, 0.2, 0.4 and 0.75	3000 (5000) *For 400W/100V and 750W 3000 (4500)	○	○	○	○	○	IP65 (Except shaft through hole and connector)	·Small capacity ·Suitable for all applications	·Inserters ·Belt driven machines ·Unloading robot
	MQMA (Cube type)	0.1-0.4 3 models 0.1, 0.2, and 0.4	3000 (5000) *For 400W/100V 3000 (4500)	○	○	○	—	○	IP65 (Except shaft through hole and connector)	·Small capacity ·Suitable for flat type and low stiffness machines with belt driven	·SMT machines ·Inserters ·Belt driven machines ·Unloading robot
	MSMA	1.0-5.0 6 models 1.0,1.5,2.0, 3.0,4.0 and 5.0	3000 (5000) *For 4kW and 5kW 3000 (4500)	○	○	○	—	○	IP65 (Except cannon plug/ connector pins)	·Middle capacity ·Suitable for the machines directly coupled with ball screw and high stiffness and high repetitive application	·SMT machines ·Inserter ·Food machines
Middle inertia	MDMA 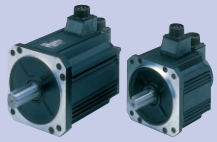	1.0-7.5 7 models 1.0,1.5,2.0, 3.0,4.0,5.0 and 7.5	2000 (3000) *For 7.5kW 1500 (3000)	○	○	○	—	○	IP65 (Except cannon plug/ connector pins)	·Middle capacity ·Suitable for low stiffness machines with belt driven	·Belt driven machines ·Conveyers ·Robots
	MGMA (Low speed/ High torque type)	0.9-6.0 5 models 0.9,2.0, 3.0,4.5 and 6.0	1000 (2000)	○	○	○	—	○	IP65 (Except cannon plug/ connector pins)	·Middle capacity ·Suitable for machines requiring low speed with high torque	·Belt driven machines ·Conveyers ·Robots
	MFMA (Flat type) 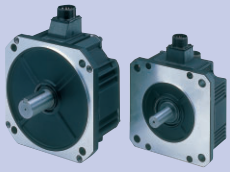	0.4-4.5 4 models 0.4,1.5, 2.5 and 4.5	2000 (3000)	○	○	○	—	○	IP65 (Except cannon plug/ connector pins)	·Middle capacity ·Flat type and suitable for machines with space limitation	·Robots ·Food machines
High inertia	MHMA	0.5-7.5 8 models 0.5,1.0,1.5, 2.0,3.0,4.0, 5.0 and 7.5	2000 (3000) *For 7.5kW 1500 (3000)	○	○	○	—	○	IP65 (Except cannon plug/ connector pins)	·Middle capacity ·Suitable for low stiffness machines with belt driven, and large load moment of inertia	·Belt driven machines ·Conveyors ·Robots

* Motor is sharing with A4/A4P series

Model Designation

• Servo Motor

M S M D 5 A Z S 1 S * *

Special specifications

Symbol	Type
MAMA	Ultra low inertia (100W-750W)
MSMD	Low inertia (50W-750W)
MQMA	Low inertia (100W-400W)
MSMA	Low inertia (1.0kW-5.0W)
MDMA	Middle inertia (1.0kW-7.5kW)
MGMA	Middle inertia (900W-6.0kW)
MFMA	Middle inertia (400W-4.5kW)
MHMA	High inertia (500W-7.5kW)

Motor rated output

Symbol	Rated output	Symbol	Rated output
5A	50W	15	1.5kW
01	100W	20	2.0kW
02	200W	25	2.5kW
04	400W	30	3.0kW
05	500W	40	4.0kW
08	750W	45	4.5kW
09	900W	50	5.0kW
10	1.0kW	60	6.0kW
		75	7.5kW

Voltage specifications

Symbol	Specifications
1	100V
2	200V
Z	100V/200V common(50W only)

Design order
1 : Standard

Rotary encoder specifications

Symbol	Format	Pulse counts	Resolution	Wires
P	Incremental	2500P/r	10000	5
S	Absolute/ Incremental common	17bit	131072	7

Motor structure

MSMD (standard stock), MQMA (build to order)

Symbol	Shaft		Holding brake		Oil seal	
	Round	Key-way, center tap	without	with	without	with*
A	●		●		●	
B	●			●	●	
S		●	●		●	
T		●		●	●	

*Motor with oil seal is manufactured by order.

MSMA , MDMA , MGMA , MFMA , MHMA

Symbol	Shaft		Holding brake		Oil seal	
	Round	Key-way	without	with	without	with
C	●		●			●
D	●			●		●
G		●	●			●
H		●		●		●

Products are standard stock items or build to order items. See index (page F31).

MAMA

Symbol	Shaft		Holding brake		Oil seal	
	Round	Key-way	without	with	without	with
A	●		●		●	
B	●			●	●	
E		●	●		●	
F		●		●	●	

Products are standard stock items or build to order items. See index (page F31).

See page, A4-77 for motor specifications

• Motor with reduction gear

M S M D 0 1 1 P 3 1 N

Symbol	Type
MSMD	Low inertia (100W-750W)

Motor rated output

Symbol	Rated output
01	100W
02	200W
04	400W
08	750W

Voltage specifications

Symbol	Specifications
1	100V
2	200V

Rotary encoder specifications

Symbol	Format	Pulse counts	Resolution	Wires
P	Incremental	2500P/r	10000	5
S	Absolute/ Incremental common	17bit	131072	7

Gear reduction ration, gear type

Symbol	Gear reduction ratio	Motor output (W)				Gear type
		100	200	400	750	
1N	1 / 5	●	●	●	●	For high accuracy
2N	1 / 9	●	●	●	●	
3N	1 / 15	●	●	●	●	
4N	1 / 25	●	●	●	●	

Motor structure

Symbol	Shaft	Holding brake	
	Key-way	without	with
3	●	●	
4	●		●

See page, A4-133 for motor with gear reducer specifications

• Servo Driver

M A D D T 1 2 0 5 F * *

Special specifications

Driver specifications

Symbol	Specifications
F	Feedback scale pulse (A-phase, B-phese) full-closed control.

Frame symbol

Symbol	Frame
MADD	A4 series, Frame A
MBDD	A4 series, Frame B
MCDD	A4 series, Frame C
MDDD	A4 series, Frame D
MEDD	A4 series, Frame E
MFDD	A4 series, Frame F
MGDD	A4 series, Frame G

Power device Max. current rating

Symbol	Power device Max. current rating
T1	1 0A
T2	1 5A
T3	3 0A
T5	5 0A
T7	7 5A
TA	1 0 0A
TB	1 5 0A
TC	3 0 0A

Supply voltage specifications

Symbol	Specifications
1	Single phase, 100V
2	Single phase, 200V
3	3-phase, 200V
5	Single/3-phase,200V

Current detector current rating

Symbol	Current detector, current rating
05	5A
07	7.5A
10	1 0A
20	2 0A
30	3 0A
40	4 0A
64	6 4A
90	9 0A
A2	1 2 0A
B4	2 4 0A

See page, A4-41 for driver specifications

Wiring example

Driver Frame Type Symbol (Frame A, B, C, D)

For details, refer to the Instruction Manual.

● Wiring of main circuit

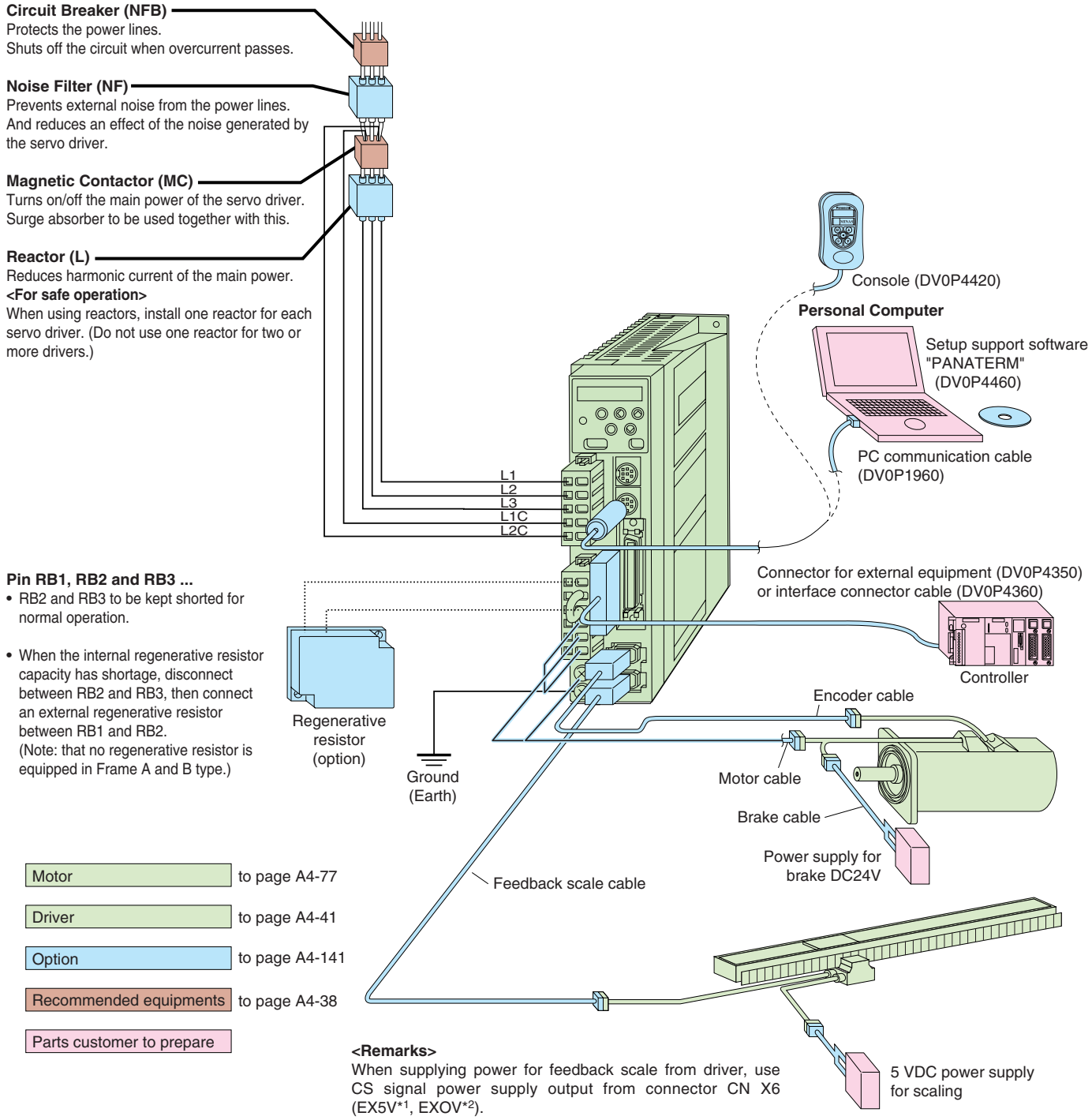

<Remarks>
When supplying power for feedback scale from driver, use CS signal power supply output from connector CN X6 (EX5V*1, EXOV*2).

*1 Current consumption of EX5V is 250 mA max.
*2 EXOV is connected to GND of the control circuit connected to CN X5. For wiring, refer to A4-45 and 46.

Driver Frame Type Symbol (Frame E, F)

For details, refer to the Instruction Manual.

● Wiring of main circuit

Circuit Breaker (NFB)
Protects the power lines.
Shuts off the circuit when overcurrent passes.

Noise Filter (NF)
Prevents external noise from the power lines.
And reduces an effect of the noise generated by the servo driver.

Magnetic Contactor (MC)
Turns on/off the main power of the servo driver.
Surge absorber to be used together with this.

Reactor (L)
Reduces harmonic current of the main power.
<For safe operation>
When using reactors, install one reactor for each servo driver. (Do not use one reactor for two or more drivers.)

P, B1 and B2 ...
- B1 and B2 to be kept shorted for normal operation.
- When the internal regenerative resistor capacity has shortage, disconnect between B1 and B2, then connect an external regenerative resistor between P and B2.

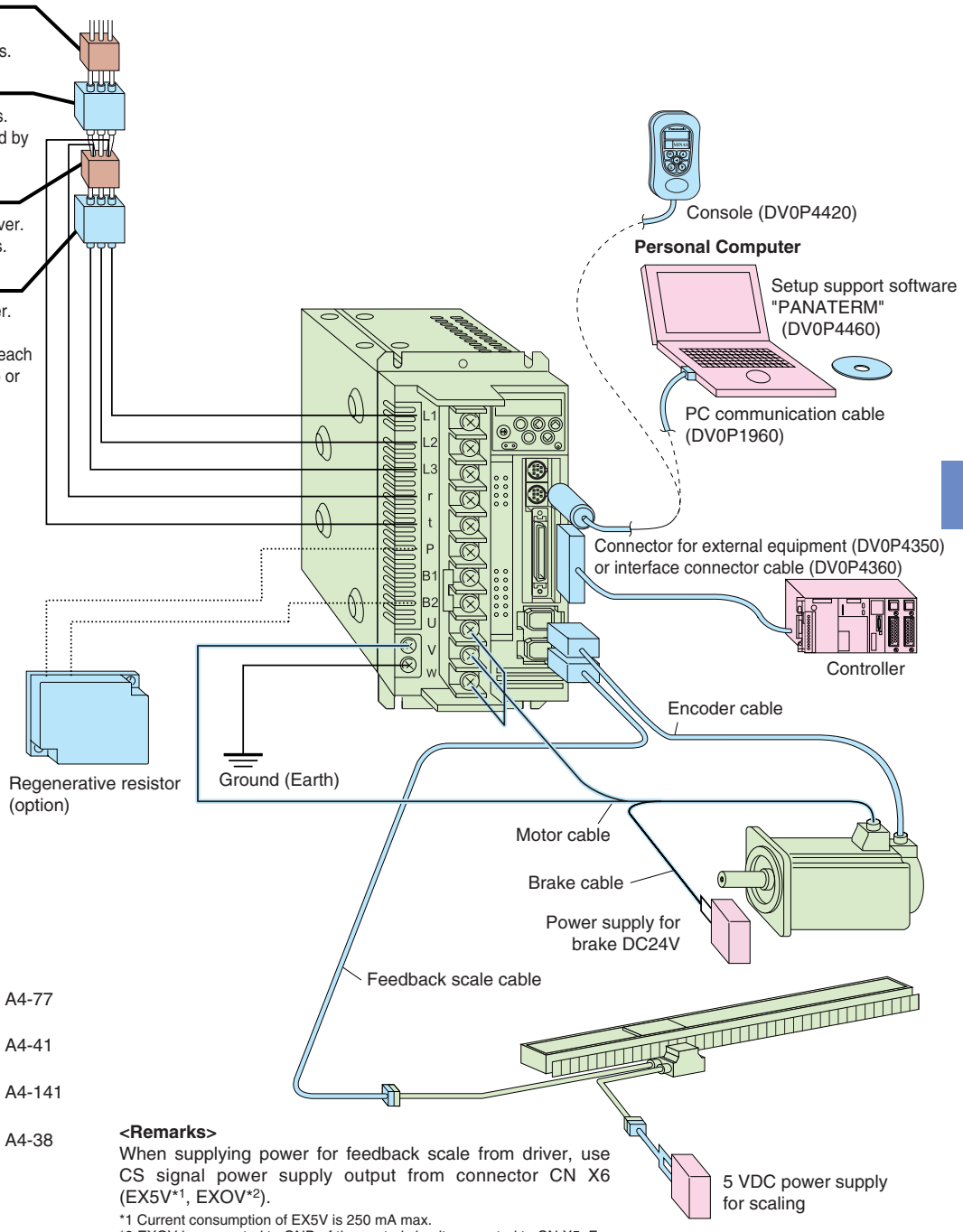

Motor	to page A4-77
Driver	to page A4-41
Option	to page A4-141
Recommended equipments	to page A4-38
Parts customer to prepare	

<Remarks>
When supplying power for feedback scale from driver, use CS signal power supply output from connector CN X6 (EX5V*1, EXOV*2).
*1 Current consumption of EX5V is 250 mA max.
*2 EXOV is connected to GND of the control circuit connected to CN X5. For wiring, refer to A4-45 and 46.

Wiring example

Driver Frame Type Symbol (Frame G)

For details, refer to the Instruction Manual.

● Wiring of main circuit

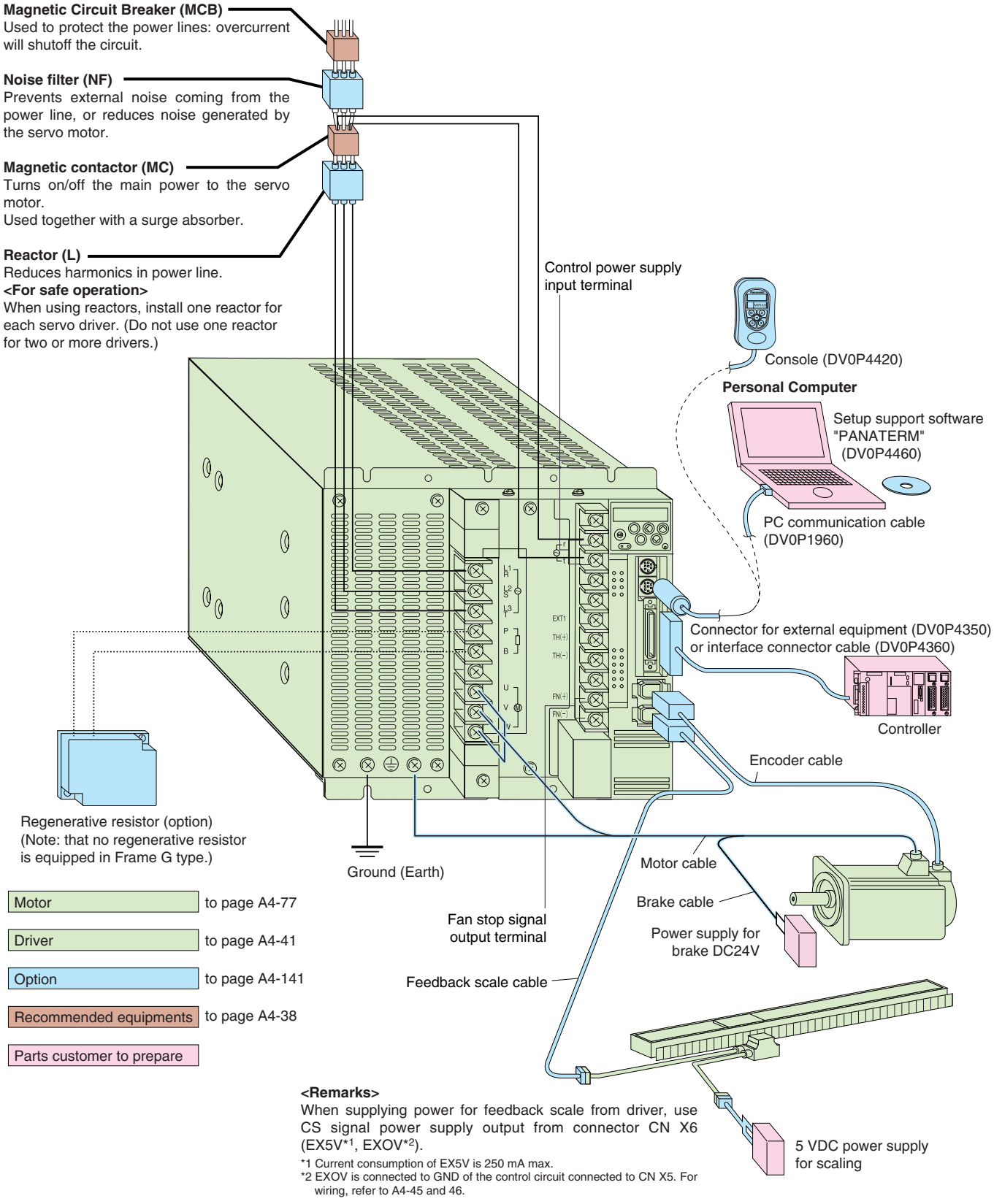

<Remarks>
When supplying power for feedback scale from driver, use CS signal power supply output from connector CN X6 (EX5V*1, EXOV*2).

*1 Current consumption of EX5V is 250 mA max.
*2 EXOV is connected to GND of the control circuit connected to CN X5. For wiring, refer to A4-45 and 46.

• List of recommended peripheral equipments

Power supply voltage	Applicable motor Series	Applicable motor Output	Power capacity (atrated load)	Circuit breaker (rated current)	Noise filter	Surge absorber	Noise filter (signal)	Magnetic contactor (Contact)	Cable diameter (Main circuit)	Cable diameter (controlcircuit)	Connector
Single phase, 100V	MSMD	50W	Approx. 0.4kVA	BBW2102 (10A)	DVOP4170	DVOP4190	DVOP1460	BMFT61041N (3P+1a)	0.75mm² to 2.0mm² AWG14 to 18	0.75mm² AWG18	Connection to exclusive connector
	MSMD MQMA	100W									
		200W	Approx. 0.5kVA								
		400W	Approx. 0.9kVA		DVOP4180			BMFT61541N (3P+1a)			
Single phase, 200V	MSMD	50W	Approx. 0.5kVA		DVOP4170			BMFT61542N (3P+1a)			
		100W									
	MAMA MQMA	100W	Approx. 0.3kVA								
	MAMA MSMD MQMA	200W	Approx. 0.5kVA								
	MSMD MQMA	400W	Approx. 0.9kVA								
Single/ 3-phase, 200V	MAMA MFMA	400W	Approx. 0.9kVA	BBW3152 (15A)	DVOP4180	DVOP1450					
	MHMA	500W	Approx. 1.1kVA								
	MSMD	750W	Approx. 1.3kVA								
	MAMA		Approx. 1.6kVA		DVOP4220			BMFT61842N (3P+1a)	2.0mm² AWG14		
	MDMA MHMA	1.0kW	Approx. 1.8kVA								
	MGMA	900W		BBW3202 (20A)							
	MSMA	1.0kW									
	MSMA MDMA MFMA MHMA	1.5kW	Approx. 2.3kVA								
3-phase, 200V	MSMA MDMA MHMA	2.0kW	Approx. 3.3kVA	BBW3302 (30A)	DVOP4220			BMF6352N (3P+2a2b)			Terminal block M5 11.0 or smaller ø5.3
	MFMA	2.5kW	Approx. 3.8kVA						3.5mm² AWG12		
	MGMA	2.0kW		BBW350S (50A)	DVOP3410						
	MSMA MDMA MHMA MGMA	3.0kW	Approx. 4.5kVA								
	MSMA MDMA MHMA	4.0kW	Approx. 6.0kVA					BMF6652N (3P+2a2b)			
	MFMA	4.5kW	Approx. 6.8kVA								
	MGMA		Approx. 7.5kVA								
	MSMA MDMA MHMA	5.0kW							5.3mm² AWG10		
	MGMA	6.0kW	Approx. 9.0kVA	BBW360S (60A)					L1, L2, L3 5.3mm² AWG10 U, V, W 14mm² AWG6		
	MDMA MHMA	7.5kW	Approx. 11kVA								

- Select a single and 3-phase common specifications corresponding to the power supplies.
- Listed circuit breaker and magnetic contactor are manufactured by Panasonic Electric Works.
  To conform to EC Directives, install a circuit breaker which conforms to IEC and UL Standards (Listed, UL marked) between noise filter and power supply without fail.
- For details of noise filter, refer to Page A4-138.

<Remarks>

- Select a circuit breaker and noise filter which match to the capacity of power supply (including a load condition).
- Terminal block and earth terminals
  - Use a copper conductor cables with temperature rating of 60˚C or higher.
  - Earth terminals for Frame A to D are M4 and M5 for Frame E to G.
  - Larger tightening toque for screws than the Max.value (M4 : 1.2 N·m, M5 : 2.0 N·m) may damage the terminal block.
  - Mounting screws on the cover of terminal block for frames E to G and screw on acrylic cover of terminal block for frame G should be tightened with 0.2 N·m torque.
    Application of torque larger than 0.2 N·m may damage the thread on the driver.
- Use an earth cable with the same diameter as that of the main circuit cable.
  If the diameter of the main circuit cable is 1.6mm² or less, use an earth cable with a diameter of 1.6mm² (AWG14).
- Use the attached exclusive connector for A to D-frame, and maintain the peeled off length of 8 tot 9mm.
- Tighten the screws of the connector, CN X5 for the host controller with the torque of 0.2±0.05 N·m.
- Larger torque than 0.25N·m may damage the connector at the driver side.

<Caution>

Do not turn on power without first positively tightening all terminal block screws, otherwise, loose contacts may generate heat (smoking, firing).

Table of Part Numbers and Options

Motor series	Power supply	Rated rotational speed (r/min)	Output (W)	2500P/r, Incremental: Motor Note) 1	Rating/ Spec. (page)	Encoder cable Note) 2	17bit, Absolute/Incremental common: Motor Note) 1	Rating/ Spec. (page)	Encoder cable Note) 2	Encoder cable Note) 2	2500P/r and 17bit common: Driver	Frame symbol		Optional parts: Motor cable Note) 2	Motor cable (with brake) Note) 2	Brake cable Note) 2	Regenerative resistor	Reactor	Noise filter
MAMA [Ultra low inertia]	Single phase 200V	5000	100	MAMA012P1□	A4-77	MFECA 0**0EAM	MAMA012S1□	A4-77	MFECA 0**0EAE	MFECA 0**0EAD	MADDT1207F	A-frame		MFMCA 0**0EED	—	MFMCB 0**0GET	DV0P4283	DV0P220	DV0P4170
			200	MAMA022P1□			MAMA022S1□				MBDDT2210F	B-frame							
			400	MAMA042P1□			MAMA042S1□				MCDDT3520F	C-frame						DV0P221	DV0P4180
			750	MAMA082P1□			MAMA082S1□				MDDDT5540F	D-frame					DV0P4284		DV0P4220
	3-phase, 200V	5000	400	MAMA042P1□			MAMA042S1□				MCDDT3520F	C-frame					DV0P4283	DV0P220	DV0P4180
			750	MAMA082P1□			MAMA082S1□				MDDDT5540F	D-frame					DV0P4284	DV0P221	DV0P4220
MSMD [low inertia]	Single phase 100V	3000	50	MSMD5AZP1□	A4-79	MFECA 0**0EAM	MSMD5AZS1□	A4-79	MFECA 0**0EAE	MFECA 0**0EAD	MADDT1105F	A-frame		MFMCA 0**0EED	—	MFMCB 0**0GET	DV0P4280	DV0P227	DV0P4170
			100	MSMD011P1□			MSMD011S1□				MADDT1107F								
			200	MSMD021P1□	A4-81		MSMD021S1□	A4-81			MBDDT2110F	B-frame					DV0P4283	DV0P228	
			400	MSMD041P1□			MSMD041S1□				MCDDT3120F	C-frame					DV0P4282		DV0P4180
	Single phase 200V	3000	50	MSMD5AZP1□	A4-83		MSMD5AZS1□	A4-83			MADDT1205F	A-frame					DV0P4281	DV0P220	DV0P4170
			100	MSMD012P1□			MSMD012S1□				MADDT1205F								
			200	MSMD022P1□	A4-85		MSMD022S1□	A4-85			MADDT1207F						DV0P4283		
			400	MSMD042P1□			MSMD042S1□				MBDDT2210F	B-frame							
			750	MSMD082P1□			MSMD082S1□				MCDDT3520F	C-frame						DV0P221	DV0P4180
	3-phase, 200V	3000	750	MSMD082P1□			MSMD082S1□				MCDDT3520F								
MQMA [Low inertia Cube type]	Single phase 100V	3000	100	MQMA011P1□	A4-87	MFECA 0**0EAM	MQMA011S1□	A4-87	MFECA 0**0EAE	MFECA 0**0EAD	MADDT1107F	A-frame		MFMCA 0**0EED	—	MFMCB 0**0GET	DV0P4280	DV0P227	DV0P4170
			200	MQMA021P1□			MQMA021S1□				MBDDT2110F	B-frame					DV0P4283	DV0P228	
			400	MQMA041P1□			MQMA041S1□				MCDDT3120F	C-frame					DV0P4282		DV0P4180
	Single phase 200V	3000	100	MQMA012P1□	A4-89		MQMA012S1□	A4-89			MADDT1205F	A-frame					DV0P4281	DV0P220	DV0P4170
			200	MQMA022P1□			MQMA022S1□				MADDT1207F						DV0P4283		
			400	MQMA042P1□			MQMA042S1□				MBDDT2210F	B-frame						DV0P221	
MSMA [low inertia]	Single phase 200V	3000	1000	MSMA102P1□	A4-91	MFECA 0**0ESD	MSMA102S1□	A4-91	MFECA 0**0ESE	MFECA 0**0ESD	MDDDT5540F	D-frame		MFMCD 0**2ECD	MFMCA 0**2FCD	—	DV0P4284	DV0P222	DV0P4220
			1500	MSMA152P1□			MSMA152S1□				MDDDT5540F								
	3-phase, 200V	3000	1000	MSMA102P1□			MSMA102S1□				MDDDT5540F								
			1500	MSMA152P1□			MSMA152S1□				MDDDT5540F								
			2000	MSMA202P1□			MSMA202S1□				MEDDT7364F	E-frame		MFMCD0**2ECT	MFMCA0**2FCT		DV0P4285	DV0P223	
			3000	MSMA302P1□	A4-93		MSMA302S1□	A4-93			MFDDTA390F	F-frame		MFMCA 0**3ECT	MFMCA 0**3FCT		DV0P4285 x 2 in parallel	DV0P224	DV0P3410
			4000	MSMA402P1□			MSMA402S1□				MFDDTB3A2F							DV0P225	
			5000	MSMA502P1□			MSMA502S1□				MFDDTB3A2F							—	
MDMA [Middle inertia]	Single phase 200V	2000	1000	MDMA102P1□	A4-95	MFECA 0**0ESD	MDMA102S1□	A4-95	MFECA 0**0ESE	MFECA 0**0ESD	MDDDT3530F	D-frame		MFMCD 0**2ECD	MFMCA 0**2FCD	—	DV0P4284	DV0P222	DV0P4220
			1500	MDMA152P1□			MDMA152S1□				MDDDT5540F								
	3-phase, 200V	2000 Note)3	1000	MDMA102P1□			MDMA102S1□				MDDDT3530F								
			1500	MDMA152P1□			MDMA152S1□				MDDDT5540F								
			2000	MDMA202P1□	A4-97		MDMA202S1□	A4-97			MEDDT7364F	E-frame		MFMCD0**2ECT	MFMCA0**2FCT		DV0P4285	DV0P223	
			3000	MDMA302P1□			MDMA302S1□				MFDDTA390F	F-frame		MFMCA 0**3ECT	MFMCA 0**3FCT		DV0P4285 x 2 in parallel	DV0P224	DV0P3410
			4000	MDMA402P1□	A4-99		MDMA402S1□	A4-99			MFDDTB3A2F							DV0P225	
			5000	MDMA502P1□			MDMA502S1□				MFDDTB3A2F							—	
			7500	MDMA752P1□			MDMA752S1□				MGDDTC3B4F	G-frame		—	—		DV0P4285 x 4 in parallel	—	
MGMA [Middle inertia Low speed/ High torque]	Single phase 200V	1000	900	MGMA092P1□	A4-101	MFECA 0**0ESD	MGMA092S1□	A4-101	MFECA 0**0ESE	MFECA 0**0ESD	MDDDT5540F	D-frame		MFMCD 0**2ECD	MFMCA 0**2FCD	—	DV0P4284	DV0P222	DV0P4220
	3-phase, 200V		900	MGMA092P1□			MGMA092S1□				MDDDT5540F								
			2000	MGMA202P1□			MGMA202S1□				MFDDTA390F	F-frame		MFMCA 0**3ECT	MFMCA 0**3FCT		DV0P4285 x 2 in parallel	DV0P223	DV0P3410
			3000	MGMA302P1□			MGMA302S1□				MFDDTB3A2F							DV0P224	
			4500	MGMA452P1□	A4-103		MGMA452S1□	A4-103			MFDDTB3A2F							—	
			6000	MGMA602P1□			MGMA602S1□				MGDDTC3B4F	G-frame		—	—		DV0P4285 x 4 in parallel	—	
MFMA [Middle inertia Flat type]	Single phase 200V	2000	400	MFMA042P1□	A4-105	MFECA 0**0ESD	MFMA042S1□	A4-105	MFECA 0**0ESE	MFECA 0**0ESD	MCDDT3520F	C-frame		MFMCA 0**2ECD	MFMCA 0**2FCD	—	DV0P4283	DV0P220	DV0P4180
			1500	MFMA152P1□			MFMA152S1□				MDDDT5540F	D-frame					DV0P4284	DV0P222	DV0P4220
	3-phase, 200V	2000 Note)3	400	MFMA042P1□			MFMA042S1□				MCDDT3520F	C-frame					DV0P4283	DV0P220	DV0P4180
			1500	MFMA152P1□			MFMA152S1□				MDDDT5540F	D-frame					DV0P4284	DV0P222	DV0P4220
			2500	MFMA252P1□	A4-107		MFMA252S1□	A4-107			MEDDT7364F	E-frame		MFMCD 0**3ECT	MFMCA 0**3FCT		DV0P4285	DV0P224	
			4500	MFMA452P1□			MFMA452S1□				MFDDTB3A2F	F-frame					DV0P4285 x 2 in parallel	—	DV0P3410
MHMA [High inertia]	Single phase 200V	2000	500	MHMA052P1□	A4-109	MFECA 0**0ESD	MHMA052S1□	A4-109	MFECA 0**0ESE	MFECA 0**0ESD	MCDDT3520F	C-frame				—	DV0P4283	DV0P220	DV0P4180
			1000	MHMA102P1□			MHMA102S1□				MDDDT3530F	D-frame		MFMCD 0**2ECD	MFMCA 0**2FCD		DV0P4284	DV0P222	DV0P4220
			1500	MHMA152P1□			MHMA152S1□				MDDDT5540F								
	3-phase, 200V	2000 Note)3	500	MHMA052P1□			MHMA052S1□				MCDDT3520F	C-frame					DV0P4283	DV0P220	DV0P4180
			1000	MHMA102P1□			MHMA102S1□				MDDDT3530F	D-frame					DV0P4284	DV0P222	DV0P4220
			1500	MHMA152P1□			MHMA152S1□				MDDDT5540F								
			2000	MHMA202P1□			MHMA202S1□				MEDDT7364F	E-frame					DV0P4285	DV0P223	
			3000	MHMA302P1□	A4-111		MHMA302S1□	A4-111			MFDDTA390F	F-frame		MFMCA 0**3ECT	MFMCA 0**3FCT		DV0P4285 x 2 in parallel	DV0P224	DV0P3410
			4000	MHMA402P1□			MHMA402S1□				MFDDTB3A2F							DV0P225	
			5000	MHMA502P1□			MHMA502S1□				MFDDTB3A2F							—	
			7500	MHMA752P1□	A4-113		MHMA752S1□	A4-113			MGDDTC3B4F	G-frame		—	—		DV0P4285 x 4 in parallel		

• Carrying page

Options		Part No.	Carrying page
Technical reference	Japanese	DV0PM20008	—
	English	DV0PM20009	—
Console		DV0P4420	A4-152
Setup support software, PANATERM	Japanese / English	DV0P4460	A4-151
RS232 communication cable (for connection with PC)		DV0P1960	A4-147
RS485 communication cable (for connection with PC)	L=200mm	DV0P1970	A4-147
	L=500mm	DV0P1971	
	L=1000mm	DV0P1972	
Interface cable		DV0P4360	A4-147
Connector kit for external equipment		DV0P4350	A4-146
Connector kit for power supply input	For A frame, B frame	DV0PM20093	
	For C frame, D frame	DV0PM20032	
Connector kit for motor connection (driver side)	For A frame to D frame	DV0PM20034	
Connector kit for motor and encoder		DV0P4290	A4-148
		DV0P4380	
		DV0P4310	A4-149
		DV0P4320	
		DV0P4330	
		DV0P4340	A4-150
		DV0PM20005	
		DV0PM20006	
Connector kit for absolute encoder		DV0PM20010	A4-150
Battery for absolute encoder		DV0P2990	A4-154
Mounting bracket	Frame A	DV0P4271	A4-151
	Frame B	DV0P4272	
	Frame C	DV0P4273	
	Frame D	DV0P4274	
Encoder cable	MFECA0**0EAD		A4-143
	MFECA0**0EAE		
	MFECA0**0EAM		
	MFECA0**0ESD		
	MFECA0**0ESE		
Motor cable	MFMCA0**0EED		A4-144
	MFMCA0**2ECD		
	MFMCA0**3ECT		
	MFMCD0**2ECD		
	MFMCD0**2ECT		
	MFMCD0**3ECT		
Motor cable (with brake)	MFMCA0**2FCD		A4-145
	MFMCA0**2FCT		
	MFMCA0**3FCT		
Brake cable	MFMCB0**0GET		A4-145
Regenerative resistor	50 Ω , 25W	DV0P4280	A4-153
	100 Ω , 25W	DV0P4281	
	25 Ω , 50W	DV0P4282	
	50 Ω , 50W	DV0P4283	
	30 Ω , 100W	DV0P4284	
	20 Ω , 130W	DV0P4285	
Reactor		DV0P220 to DV0P228	A4-152
Noise filter		DV0P4170	A4-138
		DV0P4180	
		DV0P4220	
		DV0P3410	
Surge absorber	Single phase 100V, 200V	DV0P4190	A4-139
	3-phase 200V	DV0P1450	
Noise filter for signal wire		DV0P1460	A4-139

Note) 1. □represents the motor structure.
Note) 2. ** represents the cable length (specified value)
For details, refer to cable specifications (A4-141).
Note) 3. 7.5kW output type:1500(r/min)

Common Specifications of Driver

Basic Specifications	Input power	100V	Main circuit	Single phase, 100-115V +10% −15% 50/60Hz
			Control circuit	Single phase, 100-115V +10% −15% 50/60Hz
		200V	Main circuit: Frame A, B	Single phase, 200-240V +10% −15% 50/60Hz
			Main circuit: Frame C, D	Single/3-phase, 200-240V +10% −15% 50/60Hz
			Main circuit: Frame E to G	3-phase, 200-230V +10% −15% 50/60Hz
			Control circuit: Frame A to D	Single phase, 200-240V +10% −15% 50/60Hz
			Control circuit: Frame E to G	Single phase, 200-230V +10% −15% 50/60Hz
	Environment		Temperature	Operating : 0 to 55˚C, Storage : −20 to +65˚C (Max.temperature guarantee 80˚C for 72 hours <Nomal temperature>)
			Humidity	Both operating and storage : 90%RH or less (free from condensation)
			Altitude	1000m or lower
			Vibration	5.88m/s² or less, 10 to 60Hz (No continuous use at resonance frequency)
	Withstand voltage			Should be 1500VAC (Sensed current: 20mA) or higher for 1 minute between Primary and Ground.
	Control method			IGBT PWM Sinusoidal wave drive
	Encoder feedback			17-bit (131072 resolution) absolute/incremental encoder, 2500P/r (10000 resolution) incremental encoder
	Feedback scale			Feedback scale pulse (A-phase, B-phase) in line driver output.
	Control signal		Input	10 inputs (1) Servo-ON, (2) Control mode switching, (3) Gain switching/Torque limit switching, (4) Alarm clear Other inputs vary depending on the control mode.
			Output	6 outputs (1) Servo alarm, (2) Servo ready, (3) Release signal of external brake (4) Zero speed detection, (5) Torque in-limit. Other outputs vary depending on the control mode.
	Analog signal		Input	3 inputs (16Bit A/D : 1 input, 10Bit A/D : 2 inputs)
			Output	2 outputs (for monitoring) (1) Speed monitor (Monitoring of actual motor speed or command speed is enabled. Select the content and scale with parameter.), (2) Torque monitor (Monitoring of torque command, [approx.. 3V/rated torque]), deviation counter or full-closed deviation is enabled. Select the content or scale with parameter.)
	Pulse signal		Input	1 inputs Tthe exclusive input for line driver (MAX. 4Mpps).
			Output	4 outputs Feed out the encoder pulse (A, B and Z-phase) or feedback scale pulse (EXA, EXB) in line driver. Z-phase and EXZ-phase pulse is also fed out in open collector.
	Communication function		RS232	1 : 1 communication to a host with RS232 interface is enabled.
			RS485	1 : n communication up to 15 axes to a host with RS485 interface is enabled.
	Front panel			(1) 5 keys (MODE, SET, UP, DOWN, SHIFT), (2) LED (6-digit)
	Regeneration			Frame A, B, G : no built-in regenerative resistor (external resistor only) Frame C to F : Built-in regenerative resistor (external resistor is also enabled.)
	Dynamic brake			Setup of action sequence at Power-OFF, Servo-OFF, at protective function activation and over-travel inhibit input is enabled. * For G is no function.
	Control mode			Feedback scale pulse (A-phase, B-phase) full-closed control.

Functions	Full-closed control	Control input	(1) CW driver inhibition (2) CCW driver inhibition (3) Deviation counter clear (4) Command pulse input inhibition (5) Electronic gear switching (6) Damping control switching
		Control output	(1) Full-closed positioning complete (in-position)
		Pulse input: Max. command pulse frequency	Exclusive interface for line driver : (4Mpps)
		Pulse input: Input pulse signal format	Differential input. Selectable with parameter ((1) CCW/CW (2) A and B-phase (3) Command and direction)
		Pulse input: Electronic gear (Division/Multiplication of command pulse)	Process the command pulse frequency x $\frac{(1 \text{ to } 10000) \times 2^{(0\text{-}17)}}{1 \text{ to } 10000}$ as a position command input
		Pulse input: Smoothing filter	Primary delay filter is adaptable to the command input.
		Analog input: Torque limit command input	Individual torque limit for both CW and CCW direction is enabled. (3V/rated torque)
		Setup range of division / multiplication of feedback scale	Setting of ratio between encoder pulse (denominator) and feedback scale pulse (numerator) is enabled within a range of (1 to 10000) x $2^{(0\text{-}17)}$ / (1 to 10000).
	Common	Auto-gain tuning: Real-time	Corresponds to load inertia fluctuation, possible to automatically set up parameters related to notch filter.
		Auto-gain tuning: Normal mode	Estimates load inertia and sets up an appropriate servo gain.
		Auto-gain tuning: Fit-gain function	Automatically searches and sets up the value which makes the fastest settling time with external command input.
		Masking of unnecessary input	Masking of the following input signal is enabled. (1) Over-travel inhibition (2) Torque limit (3) Command pulse inhibition (4) Speed-zero clamp
		Division of encoder feedback pulse	Set up of any value is enabled (encoder pulses count is the max.).
		Protective function: Soft error	Over-voltage, under-voltage, over-speed, over-load, over-heat, over-current and encoder error etc.
		Protective function: Hard error	Excess position deviation, command pulse division error, and EEPROM error etc.
		Traceability of alarm data	Traceable up to past 14 alarms including the present one.
		Damping control function	Manual setup with parameter
		Setup: Manual	5push switches on front panel [MODE] [SET] [△] [▽] [◁]
		Setup: Setup support software	PANATERM (Supporting OS : Windows98, Windows ME, Windows2000, and WindowsXP)

Standard Wiring Example of Main Circuit

● Frame A, B

• In Case of Single Phase, 100V

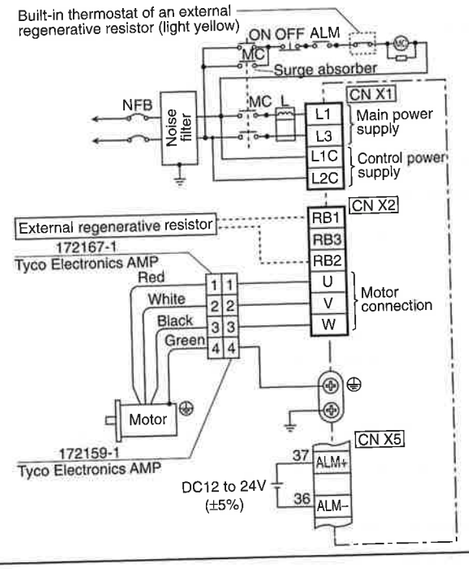

• In Case of Single Phase, 200V

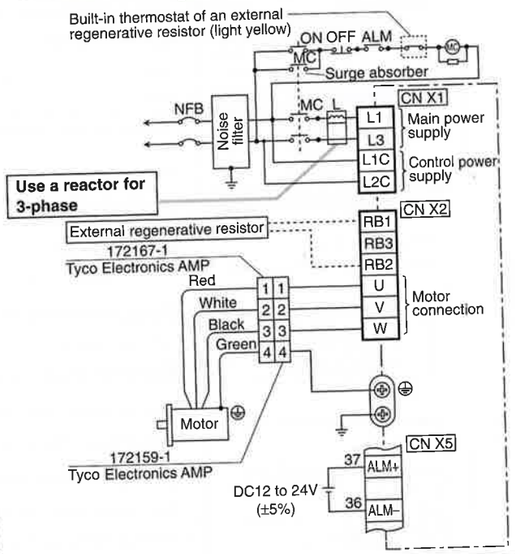

● Frame C, D

• In Case of Single Phase, 200V

<Remarks>
When you use single phase, connect the main power between L1 and L3 terminals.

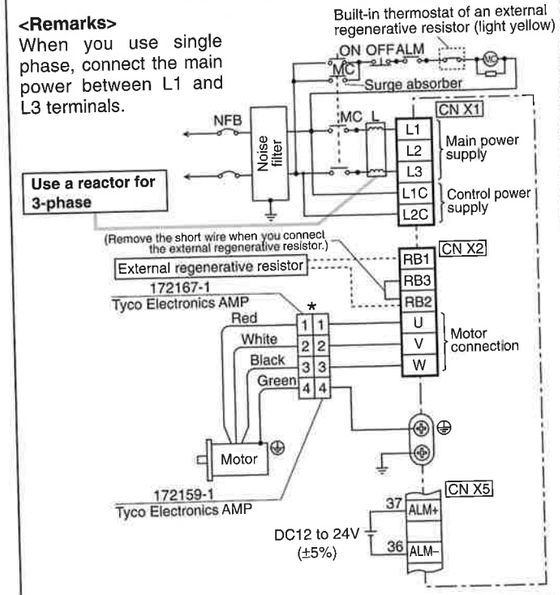

• In Case of 3-Phase, 200V

<Remarks>
When you use single phase, connect the main power between L1 and L3 terminals.

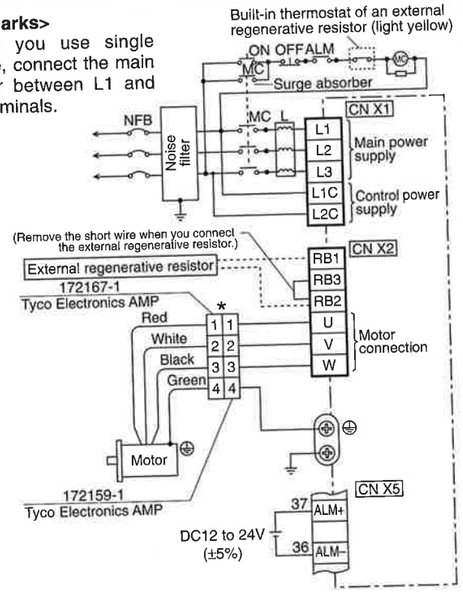

* When you use motor model of MSMA, MDMA, MFMA, MHMA and MGMA, use the connections as the right table shows..

[Motor portion]
Connector :
by Japan Aviation Electronics Ind.

<Remark>
Do not connect anything to NC.

JL04V-2E20-4PE-B-R
JL04HV-2E22-22PE-B-R

PIN No.	Application
A	U-phase
B	V-phase
C	W-phase
D	Ground

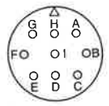

JL04V-2E20-18PE-B-R

PIN No.	Application
G	Brake
H	Brake
A	NC
F	U-phase
I	V-phase
B	W-phase
E	Ground
D	Ground
C	NC

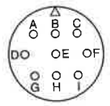

JL04V-2E24-11PE-B-R

PIN No.	Application
A	Brake
B	Brake
C	NC
D	U-phase
E	V-phase
F	W-phase
G	Ground
H	Ground
I	NC

● Frame E, F

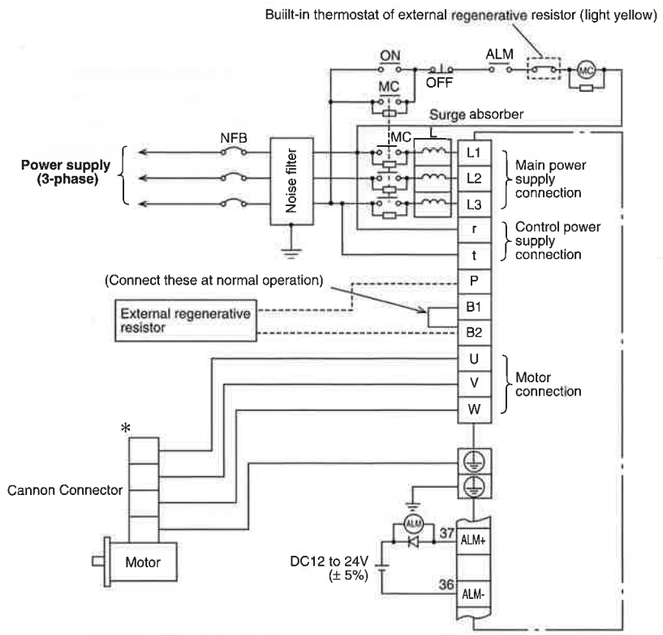

* One of the connections shown right applies according to series of the motor. Refer to "Connector and Plug Specifications" on page A4-142.

[Motor portion]

JL04V-2E20-4PE-B-R
JL04HV-2E22-22PE-B-R

PIN No.	Application
A	U-phase
B	V-phase
C	W-phase
D	Ground

JL04V-2E20-18PE-B-R

PIN No.	Application
G	Brake
H	Brake
A	NC
F	U-phase
I	V-phase
B	W-phase
E	Ground
D	Ground
C	NC

JL04V-2E24-11PE-B-R

PIN No.	Application
A	Brake
B	Brake
C	NC
D	U-phase
E	V-phase
F	W-phase
G	Ground
H	Ground
I	NC

<Remark> Do not connect anything to NC.

● Frame G

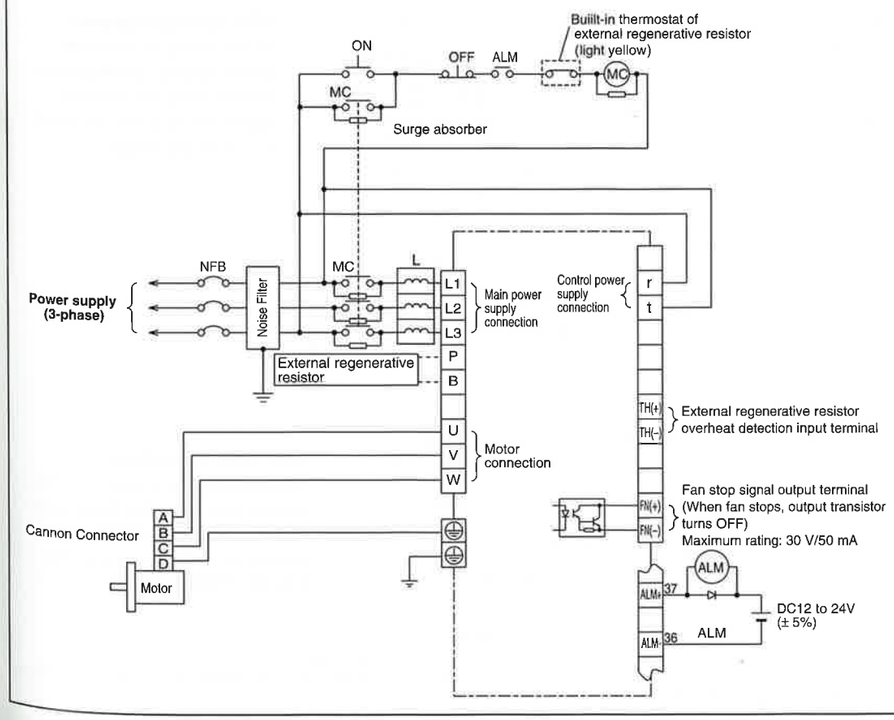

[Motor portion]

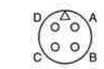

JL04V-2E32-17PE-B-R

PIN No.	Application
A	U-phase
B	V-phase
C	W-phase
D	Ground

[with brake]

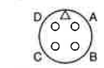

N/MS3102A14S-2P

PIN No.	Application
A	Brake
B	Brake
C	NC
D	NC

<Remark>
Do not connect anything to NC.

Encoder/ External Scale Wiring Diagram

● 2500P/r Incremental encoder

Motor MAMA, MSMD and MQMA series

<For safe operation>
The maximum length of cable connecting the driver to the scale should be 20 m. If a longer cable is necessary, consult your supplier.

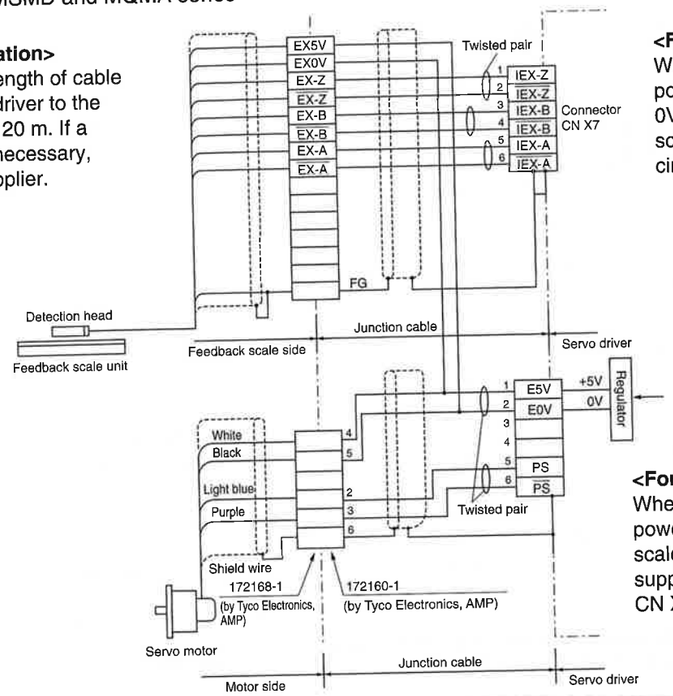

<For safe operation>
When using an external power supply, connect the 0V line from the feedback scale and encoder to GND circuit of the driver.

<For safe operation>
When using the driver internal power supply for the feedback scale, use CS signal power supply output from connector CN X6 (EX5V*1, EXOV*2).

Motor MSMA, MDMA MFMA, MHMA and MGMA series

<For safe operation>
The maximum length of cable connecting the driver to the scale should be 20 m. If a longer cable is necessary, consult your supplier.

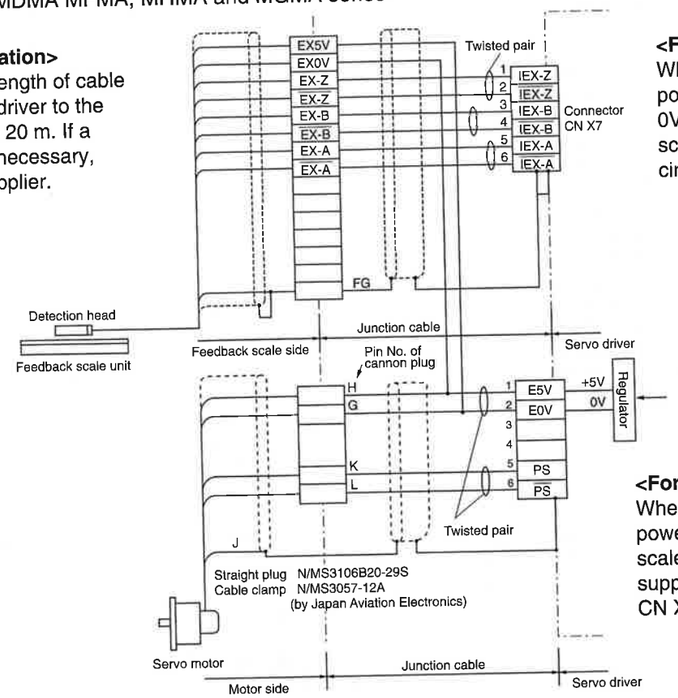

<For safe operation>
When using an external power supply, connect the 0V line from the feedback scale and encoder to GND circuit of the driver.

<For safe operation>
When using the driver internal power supply for the feedback scale, use CS signal power supply output from connector CN X6 (EX5V*1, EXOV*2).

*1 Current consumption of EX5V is 250 mA max.
*2 EXOV is connected to GND of the control circuit connected to CN X5. For wiring, refer to the figure.

● 17bit Absolute/ Incremental common encoder

Motor MAMA, MSMD and MQMA series

<For safe operation>
The maximum length of cable connecting the driver to the scale should be 20 m. If a longer cable is necessary, consult your supplier.

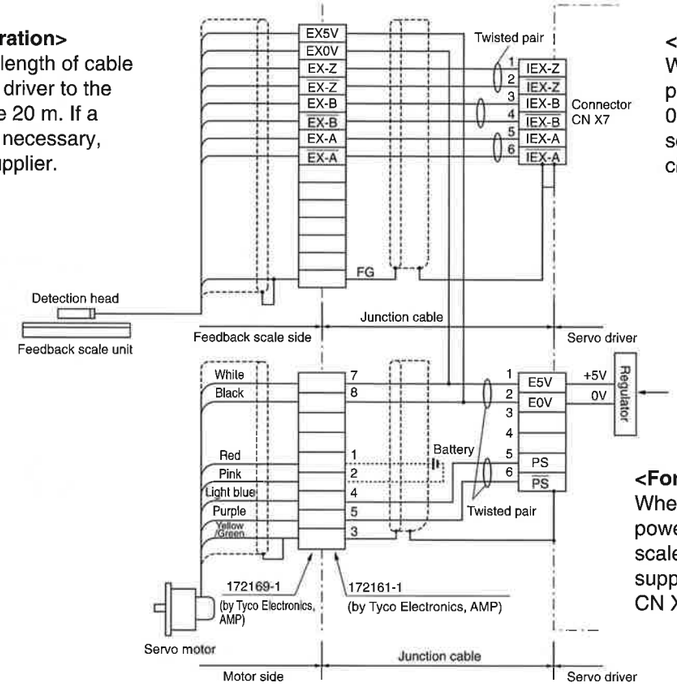

<For safe operation>
When using an external power supply, connect the 0V line from the feedback scale and encoder to GND circuit of the driver.

<For safe operation>
When using the driver internal power supply for the feedback scale, use CS signal power supply output from connector CN X6 (EX5V*1, EXOV*2).

Motor MSMA, MDMA MFMA, MHMA and MGMA series

<For safe operation>
The maximum length of cable connecting the driver to the scale should be 20 m. If a longer cable is necessary, consult your supplier.

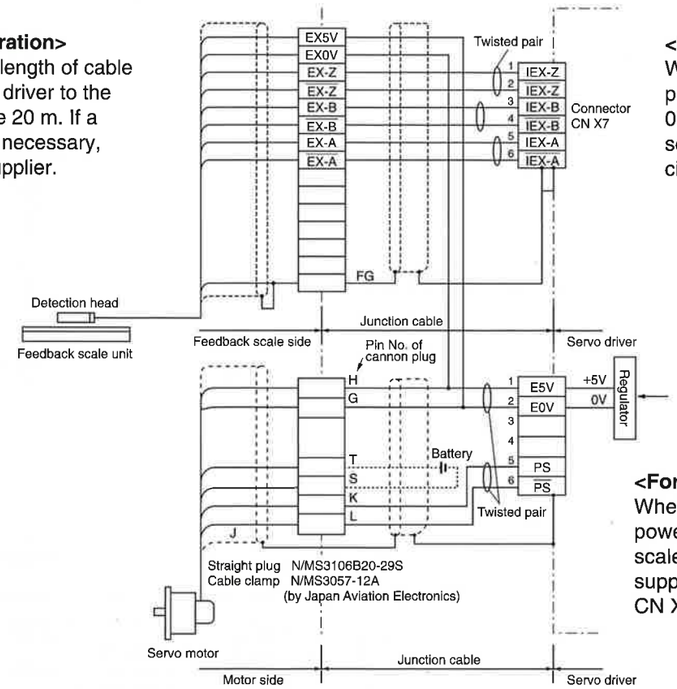

<For safe operation>
When using an external power supply, connect the 0V line from the feedback scale and encoder to GND circuit of the driver.

<For safe operation>
When using the driver internal power supply for the feedback scale, use CS signal power supply output from connector CN X6 (EX5V*1, EXOV*2).

Standard Wiring Example of Control Circuit

● Wiring examples at each control mode

● CN X5 Wiring example at full-close control mode

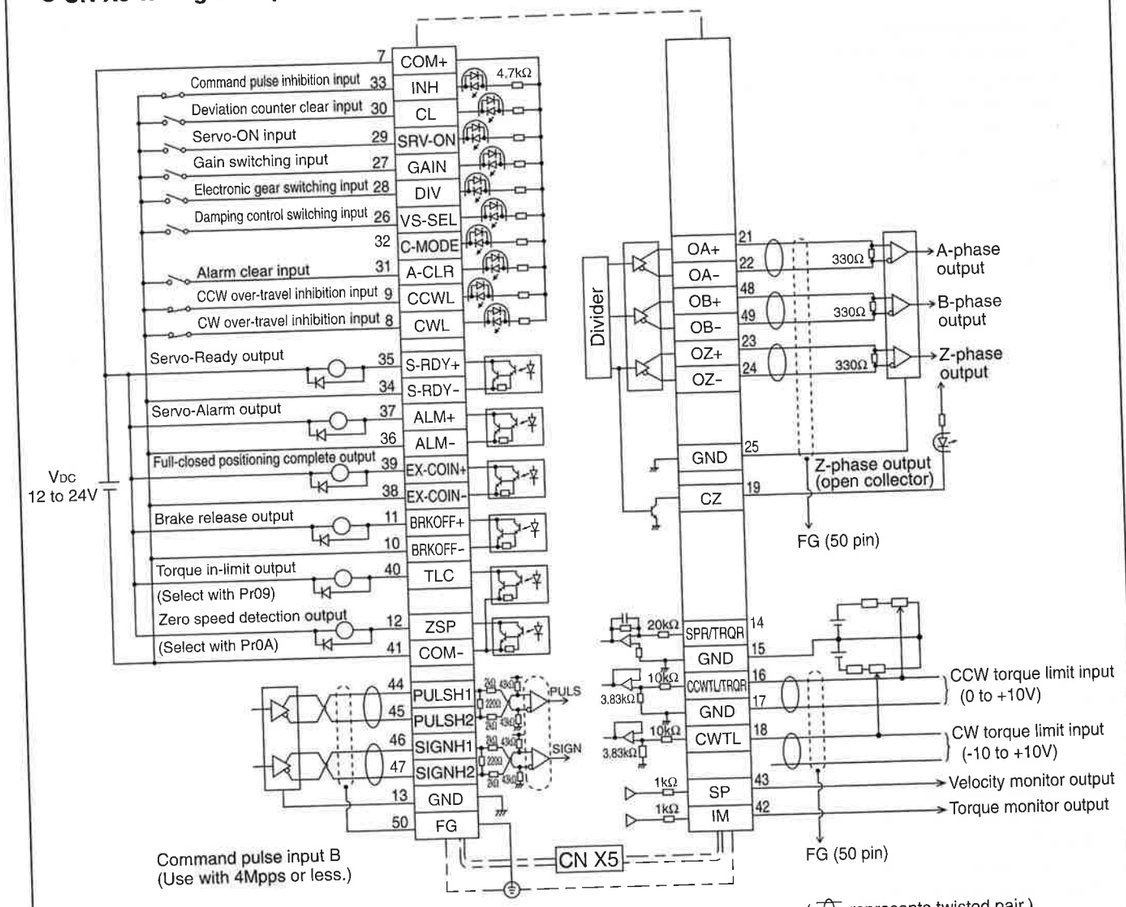

* Processing method of shield wire depends on the design of the control circuit.

Table of Applicable Motors

Driver		Motor series							
Frame symbol	Part No.	MAMA	MSMD	MQMA	MSMA	MDMA	MGMA	MFMA	MHMA
A-frame	MADDT1105F		MSMD5AZ***						
	MADDT1107F		MSMD011***	MQMA011***					
	MADDT1205F		MSMD5AZ*** MSMD012***	MQMA012***					
	MADDT1207F	MAMA012***	MSMD022***	MQMA022***					
B-frame	MBDDT2110F		MSMD021***	MQMA021***					
	MBDDT2210F	MAMA022***	MSMD042***	MQMA042***					
C-frame	MCDDT3120F		MSMD041***	MQMA041***				MFMA042***	MHMA052***
	MCDDT3520F	MAMA042***	MSMD082***						MHMA102***
D-frame	MDDDT3530F					MDMA102***			MHMA152***
	MDDDT5540F	MAMA082***			MSMA102*** MSMA152***	MDMA152***	MGMA092***	MFMA152***	
E-frame	MEDDT7364F				MSMA202***	MDMA202***		MFMA252***	MHMA202***
F-frame	MFDDTA390F				MSMA302***	MDMA302***	MGMA202***		MHMA302***
	MFDDTB3A2F				MSMA402*** MSMA502***	MDMA402*** MDMA502***	MGMA302*** MGMA452***	MFMA452***	MHMA402*** MHMA502***
G-frame	MGDDTC3B4F					MDMA752***	MGMA602***		MHMA752***

Refer to page, A4-39, Table of Part Numbers and Options as well.

Driver/Dimensions

Frame A

[unit: mm]

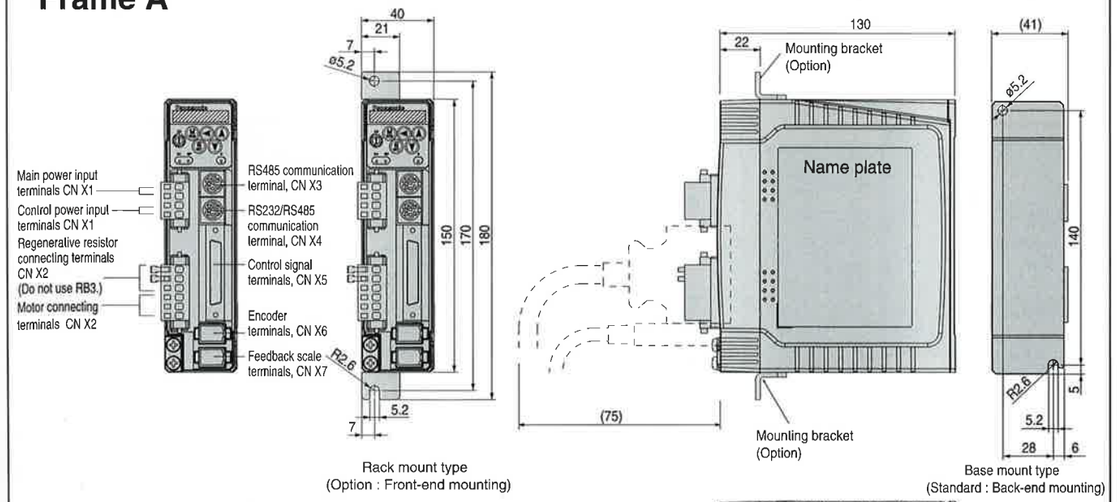

Connector at driver side

Connector sign	Connector type	Manufacturer
CNX7	53460-0629 (or equivalent)	Molex Inc.
CNX6	53460-0629 (or equivalent)	Molex Inc.
CNX5	529865079 (or equivalent)	Molex Inc.
CNX4	MD-S8000-10 (or equivalent)	J.S.T. Mfg.Co., Ltd.
CNX3	MD-S8000-10 (or equivalent)	J.S.T. Mfg.Co., Ltd.
CNX2	S06B-F32SK-GGXR (or equivalent)	J.S.T. Mfg.Co., Ltd.
CNX1	S04B-F32SK-GGXR (or equivalent)	J.S.T. Mfg.Co., Ltd.

Connector at Power Supply and Motor side

Connector sign	Connector type	Manufacturer
CNX2	06JFAT-SAXGF (or equivalent)	J.S.T. Mfg.Co., Ltd.
CNX1	04JFAT-SAXGF (or equivalent)	J.S.T. Mfg.Co., Ltd.

Mass 0.8kg

Frame B

[unit: mm]

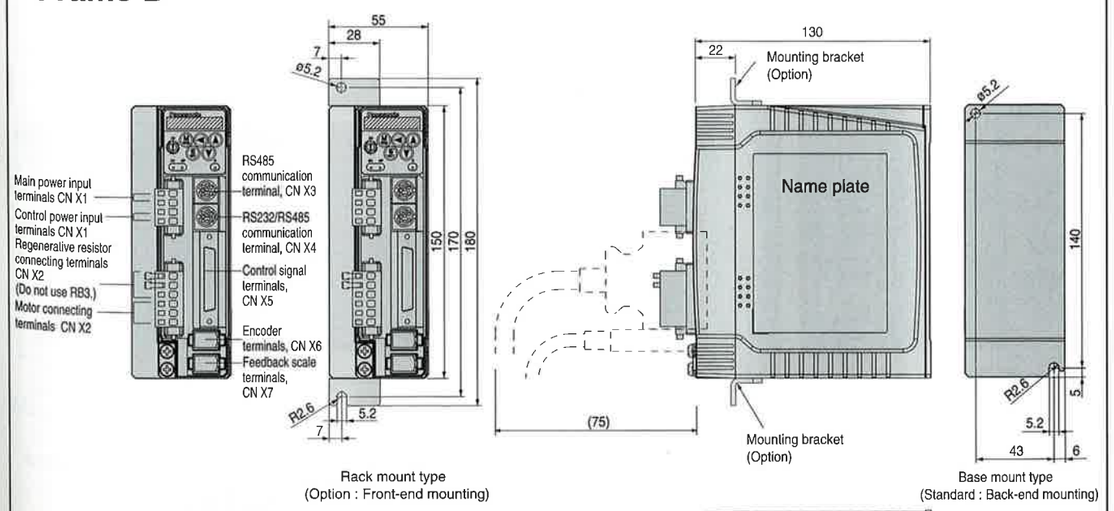

Connector at driver side

Connector sign	Connector type	Manufacturer
CNX7	53460-0629 (or equivalent)	Molex Inc.
CNX6	53460-0629 (or equivalent)	Molex Inc.
CNX5	529865079 (or equivalent)	Molex Inc.
CNX4	MD-S8000-10 (or equivalent)	J.S.T. Mfg.Co., Ltd.
CNX3	MD-S8000-10 (or equivalent)	J.S.T. Mfg.Co., Ltd.
CNX2	S06B-F32SK-GGXR (or equivalent)	J.S.T. Mfg.Co., Ltd.
CNX1	S04B-F32SK-GGXR (or equivalent)	J.S.T. Mfg.Co., Ltd.

Connector at Power Supply and Motor side

Connector sign	Connector type	Manufacturer
CNX2	06JFAT-SAXGF (or equivalent)	J.S.T. Mfg.Co., Ltd.
CNX1	04JFAT-SAXGF (or equivalent)	J.S.T. Mfg.Co., Ltd.

Mass 1.1kg

Driver/Dimensions

Frame C

[unit: mm]

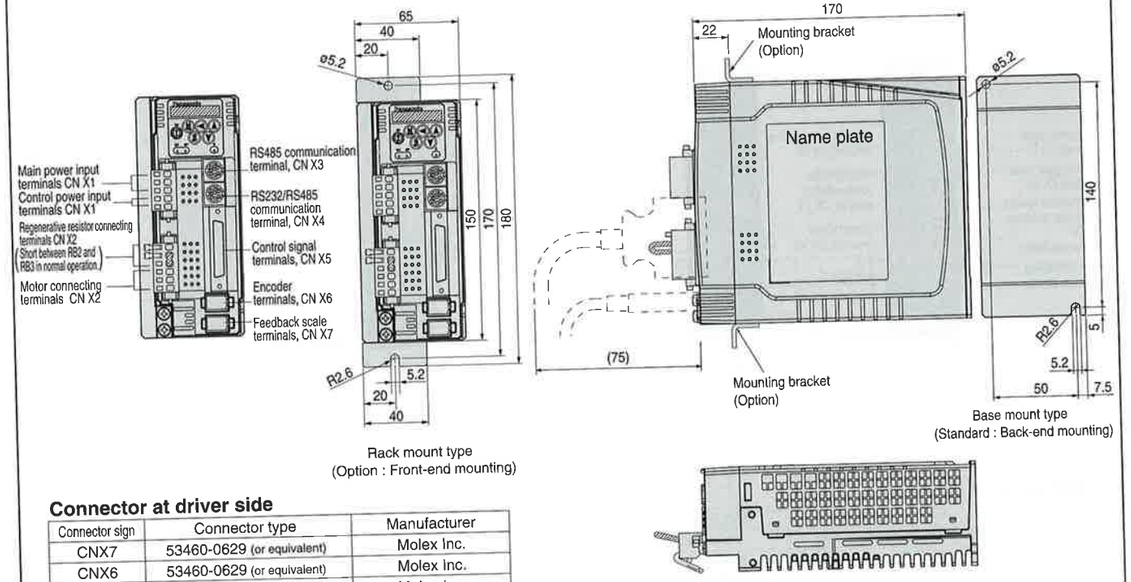

Connector at driver side

Connector sign	Connector type	Manufacturer
CNX7	53460-0629 (or equivalent)	Molex Inc.
CNX6	53460-0629 (or equivalent)	Molex Inc.
CNX5	529865079 (or equivalent)	Molex Inc.
CNX4	MD-S8000-10 (or equivalent)	J.S.T. Mfg.Co., Ltd.
CNX3	MD-S8000-10 (or equivalent)	J.S.T. Mfg.Co., Ltd.
CNX2	S06B-F32SK-GGXR (or equivalent)	J.S.T. Mfg.Co., Ltd.
CNX1	S05B-F32SK-GGXR (or equivalent)	J.S.T. Mfg.Co., Ltd.

Connector at Power Supply and Motor side

Connector sign	Connector type	Manufacturer
CNX2	06JFAT-SAXGF (or equivalent)	J.S.T. Mfg.Co., Ltd.
CNX1	05JFAT-SAXGF (or equivalent)	J.S.T. Mfg.Co., Ltd.

Mass 1.5kg

Frame D

[unit: mm]

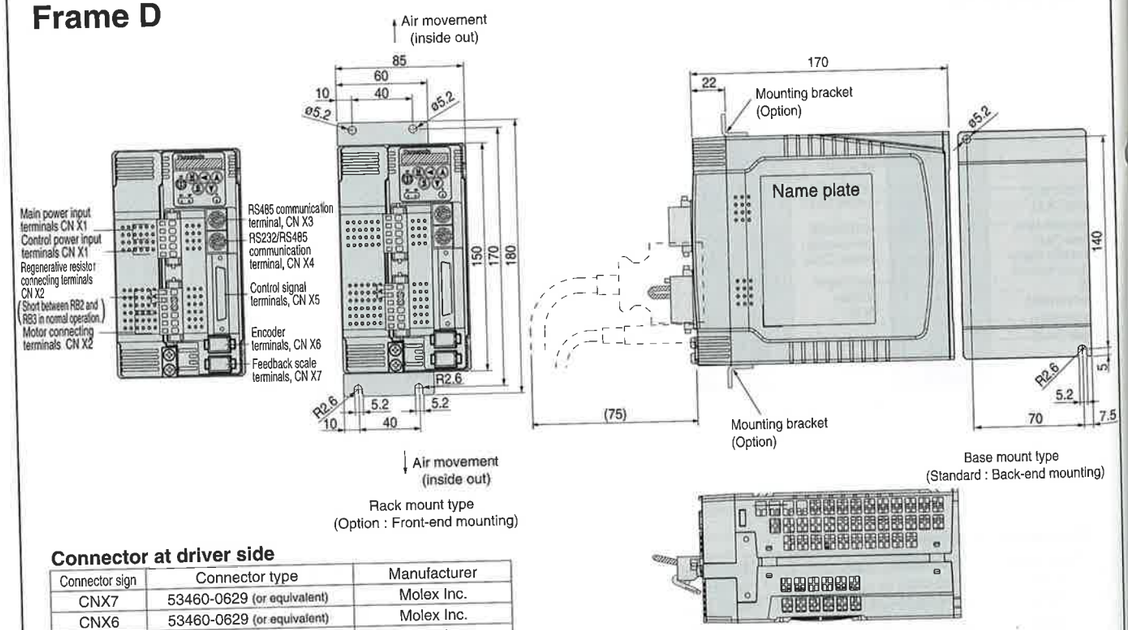

Connector at driver side

Connector sign	Connector type	Manufacturer
CNX7	53460-0629 (or equivalent)	Molex Inc.
CNX6	53460-0629 (or equivalent)	Molex Inc.
CNX5	529865079 (or equivalent)	Molex Inc.
CNX4	MD-S8000-10 (or equivalent)	J.S.T. Mfg.Co., Ltd.
CNX3	MD-S8000-10 (or equivalent)	J.S.T. Mfg.Co., Ltd.
CNX2	S06B-F32SK-GGXR (or equivalent)	J.S.T. Mfg.Co., Ltd.
CNX1	S05B-F32SK-GGXR (or equivalent)	J.S.T. Mfg.Co., Ltd.

Connector at Power Supply and Motor side

Connector sign	Connector type	Manufacturer
CNX2	06JFAT-SAXGF (or equivalent)	J.S.T. Mfg.Co., Ltd.
CNX1	05JFAT-SAXGF (or equivalent)	J.S.T. Mfg.Co., Ltd.

Mass 1.7kg

Frame E

[unit: mm]

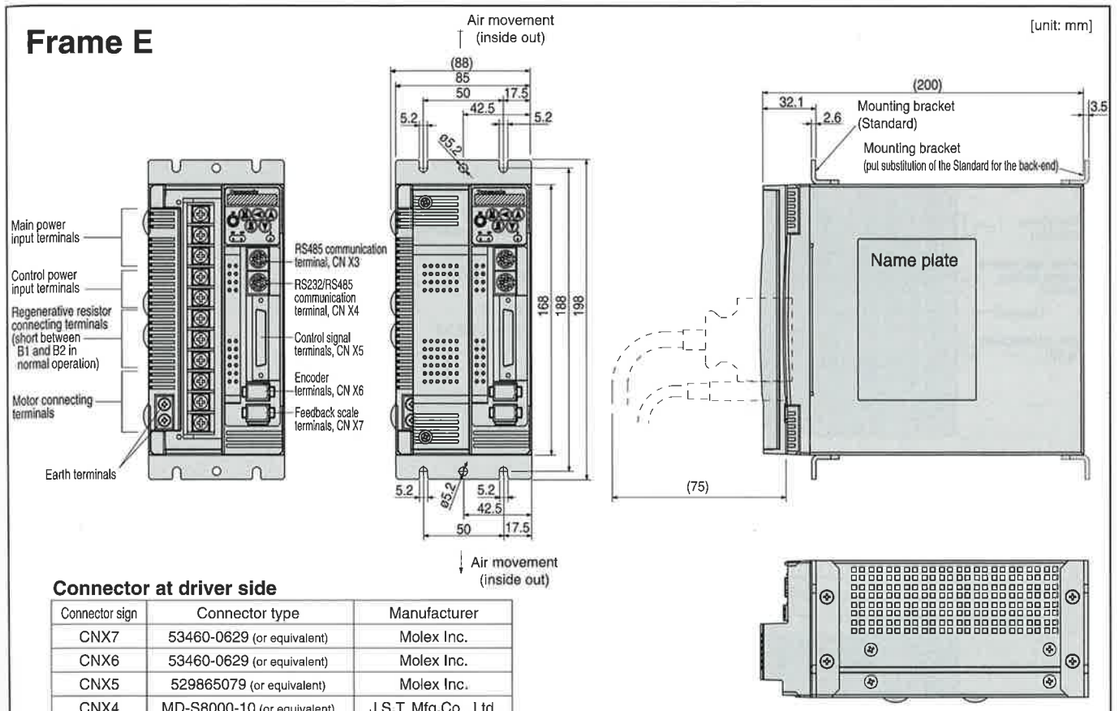

Connector at driver side

Connector sign	Connector type	Manufacturer
CNX7	53460-0629 (or equivalent)	Molex Inc.
CNX6	53460-0629 (or equivalent)	Molex Inc.
CNX5	529865079 (or equivalent)	Molex Inc.
CNX4	MD-S8000-10 (or equivalent)	J.S.T. Mfg.Co., Ltd.
CNX3	MD-S8000-10 (or equivalent)	J.S.T. Mfg.Co., Ltd.

Mass 3.2kg

Frame F

[unit: mm]

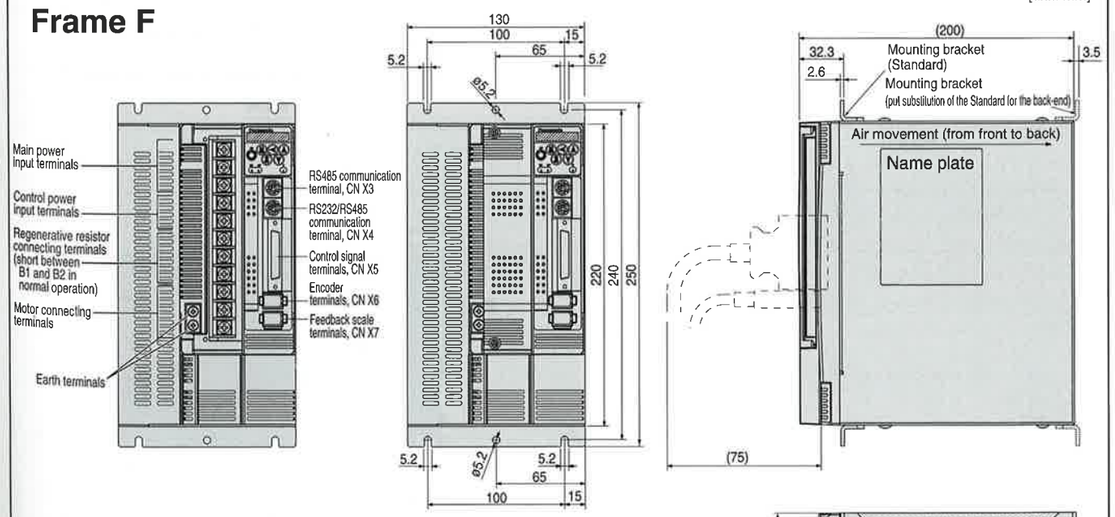

Connector at driver side

Connector sign	Connector type	Manufacturer
CNX7	53460-0629 (or equivalent)	Molex Inc.
CNX6	53460-0629 (or equivalent)	Molex Inc.
CNX5	529865079 (or equivalent)	Molex Inc.
CNX4	MD-S8000-10 (or equivalent)	J.S.T. Mfg.Co., Ltd.
CNX3	MD-S8000-10 (or equivalent)	J.S.T. Mfg.Co., Ltd.

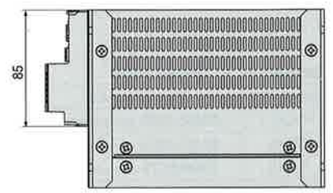

Mass 6.0kg

Driver/Dimensions

[unit: mm]

Frame G

[Terminal block cover B opened]

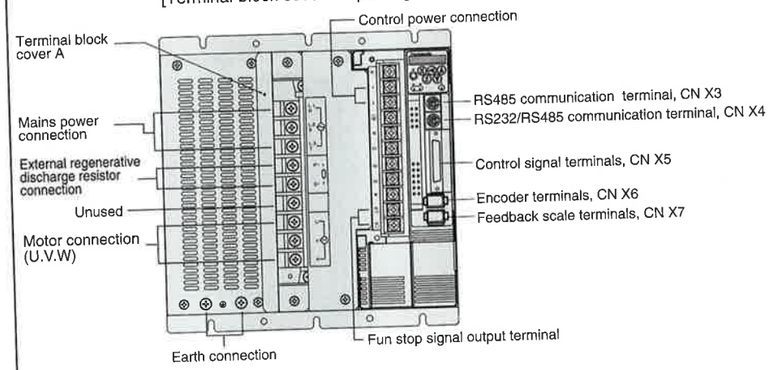

[Terminal block cover B closed]

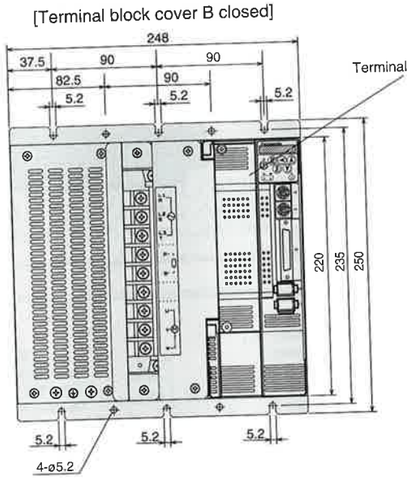

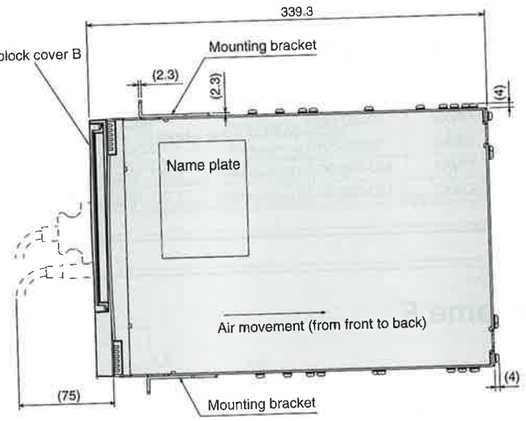

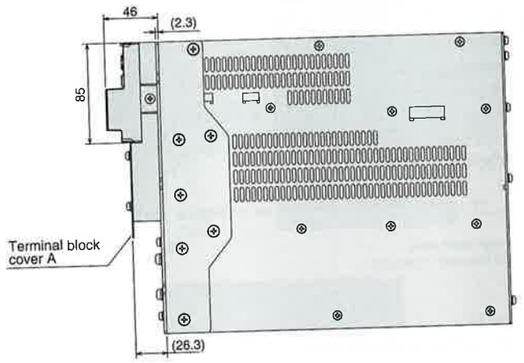

Connector at driver side

Connector sign	Connector type	Manufacturer
CNX7	53460-0629 (or equivalent)	Molex Inc.
CNX6	53460-0629 (or equivalent)	Molex Inc.
CNX5	529865079 (or equivalent)	Molex Inc.
CNX4	MD-S8000-10 (or equivalent)	J.S.T. Mfg.Co., Ltd.
CNX3	MD-S8000-10 (or equivalent)	J.S.T. Mfg.Co., Ltd.

Mass 17.0kg

MEMO

I/O Command Type Servo Motor Inherits Strongest Servo Core

MINAS A4P Series

Achieves System Simplification and Cost Reduction

1.Built-in NC Functions

- NC functions allow positioning by I/O command only.
- A target can be positioned (by teaching) without complicated pulse calculations.
- In addition to travel distances, point tables combine 16 types of preset speeds, linear acceleration/deceleration or S-shaped acceleration/deceleration, and 4 types of acceleration and deceleration.
- Two types of continuous operations are available depending on required machine specifications; continuous positioning with a temporary stop at any point and a combined block operation without a temporary stop.
- Sequential operation can be set to execute a maximum of 60 positioning points automatically.
- 8 types of homing operation modes are available. If a bumping homing is selected, simplified return-to-origin can be executed without any origin sensor.

2.Neither a positioning unit nor a pulse generator is required

- A maximum of 60 positioning points can be stored. No complicated programming is required as before.
- Positioning points can be specified as absolute positions or relative positions.
- Positioning can be performed directly at an absolute position without requiring homing operation by using the MINAS A4P as an absolute encoder in combination with a motor equipped with a 17-bit absolute/incremental encoder.

• This product is for industrial equipment. Don't use this product at general household.

Details of Features

Inherits high performance and advanced functioning

1. Further Adjustment-Free Operation

High-functionality Real-Time Auto-Gain Tuning

- Corresponds to even variation of load inertia. Offers real automatic gain tuning to low and high stiffness machines with a combination of an adaptive filter.
- Supports the vertical axis application where the load torque is different in rotational direction.
- Prevents the machine from over-traveling during automatic gain tuning with software limit protective function.

Waveform adjusted via auto-tuning driven by a ball screw

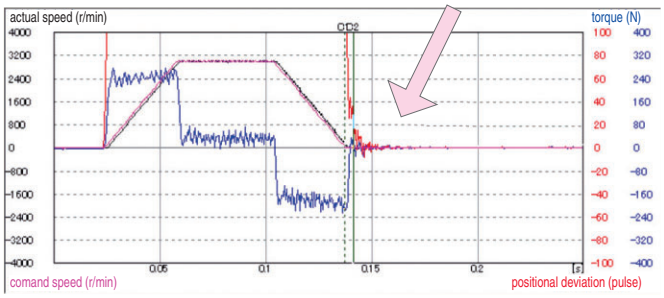

2. Further High-Speed and High-Response

Velocity response (bandwidth) of 1kHz

- Implementation of Instantaneous Velocity Observer realizes a detection of motor speed with higher speed and higher resolution.

*) In case of high stiffness machine

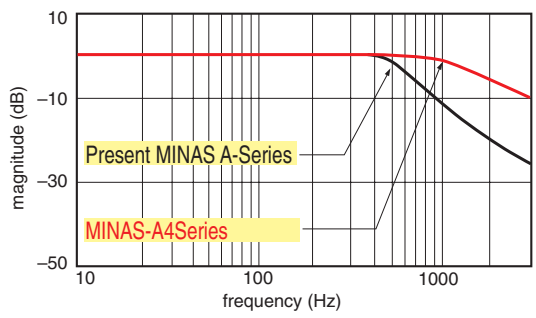

Variation of detected speed at stopping

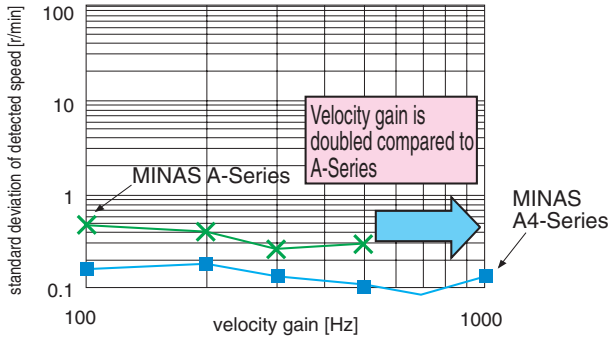

High-functionality Real-Time Auto-Gain Tuning

- Supports the low stiffness machine of belt-driven and the high stiffness machine of short stroke ball screw driven, and enables to realize high-speed positioning with high-functionality real-time auto-gain tuning.

3. Further Reduction of Vibration

Adaptive filter

- Makes the notch filter frequency automatically follow the machine resonance frequency.
- Suppression of "Judder" noise of the machine can be expected which is caused by variation of the machines or resonance frequency due to aging.

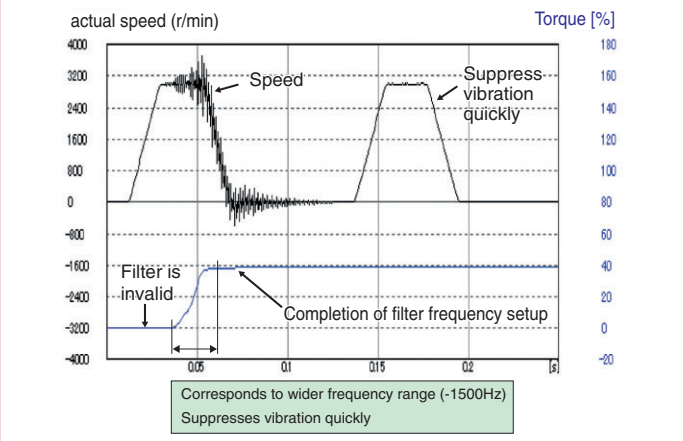

2-channel notch filters

- 2-channel notch filters are equipped in the driver independent from adaptive filter.
- You can set up both frequency and width for each of 2 filters, and set up frequency in unit of 1Hz.
- Suppression of "Judder" noise of the machine which has multiple resonance points can be expected

Effect of notch filter

without notch filter

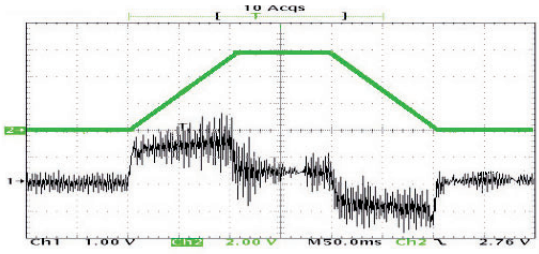

with notch filter

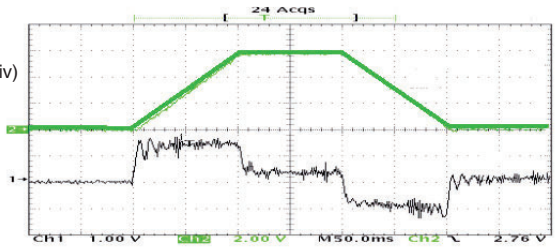

speed (1000r/min/div)

torque (33.3%/div)

50ms/div 50ms/div

Damping control

- 2-channel damping filters are equipped in this driver. You can suppress vibration occurring at both starting and stopping in low stiffness machine, by manually setting up vibration frequency in 0.1Hz unit.
- You can also switch the vibration frequency set by 2-channel with rotating direction or with an external input to correspond to the variation of vibration frequency caused by the machine position.
- Easy setup with entry of only frequency and filter value. Improper setup values do not result in unstable operation

motor movement

machine movement

without damping control

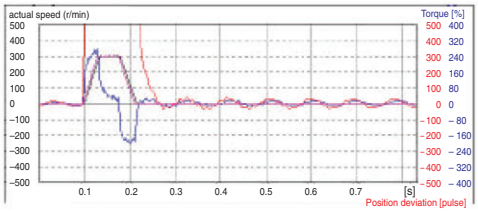

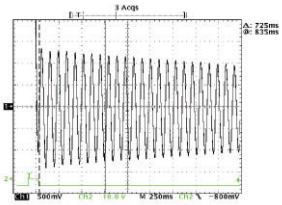

with damping control

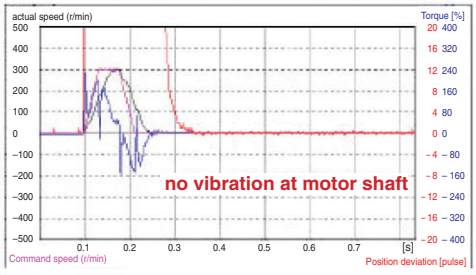

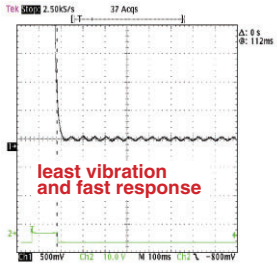

4. Further Flexibility and Multiplicity

Dedicated Console (DV0P4420)

- Enables easy parameter setting/changing, control state monitoring, status/error log viewing, and parameter saving/loading.
- Makes it easy to move a target position, set a positioning point and perform teaching.
- Can select and display 16 types of operation data including motor rotational speed and torque in the monitor mode.

Control Mode

- Makes it possible to select position control via the motor´s internal encoder or fully-closed control based on an feedback scale.

Analog Monitor Terminal

- "Motor rotational speed", "Command speed", "torque command" and "positional deviation" can be observed by oscilloscope through the analog monitor pin at the front panel of the driver.

Trial run (JOG)

- Features the function for trial (JOG) run through console (option) without connecting to a host controller.
- You can shorten the machine setup time.

Full-closed control (High precision positioning)

- Features the full-closed control of position and velocity, using the signals from feedback scale installed on the load side and high resolution encoder.

Note) Applicable feedback scales are as follows,

- Made by Mitsutoyo

	Resolution(μm)	Max. Speed*(m/s)
ABS AT573A Series	0.05	2
ABS ST771A Series	0.5	5
ABS ST773A Series	0.1	4
ABS ST771AL Series	0.5	5
ABS ST773AL Series	0.1	4

(* The maximum speed depends on the driver performance. It is limited by the machine configuration and system configuration.)

- Best suits to high precision machines.

Inrush current suppressing function

- Inrush suppressing resister is equipped in this driver, which prevents the circuit breaker shutdown of the power supply caused by inrush current at power-on.
- Prevents unintentional shutdown of the power supply circuit breaker in multi-axes application and does not give load to the power line.

Regeneration discharging function

- Discharges the regenerative energy with resister, which energy is generated while stopping the load with large moment of inertia, or use in up-down operation, and is returned to the driver from the motor.
- No regeneration discharge resistor is built-in to Frame A driver (MADDT1105P type.) and Frame B driver (MBDDT2210P type.), and we recommend you to connect optional regenerative resistor.
- Regenerative resistor is built-in to Frame C to F drivers, however, connection of the optional regenerative resistor bring you further regenerative capability.

Built-in dynamic brake

- You can select the dynamic brake action which short the servo motor windings of U, V and W, at Servo-OFF, CW/CCW over-travel inhibition, power shutdown and trip.
- You can select the action sequence setup depending on the machine requirement.

Setup support software

- With the setup support software, "PANATERM" via RS232 communication port, you can monitor the running status of the driver and set up parameters.

Wave-form graphic function

- With the setup support software, "PANATERM" , you can monitor the "Command speed" , "Actual speed" ,"Torque" , "Position deviation " and "Positioning complete signal" .
- Helps you to analyze the machine and shorten the setup time

* Note) Refer to page "F2" for setup support software.

Selectable Torque Limit Value

- A torque limit can be set for each rotational direction.
- According to the specification of the machine, a maximum torque can be set for each rotational direction as necessary.

Built in sequence of bumping homing

- You can select 8 kind of homing mode.
  - Home sensor (based on the front end)
  - Home sensor + Z phase (based on the front end)
  - Home sensor + Z phase (based on the rear end)
  - Limit sensor
  - Limit sensor + Z phase
  - Z phase homing
  - Bumping homing
  - Data set

SEMI F47 voltage sag immunity

- Features the function which complies to voltage sag immunity standard of SEMI F47 at no load or light load.
- Useful for semiconductor industry.

Notes)
1) Not applicable to single phase, 100V type.
2) Verify with the actual machine condition to F47, voltage sag immunity standard.

Frequency analyzing function

- You can confirm the response frequency characteristics of total machine mechanism including the servo motor with the setup support software, "PANATERM"
- Helps you to analyze the machine and shorten the setup time

*Note) Refer to page "F2" for setup support software.

Applicable overseas safety standards

Subject	Standard conformed		
Motor	IEC60034-1 IEC60034-5 UL1004 CSA22.2 No.100		Conforms to Low-Voltage Directives
Motor and driver	EN50178 UL508C CSA22.2 No.14		
	EN55011	Radio Disturbance Characteristics of Industrial, Scientific and Medical (ISM) Radio-Frequency Equipment	Conforms to references by EMC Directives
	EN61000-6-2	Immunity for Industrial Environments	
	IEC61000-4-2	Electrostatic Discharge Immunity Test	
	IEC61000-4-3	Radio Frequency Electromagnetic Field Immunity Test	
	IEC61000-4-4	Electric High-Speed Transition Phenomenon/ Burst Immunity Test	
	IEC61000-4-5	Lightening Surge Immunity Test	
	IEC61000-4-6	High Frequency Conduction Immunity Test	
	IEC61000-4-11	Instantaneous Outage Immunity Test	

I E C : International Electrotechnical Commission
E N : Europaischen Normen
EMC : Electromagnetic Compatibility
U L : Underwriters Laboratories
CSA : Canadian Standards Association

Pursuant to at the directive 2004/108/EC,article 9(2)

Panasonic Testing Centre
Panasonic Service Europe,
a division of Panasonic Marketing Europe GmbH
Winsbergring 15,22525 Hamburg,F.R.Germany

* When export this product, follow statutory provisions of the destination country.

Motor Line-up

	Motor series *	Rated output (kW)	Rated rotational speed (Max. speed) (r/min)	Rotary encoder		Brake	Gear	CE/UL	Enclosure	Features	Applications
				2500P/r incremental	17bit absolute/ incremental	Holding	High precision				
Ultra low inertia	MAMA	0.1-0.75 4 models 0.1, 0.2, 0.4 and 0.75	5000 (6000)	○	○	○	—	○	IP65 (Except shaft through hole and connector)	·Small capacity ·Suitable for the machines directly coupled with high speed ball screw and high stiffness and high repetitive application	·SMT machines ·Inserters ·High repetitive positioning application
Low inertia	MSMD	0.05-0.75 5 models 0.05, 0.1, 0.2, 0.4 and 0.75	3000 (5000) *For 400W/100V and 750W 3000 (4500)	○	○	○	○	○	IP65 (Except shaft through hole and connector)	·Small capacity ·Suitable for all applications	·Inserters ·Belt driven machines ·Unloading robot
	MQMA (Cube type)	0.1-0.4 3 models 0.1, 0.2, and 0.4	3000 (5000) *For 400W/100V 3000 (4500)	○	○	○	—	○	IP65 (Except shaft through hole and connector)	·Small capacity ·Suitable for flat type and low stiffness machines with belt driven	·SMT machines ·Inserters ·Belt driven machines ·Unloading robot
	MSMA	1.0-5.0 6 models 1.0,1.5,2.0, 3.0,4.0 and 5.0	3000 (5000) *For 4kW and 5kW 3000 (4500)	○	○	○	—	○	IP65 (Except cannon plug/ connector pins)	·Middle capacity ·Suitable for the machines directly coupled with ball screw and high stiffness and high repetitive application	·SMT machines ·Inserter ·Food machines
Middle inertia	MDMA	1.0-5.0 6 models 1.0,1.5,2.0, 3.0,4.0 and 5.0	2000 (3000)	○	○	○	—	○	IP65 (Except cannon plug/ connector pins)	·Middle capacity ·Suitable for low stiffness machines with belt driven	·Belt driven machines ·Conveyers ·Robots
	MGMA (Low speed/ High torque type)	0.9-4.5 4 models 0.9,2.0,3.0 and 4.5	1000 (2000)	○	○	○	—	○	IP65 (Except cannon plug/ connector pins)	·Middle capacity ·Suitable for machines requiring low speed with high torque	·Belt driven machines ·Conveyers ·Robots
	MFMA (Flat type) 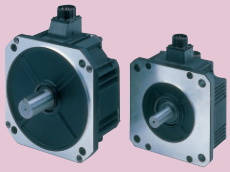	0.4-4.5 4 models 0.4,1.5, 2.5 and 4.5	2000 (3000)	○	○	○	—	○	IP65 (Except cannon plug/ connector pins)	·Middle capacity ·Flat type and suitable for machines with space limitation	·Robots ·Food machines
High inertia	MHMA	0.5-5.0 7 models 0.5,1.0,1.5, 2.0,3.0,4.0 and 5.0	2000 (3000)	○	○	○	—	○	IP65 (Except cannon plug/ connector pins)	·Middle capacity ·Suitable for low stiffness machines with belt driven, and large load moment of inertia	·Belt driven machines ·Conveyors ·Robots

* Motor is sharing with A4/A4F series

Model Designation

● Servo Motor

M S M D 5 A Z S 1 S * *

Special specifications

Symbol	Type
MAMA	Ultra low inertia (100W-750W)
MSMD	Low inertia (50W-750W)
MQMA	Low inertia (100W-400W)
MSMA	Low inertia (1.0kW-5.0W)
MDMA	Middle inertia (1.0kW-5.0kW)
MGMA	Middle inertia (900W-4.5kW)
MFMA	Middle inertia (400W-4.5kW)
MHMA	High inertia (500W-5.0kW)

Design order
1 : Standard

Rotary encoder specifications

Symbol	Format	Pulse counts	Resolution	Wires
P	Incremental	2500P/r	10000	5
S	Absolute/ Incremental common	17bit	131072	7

Voltage specifications

Symbol	Specifications
1	100V
2	200V
Z	100V/200V common(50W only)

Motor rated output

Symbol	Rated output	Symbol	Rated output
5A	50W	15	1.5kW
01	100W	20	2.0kW
02	200W	25	2.5kW
04	400W	30	3.0kW
05	500W	40	4.0kW
08	750W	45	4.5kW
09	900W	50	5.0kW
10	1.0kW		

Motor structure

MSMD(standard stock), MQMA(build to order)

Symbol	Shaft		Holding brake		Oil seal	
	Round	Key-way, center tap	without	with	without	with*
A	●		●		●	
B	●			●	●	
S		●	●		●	
T		●		●	●	

*Motor with oil seal is manufactured by order.

MSMA , MDMA , MGMA , MFMA , MHMA

Symbol	Shaft		Holding brake		Oil seal	
	Round	Key-way	without	with	without	with
C	●		●			●
D	●			●		●
G		●	●			●
H		●		●		●

Products are standard stock items or build to order items. See index (page F31).

MAMA

Symbol	Shaft		Holding brake		Oil seal	
	Round	Key-way	without	with	without	with
A	●		●		●	
B	●			●	●	
E		●	●		●	
F		●		●	●	

Products are standard stock items or build to order items. See index (page F31).

See page, A4-77 for motor specifications

● Motor with reduction gear

M S M D 0 1 1 P 3 1 N

Symbol	Type
MSMD	Low inertia (100W-750W)

Motor rated output

Symbol	Rated output
01	100W
02	200W
04	400W
08	750W

Voltage specifications

Symbol	Specifications
1	100V
2	200V

Rotary encoder specifications

Symbol	Format	Pulse counts	Resolution	Wires
P	Incremental	2500P/r	10000	5
S	Absolute/ Incremental common	17bit	131072	7

Gear reduction ration, gear type

Symbol	Gear reduction ratio	Motor output (W)				Gear type
		100	200	400	750	
1N	1 / 5	●	●	●	●	For high accuracy
2N	1 / 9	●	●	●	●	
3N	1 / 15	●	●	●	●	
4N	1 / 25	●	●	●	●	

Motor structure

Symbol	Shaft	Holding brake	
	Key-way	without	with
3	●	●	
4	●		●

See page, A4-133 for motor with gear reducer specifications

● Servo Driver

M A D D T 1 2 0 5 P * *

Special specifications

Frame symbol

Symbol	Frame
MADD	A4 series, Frame A
MBDD	A4 series, Frame B
MCDD	A4 series, Frame C
MDDD	A4 series, Frame D
MEDD	A4 series, Frame E
MFDD	A4 series, Frame F

Power device Max. current rating

Symbol	Power device Max. current rating
T1	1 0A
T2	1 5A
T3	3 0A
T5	5 0A
T7	7 5A
TA	1 0 0A
TB	1 5 0A

Supply voltage specifications

Symbol	Specifications
1	Single phase, 100V
2	Single phase, 200V
3	3-phase, 200V
5	Single/3-phase,200V

Current detector current rating

Symbol	Current detector, current rating
05	5A
07	7.5A
10	1 0A
20	2 0A
30	3 0A
40	4 0A
64	6 4A
90	9 0A
A2	1 2 0A

Interface

Symbol	Specifications
P	I/O Operation

See page, A4-67 for driver specifications

Wiring example

Driver Frame Type Symbol (Frame A, B, C, D)

For details, refer to the Instruction Manual.

● Wiring of main circuit

Circuit Breaker (NFB)
Protects the power lines.
Shuts off the circuit when overcurrent passes.

Noise Filter (NF)
Prevents external noise from the power lines.
And reduces an effect of the noise generated by the servo driver.

Magnetic Contactor (MC)
Turns on/off the main power of the servo driver.
Surge absorber to be used together with this.

Reactor (L)
Reduces harmonic current of the main power.

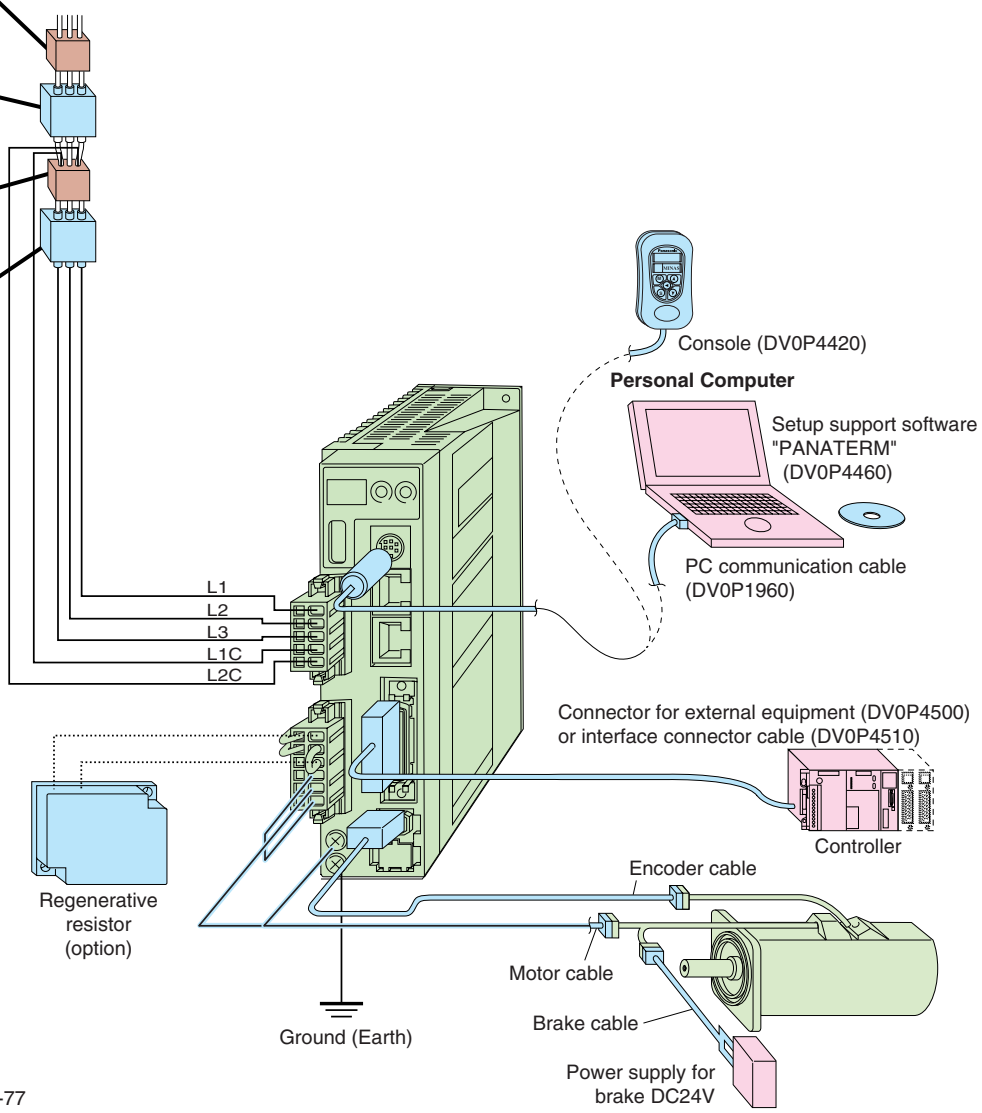

Pin RB, RB2 and RB3 ...

- RB2 and RB3 to be kept shorted for normal operation.
- When the internal regenerative resistor capacity has shortage, disconnect between RB2 and RB3, then connect an external regenerative resistor between RB1 and RB2. (Note: that no regenerative resistor is equipped in Frame A and B type.)

Motor	to page A4-77
Driver	to page A4-67
Option	to page A4-141
Recommended equipments	to page A4-64
Parts customer to prepare	

Driver Frame Type Symbol (Frame E, F)

For details, refer to the Instruction Manual.

• Wiring of main circuit

Circuit Breaker (NFB)
Protects the power lines.
Shuts off the circuit when overcurrent passes.

Noise Filter (NF)
Prevents external noise from the power lines.
And reduces an effect of the noise generated by the servo driver.

Magnetic Contactor (MC)
Turns on/off the main power of the servo driver.
Surge absorber to be used together with this.

Reactor (L)
Reduces harmonic current of the main power.

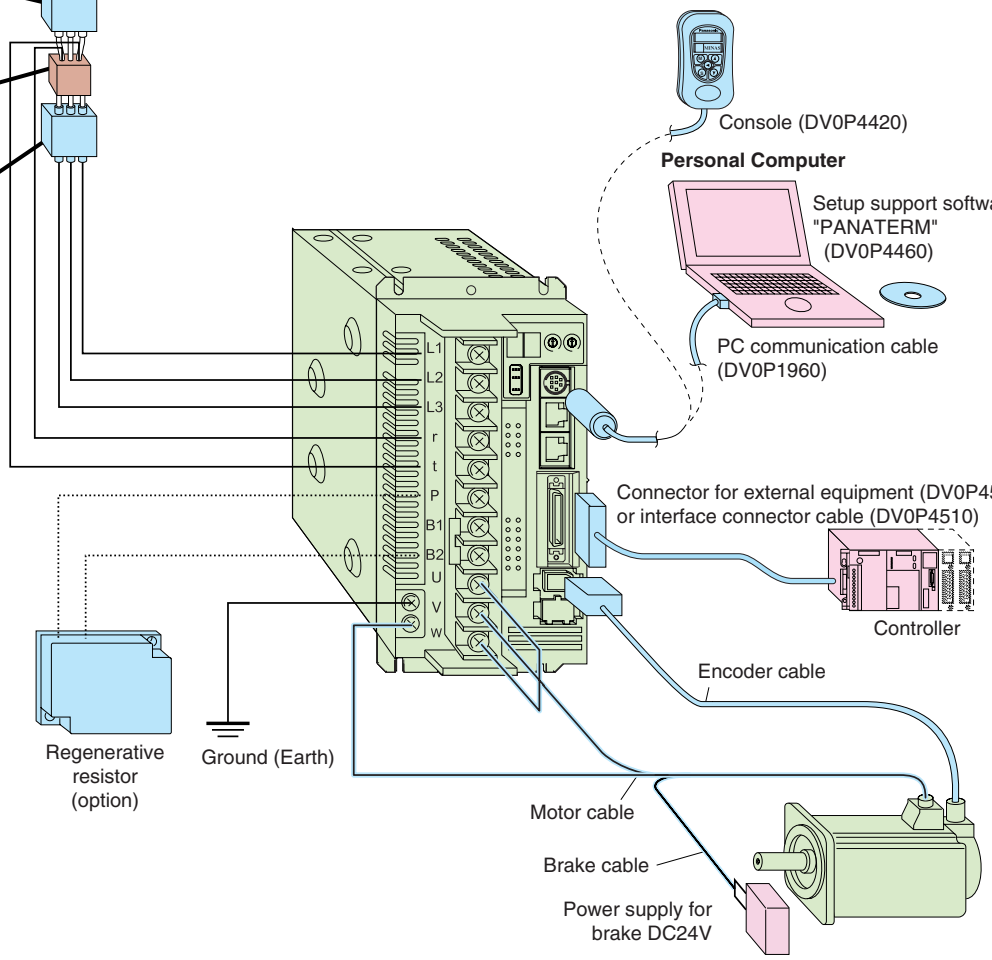

Pin P, B1 and B2 ...
- B1 and B2 to be kept shorted for normal operation.
- When the internal regenerative resistor capacity has shortage, disconnect between B1 and B2, then connect an external regenerative resistor between P and B2.

Motor	to page A4-77
Driver	to page A4-67
Option	to page A4-141
Recommended equipments	to page A4-64
Parts customer to prepare	

Wiring example

● List of recommended peripheral equipments

Power supply voltage	Applicable motor Series	Applicable motor Output	Power capacity (atrated load)	Circuit breaker (rated current)	Noise filter	Surge absorber	Noise filter (signal)	Magnetic contactor (Contact)	Cable diameter (Main circuit)	Cable diameter (controlcircuit)	Connector
Single phase, 100V	MSMD	50W	Approx. 0.4kVA	BBW2102 (10A)	DVOP4170	DVOP4190	DVOP1460	BMFT61041N (3P+1a)	0.75mm^2 to 2.0mm^2 AWG14 to 18	0.75mm^2 AWG18	Connection to exclusive connector
	MSMD MQMA	100W									
		200W	Approx. 0.5kVA								
		400W	Approx. 0.9kVA		DVOP4180			BMFT61541N (3P+1a)			
Single phase, 200V	MSMD	50W	Approx. 0.5kVA		DVOP4170			BMFT61542N (3P+1a)			
		100W									
	MAMA MQMA	100W	Approx. 0.3kVA								
	MAMA MSMD MQMA	200W	Approx. 0.5kVA								
	MSMD MQMA	400W	Approx. 0.9kVA								
Single/ 3-phase, 200V	MAMA MFMA	400W	Approx. 0.9kVA	BBW3152 (15A)	DVOP4180	DVOP1450					
	MHMA	500W	Approx. 1.1kVA								
	MSMD	750W	Approx. 1.3kVA								
	MAMA		Approx. 1.6kVA		DVOP4220			BMFT61842N (3P+1a)	2.0mm^2 AWG14		
	MDMA MHMA	1.0kW	Approx. 1.8kVA								
	MGMA	900W		BBW3202 (20A)							
	MSMA	1.0kW									
	MSMA MDMA MFMA MHMA	1.5kW	Approx. 2.3kVA								
3-phase, 200V	MSMA MDMA MHMA	2.0kW	Approx. 3.3kVA	BBW3302 (30A)	DVOP4220			BMF6352N (3P+2a2b)			Terminal block M5 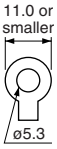
	MFMA	2.5kW	Approx. 3.8kVA						3.5mm^2 AWG12		
	MGMA	2.0kW		BBW350S (50A)	DVOP3410						
	MSMA MDMA MHMA MGMA	3.0kW	Approx. 4.5kVA								
	MSMA MDMA MHMA	4.0kW	Approx. 6.0kVA					BMF6652N (3P+2a2b)			
	MFMA	4.5kW	Approx. 6.8kVA								
	MGMA		Approx. 7.5kVA						5.3mm^2 AWG10		
	MSMA MDMA MHMA	5.0kW									

- Select a single and 3-phase common specifications corresponding to the power supplies.
- Listed circuit breaker and magnetic contactor are manufactured by Panasonic Electric Works.
  To conform to EC Directives, install a circuit breaker which conforms to IEC and UL Standards (Listed, UL marked) between noise filter and power supply without fail.
- For details of noise filter, refer to Page A4-138.

<Remarks>

- Select a circuit breaker and noise filter which match to the capacity of power supply (including a load condition).
- Terminal block and earth terminals
  - Use a copper conductor cables with temperature rating of 60˚C or higher.
  - Earth terminals for Frame A to D are M4 and M5 for Frame E, F.
  - Larger tightening toque for screws than the max.value (M4 : 1.2 N·m, M5 : 2.0 N·m) may damage the terminal block.
  - Mounting screws on the cover of terminal block for frames E, F should be tightened with 0.2 N·m torque.
    Application of torque larger than 0.2 N·m may damage the thread on the driver.
- Use an earth cable with the same diameter as that of the main circuit cable.
  If the diameter of the main circuit cable is 1.6mm^2 or less, use an earth cable with a diameter of 1.6mm^2 (AWG14).
- Use the attached exclusive connector for A to D-frame, and maintain the peeled off length of 8 tot 9mm.
- Tighten the screws of the connector, CN X5 for the host controller with the torque of 0.2±0.05 N·m.
- Larger torque than 0.25N·m may damage the connector at the driver side.

<Caution>

Do not turn on power without first positively tightening all terminal block screws, otherwise, loose contacts may generate heat (smoking, firing).

Table of Part Numbers and Options

Motor series	Power supply	Rated rotational speed (r/min)	Output (W)	2500P/r, Incremental: Motor Note) 1	Rating/ Spec. (page)	Encoder cable Note) 2	17bit, Absolute/Incremental common: Motor Note) 1	Rating/ Spec. (page)	Encoder cable Note) 2	Encoder cable Note) 2	2500P/r and 17bit common: Driver	Frame symbol		Optional parts: Motor cable Note) 2	Motor cable (with brake) Note) 2	Brake cable Note) 2	Regenerative resistor	Reactor	Noise filter
MAMA [Ultra low inertia]	Single phase 200V	5000	100	MAMA012P1□	A4-77	MFECA 0**0EAM	MAMA012S1□	A4-77	MFECA 0**0EAE	MFECA 0**0EAD	MADDT1207P	A-frame		MFMCA 0**0EED	—	MFMCB 0**0GET	DV0P4283	DV0P220	DV0P4170
			200	MAMA022P1□			MAMA022S1□				MBDDT2210P	B-frame							
			400	MAMA042P1□			MAMA042S1□				MCDDT3520P	C-frame					DV0P4284	DV0P221	DV0P4180
			750	MAMA082P1□			MAMA082S1□				MDDDT5540P	D-frame							DV0P4220
	3-phase, 200V	5000	400	MAMA042P1□			MAMA042S1□				MCDDT3520P	C-frame					DV0P4283	DV0P220	DV0P4180
			750	MAMA082P1□			MAMA082S1□				MDDDT5540P	D-frame					DV0P4284	DV0P221	DV0P4220
MSMD [low inertia]	Single phase 100V	3000	50	MSMD5AZP1□	A4-79	MFECA 0**0EAM	MSMD5AZS1□	A4-79	MFECA 0**0EAE	MFECA 0**0EAD	MADDT1105P	A-frame		MFMCA 0**0EED	—	MFMCB 0**0GET	DV0P4280	DV0P227	DV0P4170
			100	MSMD011P1□			MSMD011S1□				MADDT1107P								
			200	MSMD021P1□	A4-81		MSMD021S1□	A4-81			MBDDT2110P	B-frame					DV0P4283	DV0P228	
			400	MSMD041P1□			MSMD041S1□				MCDDT3120P	C-frame					DV0P4282		DV0P4180
	Single phase 200V	3000	50	MSMD5AZP1□	A4-83		MSMD5AZS1□	A4-83			MADDT1205P	A-frame					DV0P4281	DV0P220	DV0P4170
			100	MSMD012P1□			MSMD012S1□				MADDT1205P								
			200	MSMD022P1□	A4-85		MSMD022S1□	A4-85			MADDT1207P						DV0P4283		
			400	MSMD042P1□			MSMD042S1□				MBDDT2210P	B-frame							
			750	MSMD082P1□			MSMD082S1□				MCDDT3520P	C-frame						DV0P221	DV0P4180
	3-phase, 200V	3000	750	MSMD082P1□			MSMD082S1□				MCDDT3520P								
MQMA [Low inertia Cube type]	Single phase 100V	3000	100	MQMA011P1□	A4-87	MFECA 0**0EAM	MQMA011S1□	A4-87	MFECA 0**0EAE	MFECA 0**0EAD	MADDT1107P	A-frame		MFMCA 0**0EED	—	MFMCB 0**0GET	DV0P4280	DV0P227	DV0P4170
			200	MQMA021P1□			MQMA021S1□				MBDDT2110P	B-frame					DV0P4283	DV0P228	
			400	MQMA041P1□			MQMA041S1□				MCDDT3120P	C-frame					DV0P4282		DV0P4180
	Single phase 200V	3000	100	MQMA012P1□	A4-89		MQMA012S1□	A4-89			MADDT1205P	A-frame					DV0P4281	DV0P220	DV0P4170
			200	MQMA022P1□			MQMA022S1□				MADDT1207P						DV0P4283		
			400	MQMA042P1□			MQMA042S1□				MBDDT2210P	B-frame						DV0P221	
MSMA [low inertia]	Single phase 200V	3000	1000	MSMA102P1□	A4-91	MFECA 0**0ESD	MSMA102S1□	A4-91	MFECA 0**0ESE	MFECA 0**0ESD	MDDDT5540P	D-frame		MFMCD 0**2ECD	MFMCA 0**2FCD	—	DV0P4284	DV0P222	DV0P4220
			1500	MSMA152P1□			MSMA152S1□				MDDDT5540P								
	3-phase, 200V	3000	1000	MSMA102P1□			MSMA102S1□				MDDDT5540P								
			1500	MSMA152P1□			MSMA152S1□				MDDDT5540P								
			2000	MSMA202P1□			MSMA202S1□				MEDDT7364P	E-frame		MFMCD0**2ECT	MFMCA0**2FCT		DV0P4285	DV0P223	
			3000	MSMA302P1□	A4-93		MSMA302S1□	A4-93			MFDDTA390P	F-frame		MFMCA 0**3ECT	MFMCA 0**3FCT		DV0P4285 x 2 in parallel	DV0P224	DV0P3410
			4000	MSMA402P1□			MSMA402S1□				MFDDTB3A2P							DV0P225	
			5000	MSMA502P1□			MSMA502S1□				MFDDTB3A2P							—	
MDMA [Middle inertia]	Single phase 200V	2000	1000	MDMA102P1□	A4-95	MFECA 0**0ESD	MDMA102S1□	A4-95	MFECA 0**0ESE	MFECA 0**0ESD	MDDDT3530P	D-frame		MFMCD 0**2ECD	MFMCA 0**2FCD	—	DV0P4284	DV0P222	DV0P4220
			1500	MDMA152P1□			MDMA152S1□				MDDDT5540P								
	3-phase, 200V	2000 Note)3	1000	MDMA102P1□			MDMA102S1□				MDDDT3530P								
			1500	MDMA152P1□			MDMA152S1□				MDDDT5540P								
			2000	MDMA202P1□	A4-97		MDMA202S1□	A4-97			MEDDT7364P	E-frame		MFMCD0**2ECT	MFMCA0**2FCT		DV0P4285	DV0P223	
			3000	MDMA302P1□			MDMA302S1□				MFDDTA390P	F-frame		MFMCA 0**3ECT	MFMCA 0**3FCT		DV0P4285 x 2 in parallel	DV0P224	DV0P3410
			4000	MDMA402P1□	A4-99		MDMA402S1□	A4-99			MFDDTB3A2P							DV0P225	
			5000	MDMA502P1□			MDMA502S1□				MFDDTB3A2P							—	
MGMA [Middle inertia Low speed/ High torque]	Single phase 200V	1000	900	MGMA092P1□	A4-101	MFECA 0**0ESD	MGMA092S1□	A4-101	MFECA 0**0ESE	MFECA 0**0ESD	MDDDT5540P	D-frame		MFMCD 0**2ECD	MFMCA 0**2FCD	—	DV0P4284	DV0P222	DV0P4220
	3-phase, 200V	1000	900	MGMA092P1□			MGMA092S1□				MDDDT5540P								
			2000	MGMA202P1□			MGMA202S1□				MFDDTA390P	F-frame		MFMCA 0**3ECT	MFMCA 0**3FCT		DV0P4285 x 2 in parallel	DV0P223	
			3000	MGMA302P1□	A4-103		MGMA302S1□	A4-103			MFDDTB3A2							DV0P224	DV0P3410
			4500	MGMA452P1□			MGMA452S1□				MFDDTB3A2P							—	
MFMA [Middle inertia Flat type]	Single phase 200V	2000	400	MFMA042P1□	A4-105	MFECA 0**0ESD	MFMA042S1□	A4-105	MFECA 0**0ESE	MFECA 0**0ESD	MCDDT3520P	C-frame				—	DV0P4283	DV0P220	DV0P4180
			1500	MFMA152P1□			MFMA152S1□				MDDDT5540P	D-frame		MFMCA 0**2ECD	MFMCA 0**2FCD		DV0P4284	DV0P222	DV0P4220
	3-phase, 200V	2000 Note)3	400	MFMA042P1□			MFMA042S1□				MCDDT3520P	C-frame					DV0P4283	DV0P220	DV0P4180
			1500	MFMA152P1□			MFMA152S1□				MDDDT5540P	D-frame					DV0P4284	DV0P222	DV0P4220
			2500	MFMA252P1□	A4-107		MFMA252S1□	A4-107			MEDDT7364P	E-frame		MFMCD 0**3ECT	MFMCA 0**3FCT		DV0P4285	DV0P224	
			4500	MFMA452P1□			MFMA452S1□				MFDDTB3A2P	F-frame					DV0P4285 x 2 in parallel	—	DV0P3410
MHMA [High inertia]	Single phase 200V	2000	500	MHMA052P1□	A4-109	MFECA 0**0ESD	MHMA052S1□	A4-109	MFECA 0**0ESE	MFECA 0**0ESD	MCDDT3520P	C-frame		MFMCD 0**2ECD	MFMCA 0**2FCD	—	DV0P4283	DV0P220	DV0P4180
			1000	MHMA102P1□			MHMA102S1□				MDDDT3530P	D-frame					DV0P4284	DV0P222	DV0P4220
			1500	MHMA152P1□			MHMA152S1□				MDDDT5540P								
	3-phase, 200V	2000 Note)3	500	MHMA052P1□			MHMA052S1□				MCDDT3520P	C-frame					DV0P4283	DV0P220	DV0P4180
			1000	MHMA102P1□			MHMA102S1□				MDDDT3530P	D-frame					DV0P4284	DV0P222	DV0P4220
			1500	MHMA152P1□			MHMA152S1□				MDDDT5540								
			2000	MHMA202P1□	A4-111		MHMA202S1□	A4-111			MEDDT7364P	E-frame		MFMCA 0**3ECT	MFMCA 0**3FCT		DV0P4285	DV0P223	
			3000	MHMA302P1□			MHMA302S1□				MFDDTA390P	F-frame					DV0P4285 x 2 in parallel	DV0P224	DV0P3410
			4000	MHMA402P1□			MHMA402S1□				MFDDTB3A2P							DV0P225	
			5000	MHMA502P1□			MHMA502S1□				MFDDTB3A2P							—	

• Carrying page

Options		Part No.	Carrying page
Technical reference	Japanese	DV0P4480	—
	English	DV0P4490	—
Console		DV0P4420	A4-152
Setup support software, PANATERM	Japanese	DV0P4460	A4-151
	English		
RS232 communication cable (for connection with PC)		DV0P1960	A4-147
Interface cable		DV0P4510	A4-147
Connector kit for external equipment		DV0P4500	A4-146
Connector kit for power supply input	For A frame, B frame	DV0PM20093	
	For C frame, D frame	DV0PM20032	
Connector kit for motor connection (driver side)	For A frame to D frame	DV0PM20034	
Connector kit for motor and encoder		DV0P4290	A4-148
		DV0P4380	
		DV0P4310	A4-149
		DV0P4320	
		DV0P4330	
		DV0P4340	
Battery for absolute encoder		DV0P2990	A4-154
Mounting bracket	Frame A	DV0P4271	A4-151
	Frame B	DV0P4272	
	Frame C	DV0P4273	
	Frame D	DV0P4274	
Encoder cable	MFECA0**0EAD		A4-143
	MFECA0**0EAE		
	MFECA0**0EAM		
	MFECA0**0ESD		
	MFECA0**0ESE		
Motor cable	MFMCA0**0EED		A4-144
	MFMCA0**2ECD		
	MFMCA0**3ECT		
	MFMCD0**2ECD		
	MFMCD0**2ECT		
	MFMCD0**3ECT		
Motor cable (with brake)	MFMCA0**2FCD		A4-145
	MFMCA0**2FCT		
	MFMCA0**3FCT		
Brake cable	MFMCB0**0GET		A4-145
Regenerative resistor	50 Ω , 25W	DV0P4280	A4-153
	100 Ω , 25W	DV0P4281	
	25 Ω , 50W	DV0P4282	
	50 Ω , 50W	DV0P4283	
	30 Ω , 100W	DV0P4284	
	20 Ω , 130W	DV0P4285	
Reactor		DV0P220 to DV0P228	A4-152
Noise filter		DV0P4170	A4-138
		DV0P4180	
		DV0P4220	
		DV0P3410	
Surge absorber	Single phase 100V, 200V	DV0P4190	A4-139
	3-phase 200V	DV0P1450	
Noise filter for signal wire		DV0P1460	A4-139

Note) 1. □represents the motor structure.
Note) 2. ** represents the cable length (specified value)
For details, refer to cable specifications (A4-141).

Common Specifications of Driver

Basic specifications	Input power supply	100V-line	Main circuit power	Single phase, 100 – 115V +10% −15% 50/60Hz
			Control circuit power	Single phase, 100 – 115V +10% −15% 50/60Hz
		200V-line	Main circuit power: Type A, B	Single phase, 200 – 240V +10% −15% 50/60Hz
			Main circuit power: Type C, D	Single/3-phase, 200 – 240V +10% −15% 50/60Hz
			Main circuit power: Type E, F	3-phase, 200 – 230V +10% −15% 50/60Hz
			Control circuit power: Type A to D	Single phase, 200 – 240V +10% −15% 50/60Hz
			Control circuit power: Type E, F	Single phase, 200 – 230V +10% −15% 50/60Hz
	Operation conditions		Temperature	Operating : 0 to 55˚C, Storage : –20 to +65˚C (Max.temperature guarantee 80˚C for 72 hours <Nomal temperature>)
			Humidity	Operation/storage humidity 90%RH or less (no condensation)
			Height above the sea	Height above the sea level: 1000 m or less
			Vibration	5.88 m/s^2 or less, 10 to 60 Hz (Continuous operation at resonance point is not allowed)
	Withstand voltage			Should be 1500VAC (Sensed current: 20mA) or higher for 1 minute between Primary and Ground.
	Control method			IGBT PWM method, sinusoidal drive
	Control mode			Select Position control or Full-closed control by parameter.
	Encoder feedback			17-bit (131072 resolution) absolute/incremental encoder, 2500P/r (10000 resolution) incremental encoder
	Feedback scale			Made by Mitsutoyo ABS AT573A Series: Resolution(μm) 0.05, Max. Speed*(m/s) 2 ABS ST771A Series: 0.5, 5 ABS ST773A Series: 0.1, 4 ABS ST771AL Series: 0.5, 5 ABS ST773AL Series: 0.1, 4 * The maximum speed depends on the driver performance. It is limited by the machine configuration and system configuration.
	Control signal		Input (14 inputs)	CW over-travel inhibit, CCW over-travel inhibit, Home sensor, Emergency stop, Point specifying x6 Servo-ON, Strobe, Multi- function input x2
			Output (10 outputs)	Servo alarm, Brake release signal, Present position output x6, Positioning completion / Output during deceleration, Motor operation condition
	Pulse signal		Input (4 inputs)	Encoder pulse (A/B/Z-phase) or feedback scale pulse (EXA/EXB-phase)is output by the line driver. For encoder Z-phase pulse, an open collector output is also available.
	Setup			Setup with PANATERM or a console is available. (PANATERM and a console are sold separately)
	Front panel			[1] 7-segment LED 2-digit [2] Analogue monitor pin (velocity monitor and torque monitor)
	Regeneration			Type A, B : No internal regenerative resist (external only) Type C-F : internal regenerative resist (external is also available)
	Dynamic brake			Built in

Function	Damping Control			A function to reduce vibration by removing the vibration frequency component when the front end of the machine vibrates.
	Feedback scale division gradual increase setting range			Ratio between the encoder pulse (numerator) and the feedback scale pulse (denominator) can be set within the setting range : (1 to 10000 x $2^{(0-17)}$)/(1 to 10000)
	The number of points			maximum 60 points
	Operation mode	Homing operation		Eight types of homing operations [home sensor + Z phase (based on the front end), home sensor (based on the front end), home sensor + Z phase (based on the rear end), limit sensor + Z phase, limit sensor, Z phase homing, Bumping homing, and data set]
		Jog operation		The motor can be moved in a positive direction or negative direction independently. This is useful for teaching or adjustment.
		Step operation		The most basic operation. Specify a point number set in advance when performing the operation. The four types of modes [incremental operation, absolute operation, rotary axis operation and dwell timer (waiting time)]
		Block operation	Continuous block operation	Several step operations can be performed continuously. Once an operation starts, the operation continues to a specified point number.
			Combined block operation	A step operation is performed according to combined several point numbers. This is useful when you want to change the speed during a step operation.
		Sequential Operation		A point number increments by 1 automatically whenever an operation command is given. A step operation can be performed easily only by turning the STB signal on/off.
		Teaching (Console (option) is necessary)		You can operate the motor actually using this console, set a target position and execute some test operations.
	Auto tuning	Real time		Load inertia is determined at real time in the state of actual operation and gain corresponding to the rigidity is set automatically.
		Normal mode		Load inertia is determined by driving the equipment with operation command within the driver and gain corresponding to the rigidity is set automatically.
	Instantaneous speed observer			Available only for position control. A function to improve the speed detection accuracy, achieve the quick response and, at the same time, reduce the vibration at the stop by estimating the motor speed using a load model.
	Unnecessary wiring mask function			The following control input signal can be masked: CW over-travel inhibit, CCW over-travel inhibit, multi function input1 and 2 , point specifying input(P8-IN,P16-IN,P32-IN), Servo-ON
	Division function of encoder feedback pulse			The number of pulses can be set up arbitrarily. (at the maximum encoder pulse)
	Protection function	Hardware error		Overload, undervoltage, overspeed, overload, overheat, over current, encoder error, etc.
		Software error		Large positional deviation, Undefined data error , EEPROM error, etc.
	Alarm data trace back function			Traceable up to 14 alarm data including present alarm data.

Standard Wiring Example of Main Circuit

● Frame A, B

• In Case of Single Phase, 100V

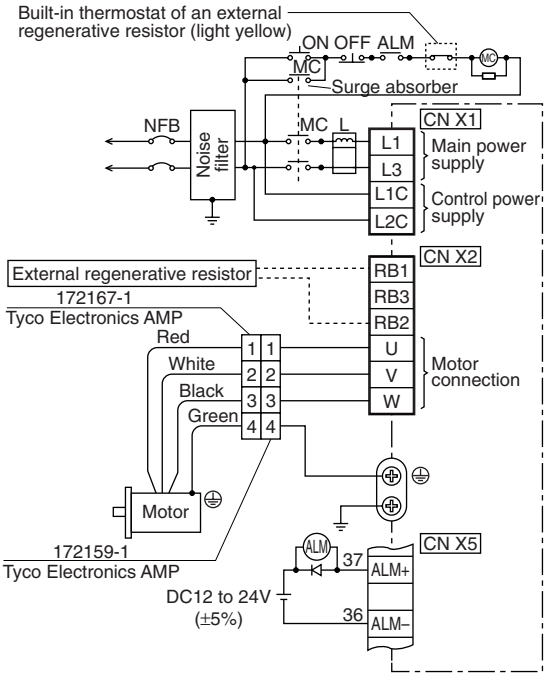

• In Case of Single Phase, 200V

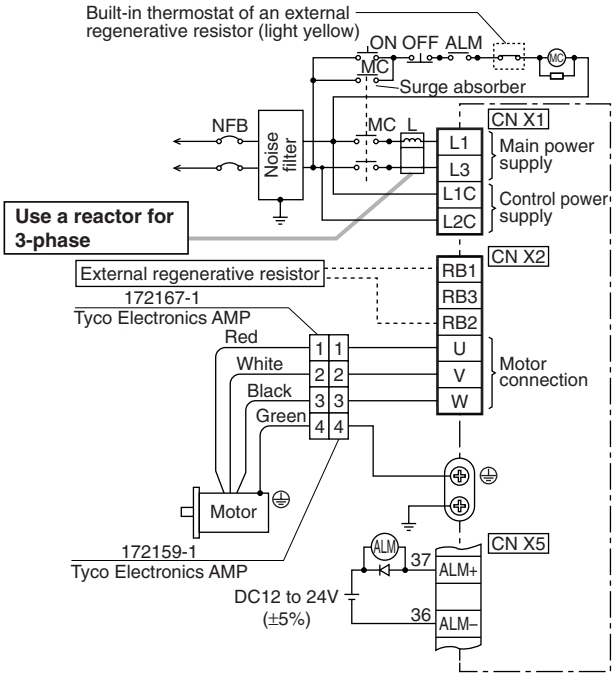

● Frame C, D

• In Case of Single Phase, 200V

<Remarks>
When you use single phase, connect the main power between L1 and L3 terminals.

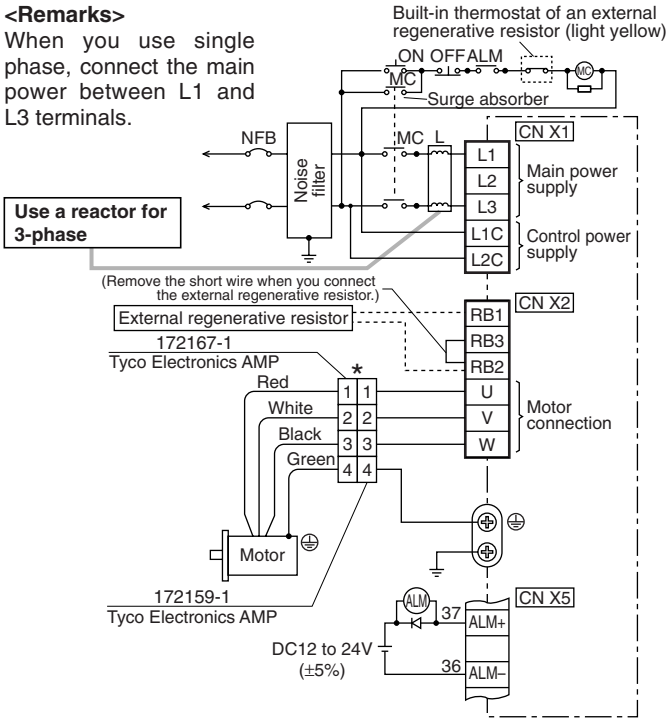

• In Case of 3-Phase, 200V

<Remarks>
When you use single phase, connect the main power between L1 and L3 terminals.

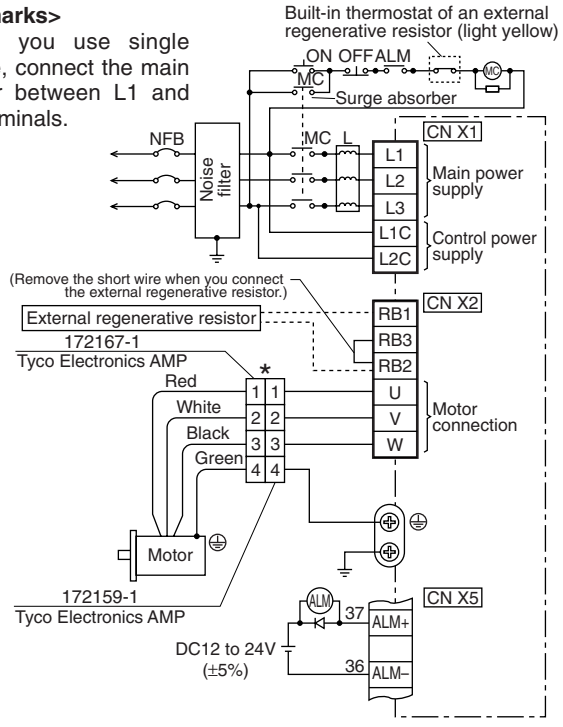

* When you use motor model of MSMA, MDMA, MFMA, MHMA and MGMA, use the connections as the right table shows..

[Motor portion]
Connector :
by Japan Aviation Electronics Ind.

<Remark>
Do not connect anything to NC.

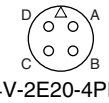

JL04V-2E20-4PE-B-R
JL04HV-2E22-22PE-B-R

PIN No.	Application
A	U-phase
B	V-phase
C	W-phase
D	Ground

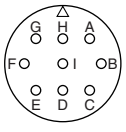

JL04V-2E20-18PE-B-R

PIN No.	Application
G	Brake
H	Brake
A	NC
F	U-phase
I	V-phase
B	W-phase
E	Ground
D	Ground
C	NC

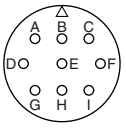

JL04V-2E24-11PE-B-R

PIN No.	Application
A	Brake
B	Brake
C	NC
D	U-phase
E	V-phase
F	W-phase
G	Ground
H	Ground
I	NC

● Frame E, F

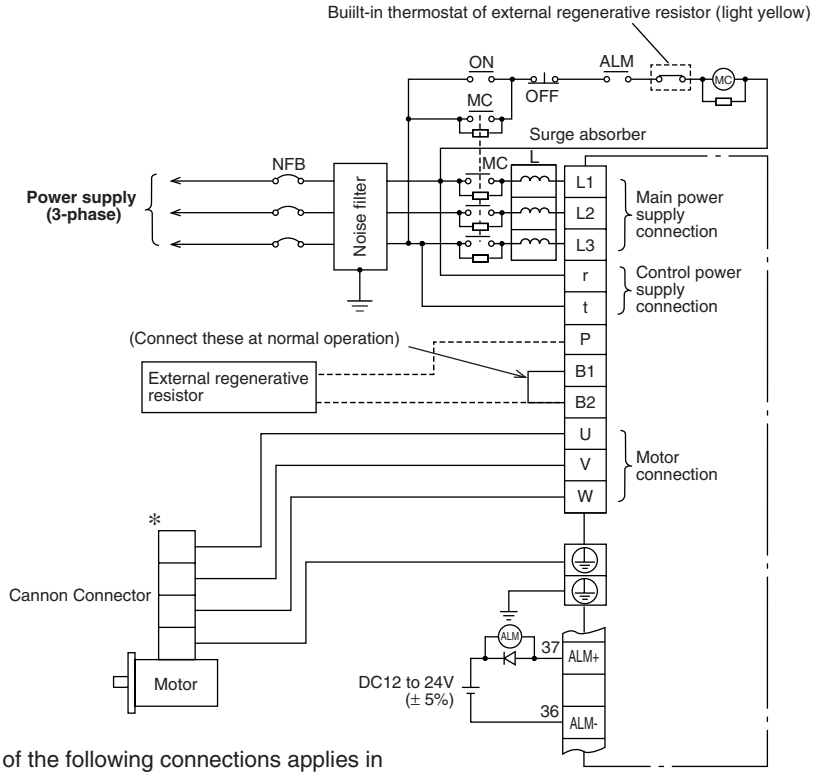

* One of the following connections applies in accordance with the series of motors. Refer to "Connector and Plug Specifications" on page A4-142.

[Motor portion]

JL04V-2E20-4PE-B-R
JL04HV-2E22-22PE-B-R

PIN No.	Application
A	U-phase
B	V-phase
C	W-phase
D	Ground

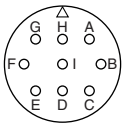

JL04V-2E20-18PE-B-R

PIN No.	Application
G	Brake
H	Brake
A	NC
F	U-phase
I	V-phase
B	W-phase
E	Ground
D	Ground
C	NC

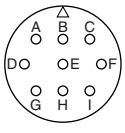

JL04V-2E24-11PE-B-R

PIN No.	Application
A	Brake
B	Brake
C	NC
D	U-phase
E	V-phase
F	W-phase
G	Ground
H	Ground
I	NC

<Remark> Do not connect anything to NC.

Encoder Wiring Diagram

● 2500P/r Incremental encoder

Motor MAMA, MSMD and MQMA series

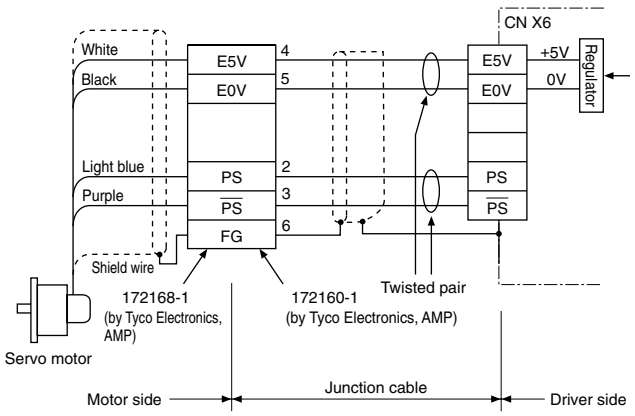

Motor MSMA, MDMA and MFMA, MGMA series

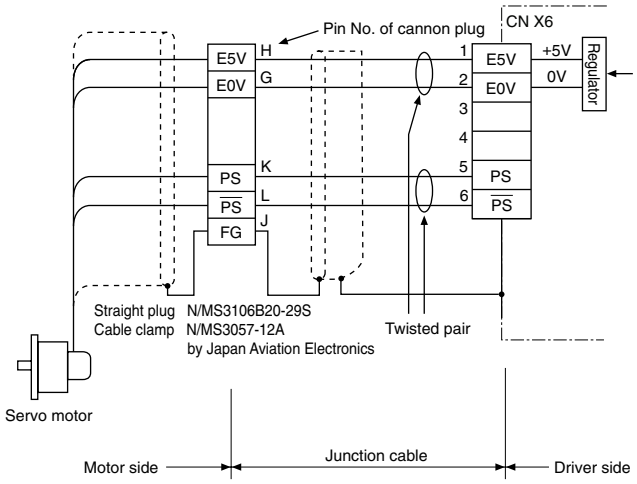

● 17bit Absolute/ Incremental common encoder

Motor MAMA, MSMD and MQMA series

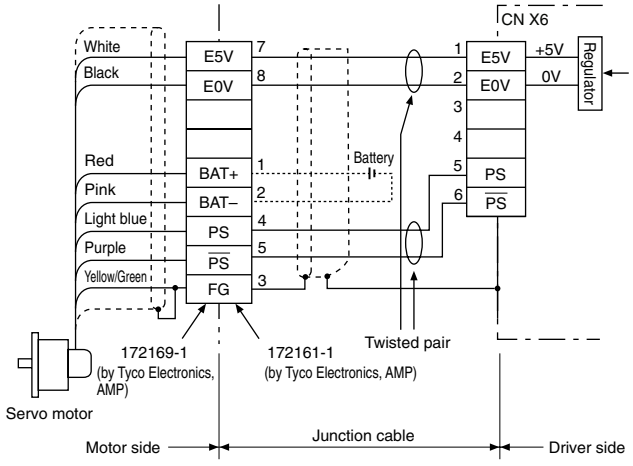

Motor MSMA, MDMA and MFMA, MGMA series

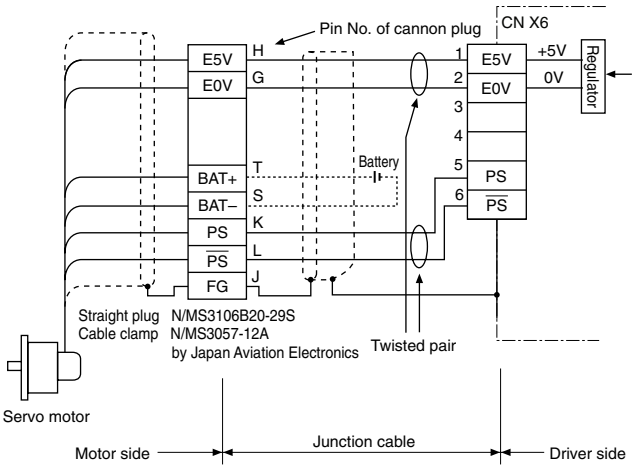

Standard Wiring Example of Control Circuit

● Wiring example at each control mode

● CN X5 Wiring example at torque control mode

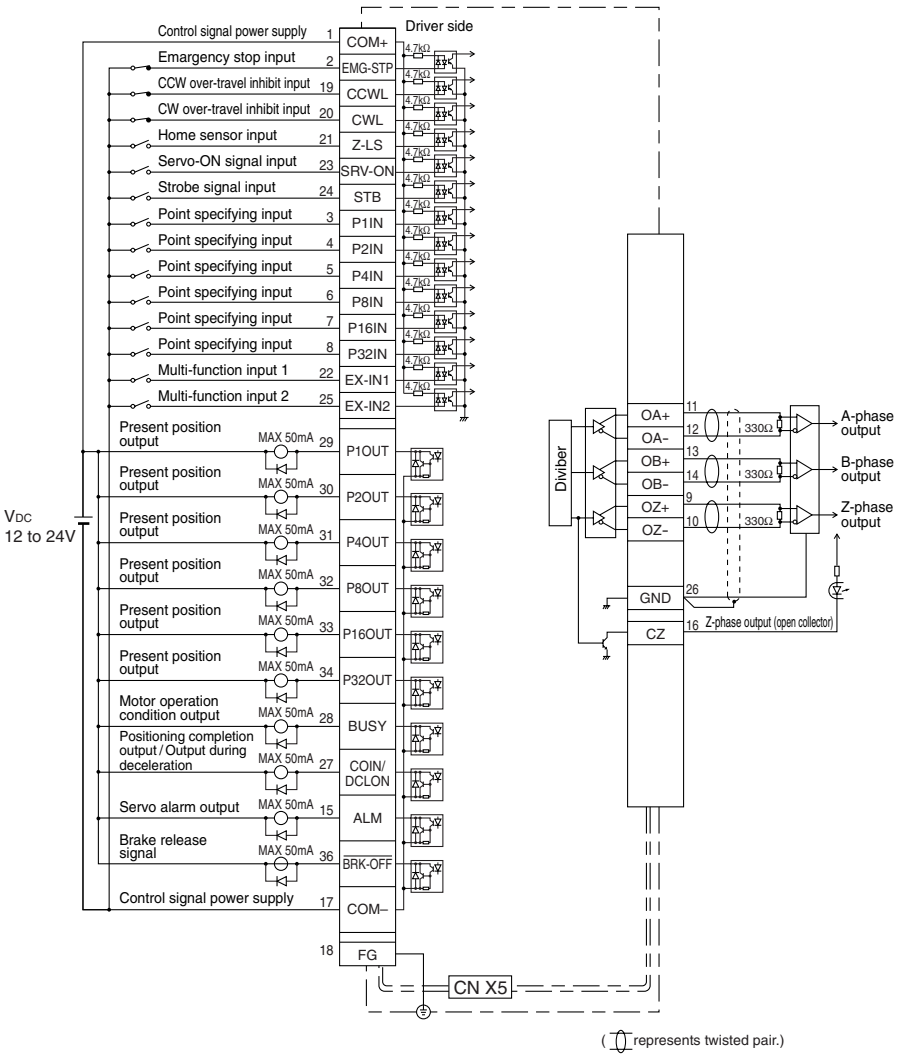

Table of Applicable Motors

Driver		Motor series							
Frame symbol	Part No.	MAMA	MSMD	MQMA	MSMA	MDMA	MGMA	MFMA	MHMA
A-frame	MADDT1105P		MSMD5AZ∗∗∗						
	MADDT1107P		MSMD011∗∗∗	MQMA011∗∗∗					
	MADDT1205P		MSMD5AZ∗∗∗ MSMD012∗∗∗	MQMA012∗∗∗					
	MADDT1207P	MAMA012∗∗∗	MSMD022∗∗∗	MQMA022∗∗∗					
B-frame	MBDDT2110P		MSMD021∗∗∗	MQMA021∗∗∗					
	MBDDT2210P	MAMA022∗∗∗	MSMD042∗∗∗	MQMA042∗∗∗					
C-frame	MCDDT3120P		MSMD041∗∗∗	MQMA041∗∗∗					
	MCDDT3520P	MAMA042∗∗∗	MSMD082∗∗∗					MFMA042∗∗∗	MHMA052∗∗∗
D-frame	MDDDT3530P					MDMA102∗∗∗			MHMA102∗∗∗
	MDDDT5540P	MAMA082∗∗∗			MSMA102∗∗∗ MSMA152∗∗∗	MDMA152∗∗∗	MGMA092∗∗∗	MFMA152∗∗∗	MHMA152∗∗∗
E-frame	MEDDT7364P				MSMA202∗∗∗	MDMA202∗∗∗		MFMA252∗∗∗	MHMA202∗∗∗
F-frame	MFDDTA390P				MSMA302∗∗∗	MDMA302∗∗∗	MGMA202∗∗∗		MHMA302∗∗∗
	MFDDTB3A2P				MSMA402∗∗∗ MSMA502∗∗∗	MDMA402∗∗∗ MDMA502∗∗∗	MGMA302∗∗∗ MGMA452∗∗∗	MFMA452∗∗∗	MHMA402∗∗∗ MHMA502∗∗∗

Refer to page, A4-65, Table of Part Numbers and Options as well.

Driver/Dimensions

Frame A

[unit: mm]

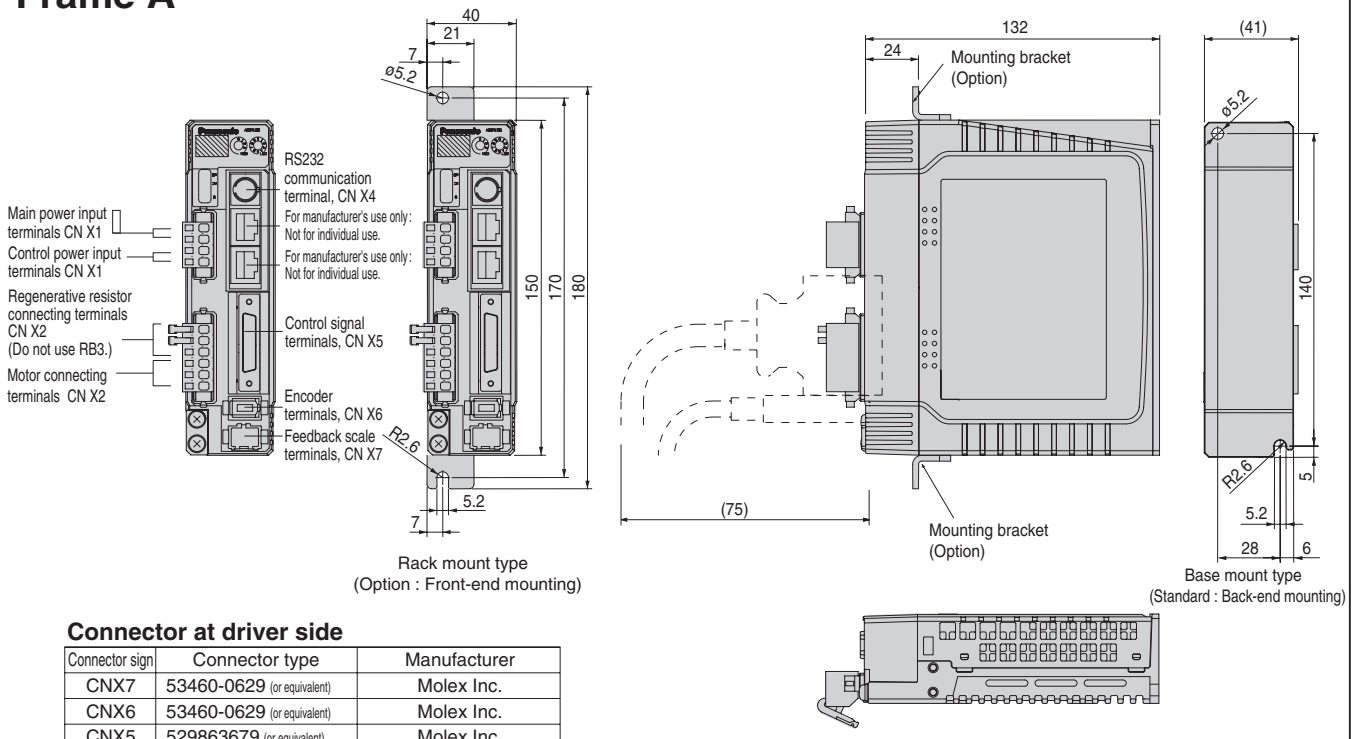

Connector at driver side

Connector sign	Connector type	Manufacturer
CNX7	53460-0629 (or equivalent)	Molex Inc.
CNX6	53460-0629 (or equivalent)	Molex Inc.
CNX5	529863679 (or equivalent)	Molex Inc.
CNX4	MD-S8000-10 (or equivalent)	J.S.T. Mfg.Co., Ltd.
CNX3B	855050013(or equivalent)	Molex Inc.
CNX3A	855050013(or equivalent)	Molex Inc.
CNX2	S06B-F32SK-GGXR(or equivalent)	J.S.T. Mfg.Co., Ltd.
CNX1	S04B-F32SK-GGXR(or equivalent)	J.S.T. Mfg.Co., Ltd.

Connector at Power Supply and Motor side

Connector sign	Connector type	Manufacturer
CNX2	06JFAT-SAXGF(or equivalent)	J.S.T. Mfg.Co., Ltd.
CNX1	04JFAT-SAXGF(or equivalent)	J.S.T. Mfg.Co., Ltd.

Mass 0.8kg

Frame B

[unit: mm]

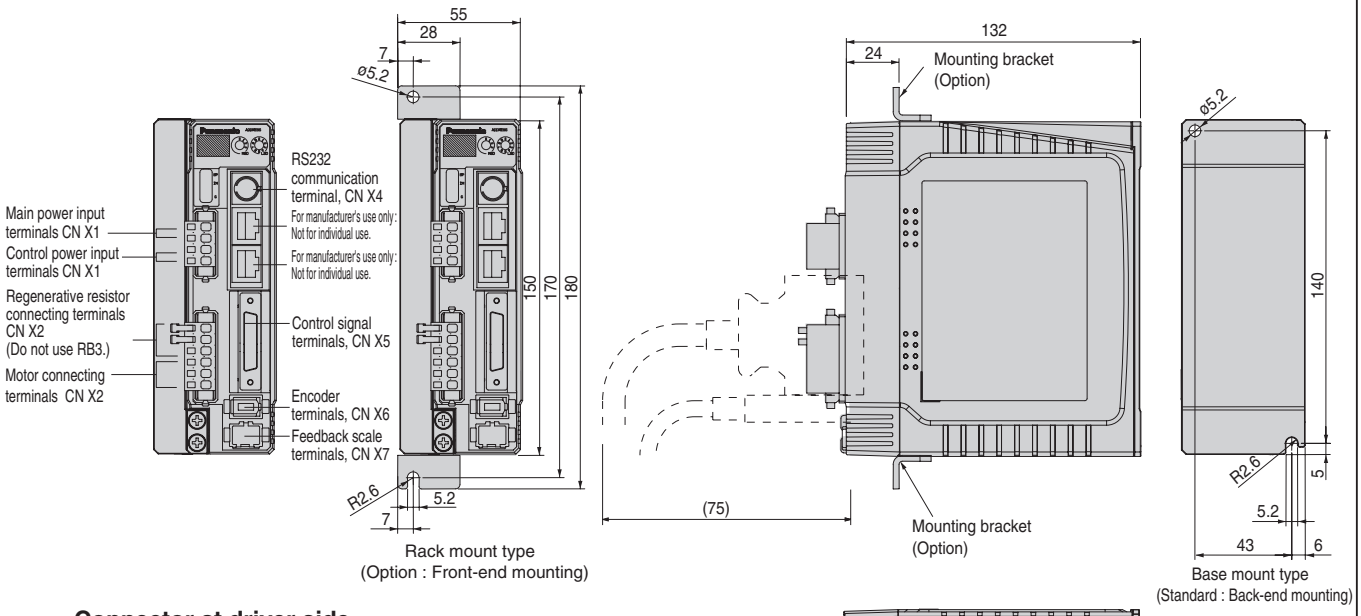

Connector at driver side

Connector sign	Connector type	Manufacturer
CNX7	53460-0629 (or equivalent)	Molex Inc.
CNX6	53460-0629 (or equivalent)	Molex Inc.
CNX5	529863679 (or equivalent)	Molex Inc.
CNX4	MD-S8000-10 (or equivalent)	J.S.T. Mfg.Co., Ltd.
CNX3B	855050013(or equivalent)	Molex Inc.
CNX3A	855050013(or equivalent)	Molex Inc.
CNX2	S06B-F32SK-GGXR(or equivalent)	J.S.T. Mfg.Co., Ltd.
CNX1	S04B-F32SK-GGXR(or equivalent)	J.S.T. Mfg.Co., Ltd.

Connector at Power Supply and Motor side

Connector sign	Connector type	Manufacturer
CNX2	06JFAT-SAXGF(or equivalent)	J.S.T. Mfg.Co., Ltd.
CNX1	04JFAT-SAXGF(or equivalent)	J.S.T. Mfg.Co., Ltd.

Mass 1.1kg

Frame C

[unit: mm]

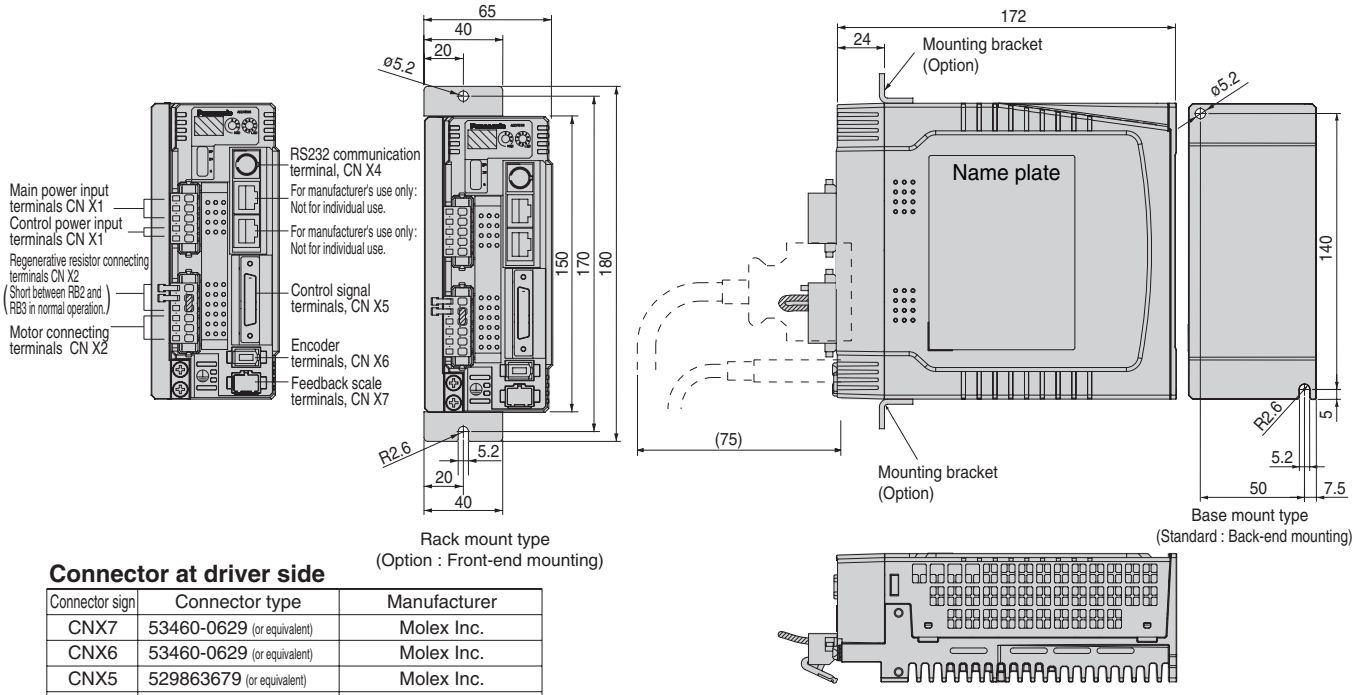

Connector at driver side

Connector sign	Connector type	Manufacturer
CNX7	53460-0629 (or equivalent)	Molex Inc.
CNX6	53460-0629 (or equivalent)	Molex Inc.
CNX5	529863679 (or equivalent)	Molex Inc.
CNX4	MD-S8000-10 (or equivalent)	J.S.T. Mfg.Co., Ltd.
CNX3B	855050013(or equivalent)	Molex Inc.
CNX3A	855050013(or equivalent)	Molex Inc.
CNX2	S06B-F32SK-GGXR(or equivalent)	J.S.T. Mfg.Co., Ltd.
CNX1	S05B-F32SK-GGXR(or equivalent)	J.S.T. Mfg.Co., Ltd.

Connector at Power Supply and Motor side

Connector sign	Connector type	Manufacturer
CNX2	06JFAT-SAXGF(or equivalent)	J.S.T. Mfg.Co., Ltd.
CNX1	05JFAT-SAXGF(or equivalent)	J.S.T. Mfg.Co., Ltd.

Mass 1.5kg

Frame D

[unit: mm]

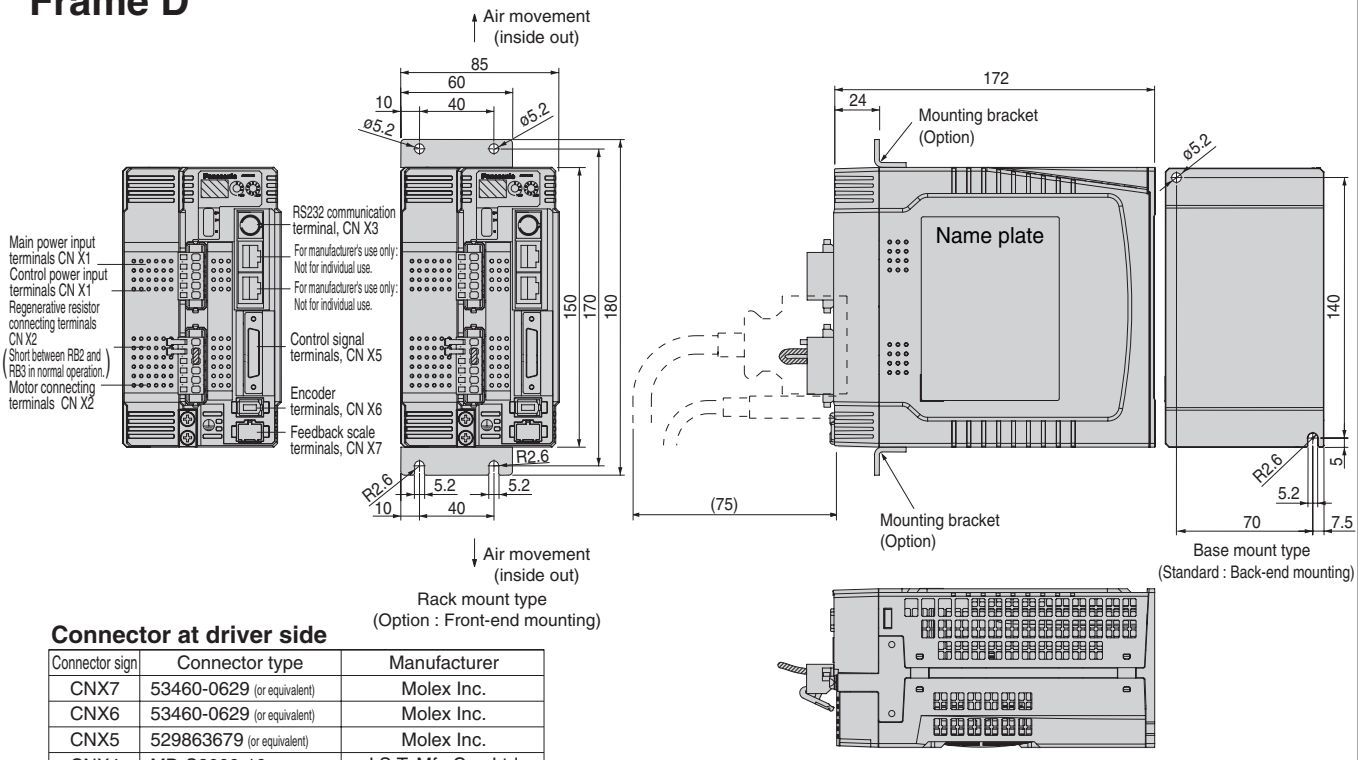

Connector at driver side

Connector sign	Connector type	Manufacturer
CNX7	53460-0629 (or equivalent)	Molex Inc.
CNX6	53460-0629 (or equivalent)	Molex Inc.
CNX5	529863679 (or equivalent)	Molex Inc.
CNX4	MD-S8000-10 (or equivalent)	J.S.T. Mfg.Co., Ltd.
CNX3B	855050013(or equivalent)	Molex Inc.
CNX3A	855050013(or equivalent)	Molex Inc.
CNX2	S06B-F32SK-GGXR(or equivalent)	J.S.T. Mfg.Co., Ltd.
CNX1	S05B-F32SK-GGXR(or equivalent)	J.S.T. Mfg.Co., Ltd.

Connector at Power Supply and Motor side

Connector sign	Connector type	Manufacturer
CNX2	06JFAT-SAXGF(or equivalent)	J.S.T. Mfg.Co., Ltd.
CNX1	05JFAT-SAXGF(or equivalent)	J.S.T. Mfg.Co., Ltd.

Mass 1.7kg

Driver/Dimensions

Frame E

[unit: mm]

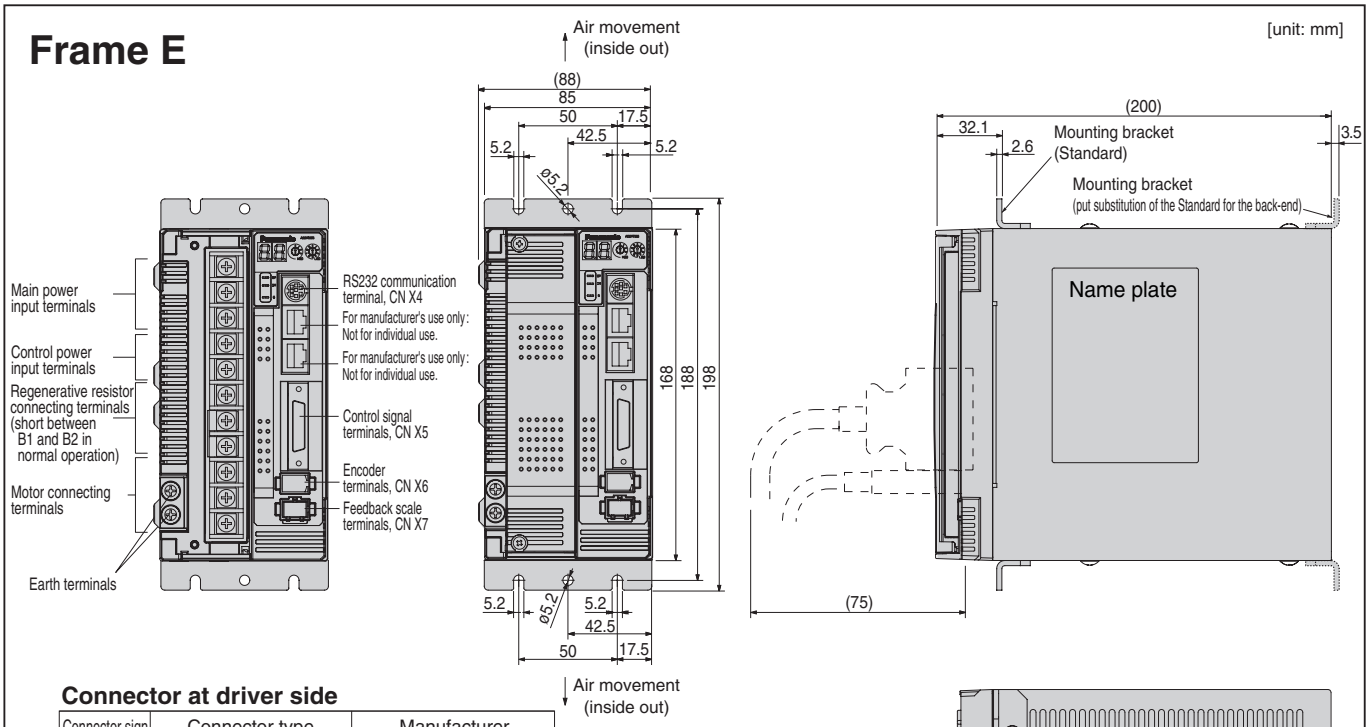

Connector at driver side

Connector sign	Connector type	Manufacturer
CNX7	53460-0629 (or equivalent)	Molex Inc.
CNX6	53460-0629 (or equivalent)	Molex Inc.
CNX5	529863679 (or equivalent)	Molex Inc.
CNX4	MD-S8000-10 (or equivalent)	J.S.T. Mfg.Co., Ltd.
CNX3B	855050013(or equivalent)	Molex Inc.
CNX3A	855050013(or equivalent)	Molex Inc.

Mass 3.2kg

Frame F

[unit: mm]

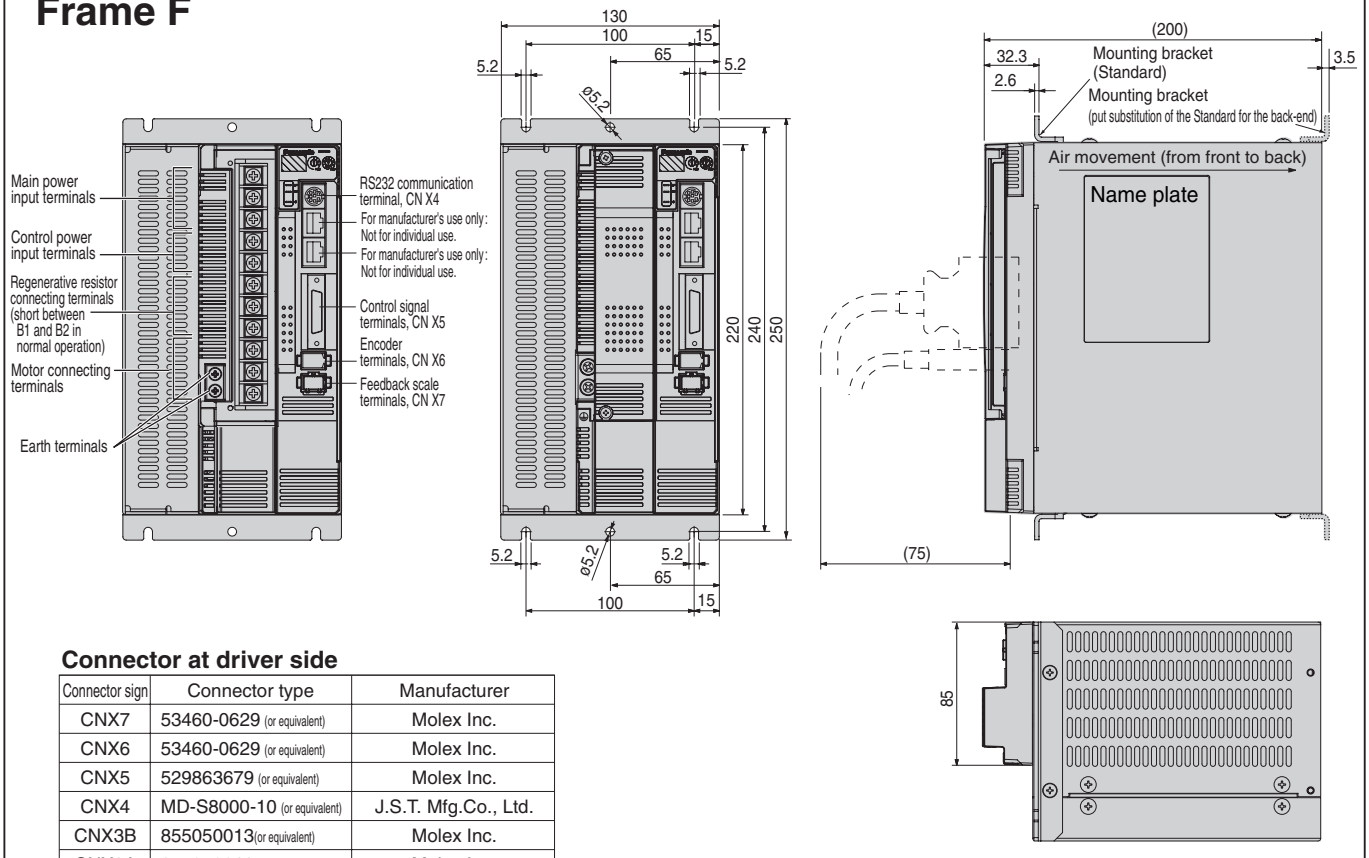

Connector at driver side

Connector sign	Connector type	Manufacturer
CNX7	53460-0629 (or equivalent)	Molex Inc.
CNX6	53460-0629 (or equivalent)	Molex Inc.
CNX5	529863679 (or equivalent)	Molex Inc.
CNX4	MD-S8000-10 (or equivalent)	J.S.T. Mfg.Co., Ltd.
CNX3B	855050013(or equivalent)	Molex Inc.
CNX3A	855050013(or equivalent)	Molex Inc.

Mass 6.0kg

Motor Specifications and Ratings 200V MAMA

100W to 750W Ultra low inertia Small capacity

			AC200V							
Motor model		MAMA	012P1□	012S1□	022P1□	022S1□	042P1□	042S1□	082P1□	082S1□
Applicable driver	Model No.	A4 series	MADDT1207		MBDDT2210		MCDDT3520		MDDDT5540	
		A4F series	MADDT1207F		MBDDT2210F		MCDDT3520F		MDDDT5540F	
		A4P series	MADDT1207P		MBDDT2210P		MCDDT3520P		MDDDT5540P	
	Frame symbol		Frame A		Frame B		Frame C		Frame D	
Power supply capacity (kVA)			0.3		0.5		0.9		1.6	
Rated output (W)			100		200		400		750	
Rated torque (N · m)			0.19		0.38		0.76		1.43	
Momentary Max. peak torque (N · m)			0.95		1.91		3.82		7.16	
Rated current (Arms)			0.9		1.54		3.1		5.1	
Max. current (Ao-p)			6.3		10.9		21.7		36.0	
Regenerative brake frequency (times/min) Note)1	Without option		No limit Note)2							
	DV0P4283		No limit Note)2						———	
	DV0P4284		———						No limit Note)2	
Rated rotational speed (r/min)			5000							
Max. rotational speed (r/min)			6000							
Moment of inertia of rotor ($\times 10^{-4}$ kg · m^2)	Without brake		0.025	0.035	0.078	0.088	0.14	0.15	0.50	0.51
	With brake		0.029	0.039	0.11	0.12	0.17	0.18	0.58	0.59
Recommended moment of inertia ratio of the load and the rotor Note)3			15 times or less							
Rotary encoder specifications			2500P/r Incremental	17-bit Absolute/ Incremental	2500P/r Incremental	17-bit Absolute/ Incremental	2500P/r Incremental	17-bit Absolute/ Incremental	2500P/r Incremental	17-bit Absolute/ Incremental
	Resolution per single turn		10000	131072	10000	131072	10000	131072	10000	131072
Protective enclosure rating			IP65 (except rotating portion of output shaft and lead wire end)							
Environment	Ambient temperature		0 to 40˚C (free from freezing), Storage : –20 to +65˚C (Max.temperature guarantee 80˚C for 72 hours <Nomal temperature>)							
	Ambient humidity		85%RH or lower (free from condensing)							
	Installation location		Indoors (no direct sunlight), free from corrosive gas, inflammable gas, oil mist and dust							
	Altitude		1000m or lower							
	Vibration resistance		49m/s^2 or less	24m/s^2 or less	49m/s^2 or less	24m/s^2 or less	49m/s^2 or less	24m/s^2 or less	49m/s^2 or less	24m/s^2 or less
Mass (kg), ( ) represents holding brake type			0.65 (0.85)	0.71 (0.91)	1.1 (1.5)	1.2 (1.6)	1.5 (1.9)	1.6 (2.0)	3.3 (4.0)	3.4 (4.1)

Brake specifications (This brake will be released when it is energized. Do not use this for braking the motor in motion.)			
Static friction torque (N · m)	0.29	1.27	2.45
Engaging time (ms)	35	50	70
Releasing time (ms) Note)4	10 (60)	10 (100)	20 (–)
Exciting current (DC) (A)	0.25	0.30	0.35
Releasing voltage	DC2V or more		
Exciting voltage	DC 24 V ±5%		

Permissible load				
During assembly	Radial load P-direction (N)	147	392	686
	Thrust load A-direction (N)	88	147	294
	Thrust load B-direction (N)	117.6	196	392
During operation	Radial load P-direction (N)	68.6	245	392
	Thrust load A-direction (N)	49	68.6	68.6
	Thrust load B-direction (N)	49	68.6	68.6

For motor dimensions, refer to page A4-115, and for the diver, refer to pages A4-22, 23, 48, 49, 73 and 74.

Model designation MAMA series, 100W to 750W

e.g.) M A M A 0 1 2 S 1 A

Symbol	Type
MAMA	Ultra low inertia (100W-750W)

Voltage specifications

Symbol	Specifications
2	200V

Design order
1 : Standard

Motor structure

Symbol	Shaft		Holding brake		Oil seal	
	Round	Key-way	without	with	without	with
A	●		●		●	
B	●			●	●	
E		●	●		●	
F		●		●	●	

Motor rated output

Symbol	Rated output
01	100W
02	200W
04	400W
08	750W

Rotary encoder specifications

Symbol	Format	Pulse counts	Resolution	Wires
P	Incremental	2500P/r	10000	5
S	Absolute/Incremental	17-bit	131072	7

Torque characteristics at AC200V of power voltage

MAMA012□1□

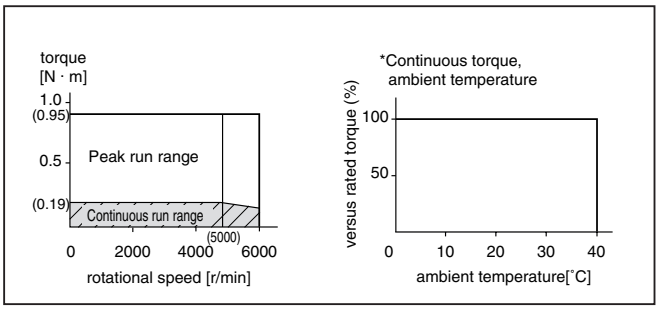

MAMA022□1□

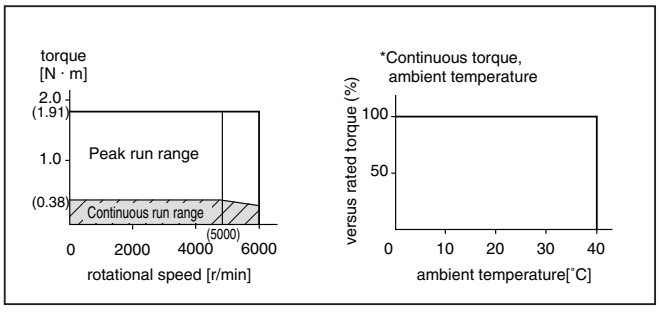

MAMA042□1□

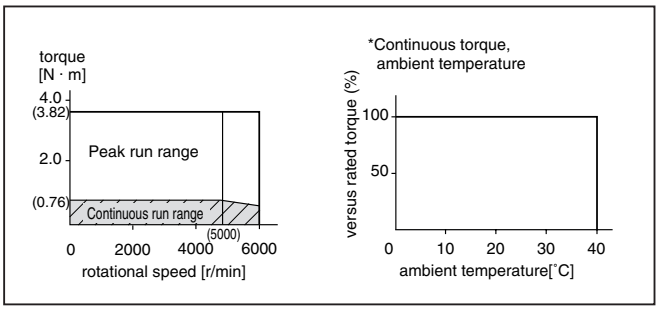

MAMA082□1□

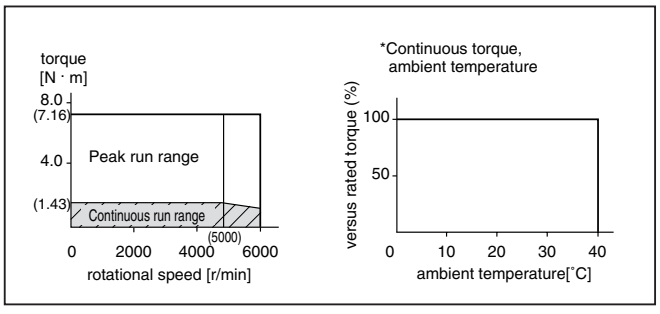

*When you lower the torque limit setup (Pr5E and 5F), running range at high speed might be lowered as well.

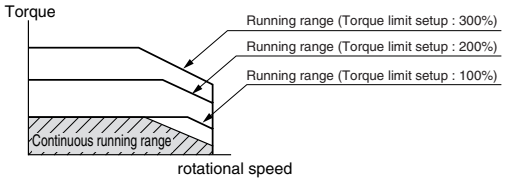

Radial load (P) direction

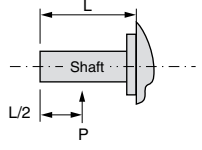

Thrust load (A, B) direction

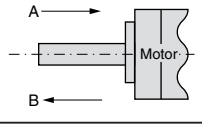

Note) 1. Regenerative brake frequency represents the frequency of the motor's stops from the rated speed with deceleration without load.
- If the load is connected, frequency will be defines as 1/(m+1), where m=load moment of inertia/rotor moment of inertia.
- When the motor speed exceeds the rated speed, regenerative brake frequency is in inverse proportion to the square of (running speed/rated speed).
- Power supply voltage is AC230V (at 200V of the main voltage). If the supply voltage fluctuates, frequency is in inverse proportion to the square of (Running supply voltage/230) relative to the value in the table.
- When regeneration occurs continuously such cases as running speed frequently changes or vertical feeding, consult us or a dealer.

2. If the effective torque is within the rated torque, there is no limit in generative brake.
3. Consult us or a dealer if the load moment of inertia exceeds the specified value.
4. Specified releasing time is obtained with the use of surge absorber for brake (Z15D151 by Ishizuka Electronic or equivalent). ( ) represents the actually measured value using a diode (200V, 1A or equivalent)

Motor Specifications and Ratings 100V MSMD

50W to 100W Low inertia Small Capacity

			AC100V			
Motor model		MSMD	5AZP1□	5AZS1□	011P1□	011S1□
Applicable driver	Model No.	A4 series	MADDT1105		MADDT1107	
		A4F series	MADDT1105F		MADDT1107F	
		A4P series	MADDT1105P		MADDT1107P	
	Frame symbol		Frame A			
Power supply capacity (kVA)			0.5		0.4	
Rated output (W)			50		100	
Rated torque (N · m)			0.16		0.32	
Momentary Max. peak torque (N · m)			0.48		0.95	
Rated current (Arms)			1.1		1.7	
Max. current (Ao-p)			4.7		7.2	
Regenerative brake frequency (times/min) Note)1	Without option		No limit Note)2			
	DV0P4280		No limit Note)2			
Rated rotational speed (r/min)			3000			
Max. rotational speed (r/min)			5000			
Moment of inertia of rotor ($\times 10^{-4}$ kg · m^2)	Without brake		0.025		0.051	
	With brake		0.027		0.054	
Recommended moment of inertia ratio of the load and the rotor Note)3			30 times or less			
Rotary encoder specifications			2500P/r Incremental	17-bit Absolute/ Incremental	2500P/r Incremental	17-bit Absolute/ Incremental
	Resolution per single turn		10000	131072	10000	131072
Protective enclosure rating			IP65 (except rotating portion of output shaft and lead wire end)			
Environment	Ambient temperature		0 to 40˚C (free from freezing), Storage : –20 to +65˚C (Max.temperature guarantee 80˚C for 72 hours <Nomal temperature>)			
	Ambient humidity		85%RH or lower (free from condensing)			
	Installation location		Indoors (no direct sunlight), free from corrosive gas, inflammable gas, oil mist and dust			
	Altitude		1000m or lower			
	Vibration resistance		49m/s^2 or less		49m/s^2 or less	
Mass (kg), ( ) represents holding brake type			0.32 (0.53)		0.47 (0.68)	

Brake specifications (This brake will be released when it is energized. Do not use this for braking the motor in motion.)	
Static friction torque (N . m)	0.29
Engaging time (ms)	35
Releasing time (ms) Note)4	20 (–)
Exciting current (DC) (A)	0.30
Releasing voltage	DC1V or more
Exciting voltage	DC 24 V ±5%

Permissible load		
During assembly	Radial load P-direction (N)	147
	Thrust load A-direction (N)	88
	Thrust load B-direction (N)	117
During operation	Radial load P-direction (N)	68
	Thrust load A-direction (N)	58
	Thrust load B-direction (N)	58

For motor dimensions, refer to page A4-116, and for the diver, refer to pages A4-22, 48 and 73.

Model designation MSMD series, 50W to 100W

e.g.) M S M D 5 A Z S 1 S

Symbol	Type
MSMD	Low inertia (50W-100W)

Voltage specifications

Symbol	Specifications
1	100V
Z	100/200V (50W only)

Design order
1 : Standard

Motor structure

Symbol	Shaft		Holding brake		Oil seal	
	Round	Key-way, center tap	without	with	without	with*
A	●		●		●	
B	●			●	●	
S		●	●		●	
T		●		●	●	

*Motor with oil seal is manufactured by order.

Motor rated output

Symbol	Rated output
5A	50W
01	100W

Rotary encoder specifications

Symbol	Format	Pulse counts	Resolution	Wires
P	Incremental	2500P/r	10000	5
S	Absolute/Incremental	17-bit	131072	7

Torque characteristics at AC100V of power voltage

(Dotted line represents the torque at 10% less supply voltage.)

MSMD5AZ□1□

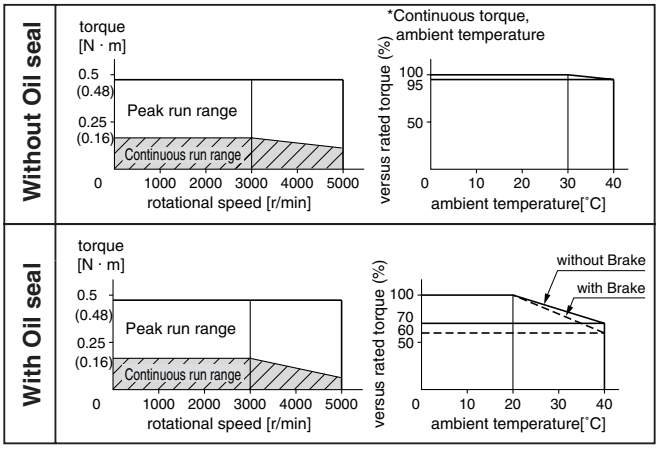

MSMD011□1□

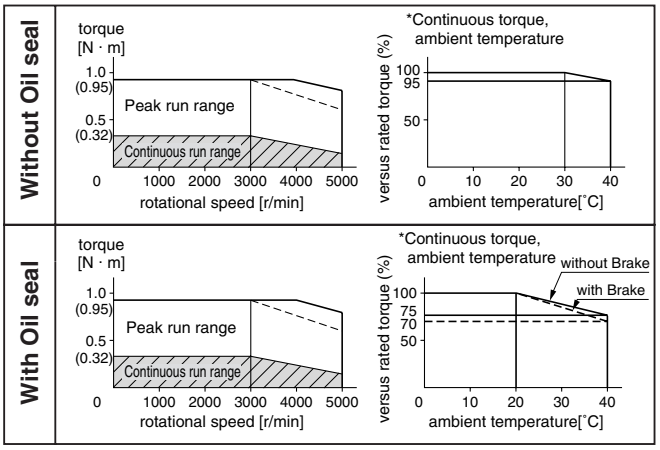

*When you lower the torque limit setup (Pr5E and 5F), running range at high speed might be lowered as well.

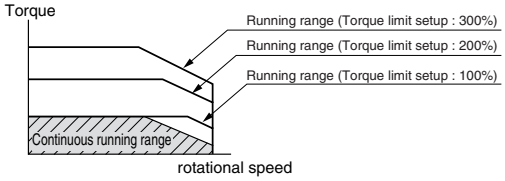

Radial load (P) direction

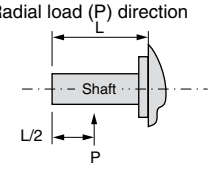

Thrust load (A, B) direction

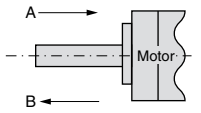

Note) 1. Regenerative brake frequency represents the frequency of the motor's stops from the rated speed with deceleration without load.
- If the load is connected, frequency will be defines as 1/(m+1), where m=load moment of inertia/rotor moment of inertia.
- When the motor speed exceeds the rated speed, regenerative brake frequency is in inverse proportion to the square of (running speed/rated speed).
- Power supply voltage is AC115V (at 100V of the main voltage). If the supply voltage fluctuates, frequency is in inverse proportion to the square of (Running supply voltage/115) relative to the value in the table.
- When regeneration occurs continuously such cases as running speed frequently changes or vertical feeding, consult us or a dealer.

2. If the effective torque is within the rated torque, there is no limit in generative brake.
3. Consult us or a dealer if the load moment of inertia exceeds the specified value.
4. Specified releasing time is obtained with the use of surge absorber for brake (Z15D271 by Ishizuka Electronic or equivalent). ( ) represents the actually measured value using a diode (200V, 1A or equivalent)

Motor Specifications and Ratings 100V MSMD

200W to 400W Low inertia Small Capacity

			AC100V			
Motor model		MSMD	021P1□	021S1□	041P1□	041S1□
Applicable driver	Model No.	A4 series	MBDDT2110		MCDDT3120	
		A4F series	MBDDT2110F		MCDDT3120F	
		A4P series	MBDDT2110P		MCDDT3120P	
	Frame symbol		Frame B		Frame C	
Power supply capacity (kVA)			0.5		0.9	
Rated output (W)			200		400	
Rated torque (N · m)			0.64		1.3	
Momentary Max. peak torque (N · m)			1.91		3.8	
Rated current (Arms)			2.5		4.6	
Max. current (Ao-p)			10.6		19.5	
Regenerative brake frequency (times/min) Note)1	Without option		No limit Note)2			
	DV0P4282		—		No limit Note)2	
	DV0P4283		No limit Note)2		—	
Rated rotational speed (r/min)			3000			
Max. rotational speed (r/min)			5000			
Moment of inertia of rotor ($\times 10^{-4}$ kg · m^2)	Without brake		0.14		0.26	
	With brake		0.16		0.28	
Recommended moment of inertia ratio of the load and the rotor Note)3			30 times or less			
Rotary encoder specifications			2500P/r Incremental	17-bit Absolute/ Incremental	2500P/r Incremental	17-bit Absolute/ Incremental
	Resolution per single turn		10000	131072	10000	131072
Protective enclosure rating			IP65 (except rotating portion of output shaft and lead wire end)			
Environment	Ambient temperature		0 to 40˚C (free from freezing), Storage : –20 to +65˚C (Max.temperature guarantee 80˚C for 72 hours <Nomal temperature>)			
	Ambient humidity		85%RH or lower (free from condensing)			
	Installation location		Indoors (no direct sunlight), free from corrosive gas, inflammable gas, oil mist and dust			
	Altitude		1000m or lower			
	Vibration resistance		49m/s^2 or less			
Mass (kg), ( ) represents holding brake type			0.82 (1.3)		1.2 (1.7)	

Brake specifications (This brake will be released when it is energized. Do not use this for braking the motor in motion.)	
Static friction torque (N . m)	1.27
Engaging time (ms)	50
Releasing time (ms) Note)4	15 (–)
Exciting current (DC) (A)	0.36
Releasing voltage	DC1V or more
Exciting voltage	DC 24 V ±5%

Permissible load		
During assembly	Radial load P-direction (N)	392
	Thrust load A-direction (N)	147
	Thrust load B-direction (N)	196
During operation	Radial load P-direction (N)	245
	Thrust load A-direction (N)	98
	Thrust load B-direction (N)	98

For motor dimensions, refer to page A4-117, and for the diver, refer to pages A4-22, 23, 48, 49, 73 and 74.

Model designation MSMD series, 200W to 400W

e.g.) M S M D 0 2 1 S 1 S

Symbol	Type
MSMD	Low inertia (200W-400W)

Voltage specifications

Symbol	Specifications
1	100V

Design order
1 : Standard

Motor structure

Symbol	Shaft		Holding brake		Oil seal	
	Round	Key-way, center tap	without	with	without	with*
A	●		●		●	
B	●			●	●	
S		●	●		●	
T		●		●	●	

*Motor with oil seal is manufactured by order.

Motor rated output

Symbol	Rated output
02	200W
04	400W

Rotary encoder specifications

Symbol	Format	Pulse counts	Resolution	Wires
P	Incremental	2500P/r	10000	5
S	Absolute/Incremental	17-bit	131072	7

Torque characteristics at AC100V of power voltage

(Dotted line represents the torque at 10% less supply voltage.)

MSMD021□1□

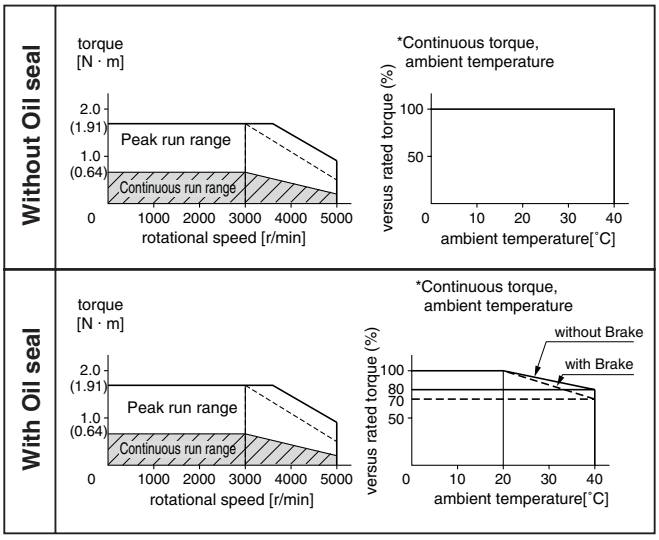

MSMD041□1□

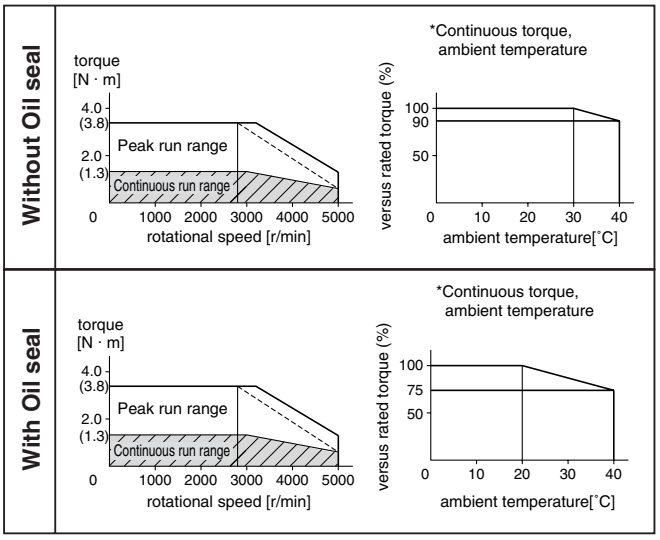

*When you lower the torque limit setup (Pr5E and 5F), running range at high speed might be lowered as well.

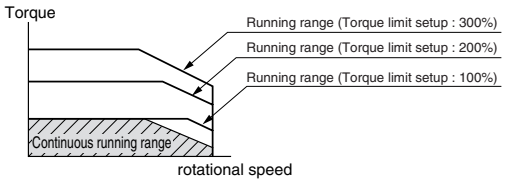

Radial load (P) direction

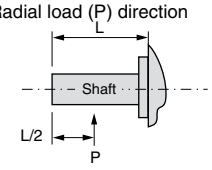

Thrust load (A, B) direction

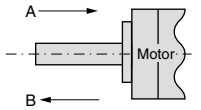

Note) 1. Regenerative brake frequency represents the frequency of the motor's stops from the rated speed with deceleration without load.
- If the load is connected, frequency will be defines as 1/(m+1), where m=load moment of inertia/rotor moment of inertia.
- When the motor speed exceeds the rated speed, regenerative brake frequency is in inverse proportion to the square of (running speed/rated speed).
- Power supply voltage is AC115V (at 100V of the main voltage). If the supply voltage fluctuates, frequency is in inverse proportion to the square of (Running supply voltage/115) relative to the value in the table.
- When regeneration occurs continuously such cases as running speed frequently changes or vertical feeding, consult us or a dealer.

2. If the effective torque is within the rated torque, there is no limit in generative brake.
3. Consult us or a dealer if the load moment of inertia exceeds the specified value.
4. Specified releasing time is obtained with the use of surge absorber for brake (Z15D271 by Ishizuka Electronic or equivalent). ( ) represents the actually measured value using a diode (200V, 1A or equivalent)

Motor Specifications and Ratings 200V MSMD

50W to 100W Low inertia Small Capacity

			AC200V			
Motor model		MSMD	5AZP1□	5AZS1□	012P1□	012S1□
Applicable driver	Model No.	A4 series	MADDT1205			
		A4F series	MADDT1205F			
		A4P series	MADDT1205P			
	Frame symbol		Frame A			
Power supply capacity (kVA)			0.5		0.5	
Rated output (W)			50		100	
Rated torque (N · m)			0.16		0.32	
Momentary Max. peak torque (N · m)			0.48		0.95	
Rated current (Arms)			1.1			
Max. current (Ao-p)			4.7			
Regenerative brake frequency (times/min) Note)1	Without option		No limit Note)2			
	DV0P4281		No limit Note)2			
Rated rotational speed (r/min)			3000			
Max. rotational speed (r/min)			5000			
Moment of inertia of rotor ($x10^{-4}$ kg · m^2)	Without brake		0.025		0.051	
	With brake		0.027		0.054	
Recommended moment of inertia ratio of the load and the rotor Note)3			30 times or less			
Rotary encoder specifications			2500P/r Incremental	17-bit Absolute/ Incremental	2500P/r Incremental	17-bit Absolute/ Incremental
	Resolution per single turn		10000	131072	10000	131072
Protective enclosure rating			IP65 (except rotating portion of output shaft and lead wire end)			
Environment	Ambient temperature		0 to 40˚C (free from freezing), Storage : –20 to +65˚C (Max.temperature guarantee 80˚C for 72 hours <Nomal temperature>)			
	Ambient humidity		85%RH or lower (free from condensing)			
	Installation location		Indoors (no direct sunlight), free from corrosive gas, inflammable gas, oil mist and dust			
	Altitude		1000m or lower			
	Vibration resistance		49m/s^2 or less		49m/s^2 or less	
Mass (kg), ( ) represents holding brake type			0.32(0.53)		0.47(0.68)	

Brake specifications (This brake will be released when it is energized. Do not use this for braking the motor in motion.)	
Static friction torque (N . m)	0.29
Engaging time (ms)	35
Releasing time (ms) Note)4	20 (–)
Exciting current (DC) (A)	0.30
Releasing voltage	DC1V or more
Exciting voltage	DC 24 V ±5%

Permissible load		
During assembly	Radial load P-direction (N)	147
	Thrust load A-direction (N)	88
	Thrust load B-direction (N)	117
During operation	Radial load P-direction (N)	68
	Thrust load A-direction (N)	58
	Thrust load B-direction (N)	58

For motor dimensions, refer to page A4-116, and for the diver, refer to pages A4-22, 48 and 73.

Model designation MSMD series, 50W to 100W

e.g.) M S M D 5 A Z S 1 S

Symbol	Type
MSMD	Low inertia (50W-100W)

Voltage specifications

Symbol	Specifications
2	200V
Z	100/200V (50W only)

Design order
1 : Standard

Motor structure

Symbol	Shaft		Holding brake		Oil seal	
	Round	Key-way, center tap	without	with	without	with*
A	●		●		●	
B	●			●	●	
S		●	●		●	
T		●		●	●	

*Motor with oil seal is manufactured by order.

Motor rated output

Symbol	Rated output
5A	50W
01	100W

Rotary encoder specifications

Symbol	Format	Pulse counts	Resolution	Wires
P	Incremental	2500P/r	10000	5
S	Absolute/Incremental	17-bit	131072	7

Torque characteristics at AC200V of power voltage

(Dotted line represents the torque at 10% less supply voltage.)

MSMD5AZ□1□

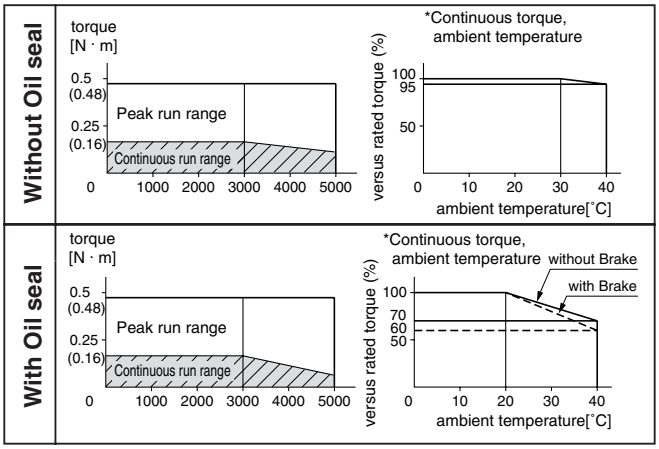

MSMD012□1□

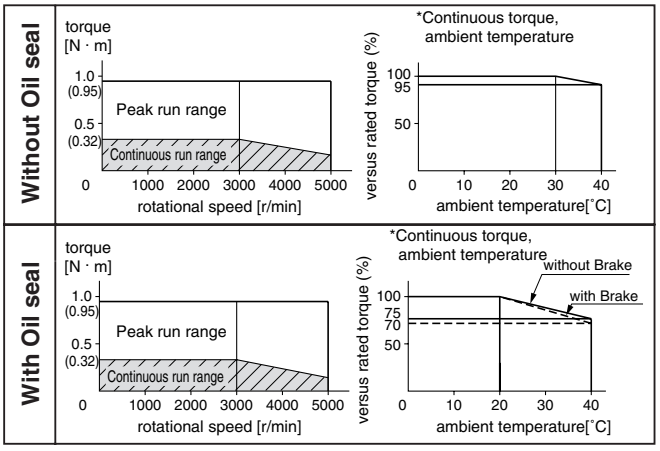

*When you lower the torque limit setup (Pr5E and 5F), running range at high speed might be lowered as well.

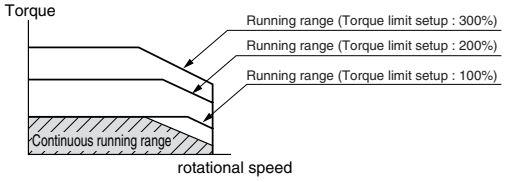

Radial load (P) direction

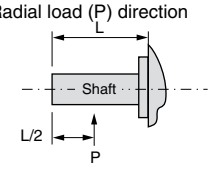

Thrust load (A, B) direction

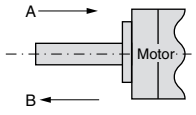

Note) 1. Regenerative brake frequency represents the frequency of the motor's stops from the rated speed with deceleration without load.
- If the load is connected, frequency will be defines as 1/(m+1), where m=load moment of inertia/rotor moment of inertia.
- When the motor speed exceeds the rated speed, regenerative brake frequency is in inverse proportion to the square of (running speed/rated speed).
- Power supply voltage is AC230V (at 200V of the main voltage). If the supply voltage fluctuates, frequency is in inverse proportion to the square of (Running supply voltage/230) relative to the value in the table.
- When regeneration occurs continuously such cases as running speed frequently changes or vertical feeding, consult us or a dealer.

2. If the effective torque is within the rated torque, there is no limit in generative brake.
3. Consult us or a dealer if the load moment of inertia exceeds the specified value.
4. Specified releasing time is obtained with the use of surge absorber for brake (Z15D271 by Ishizuka Electronic or equivalent). ( ) represents the actually measured value using a diode (200V, 1A or equivalent)

Motor Specifications and Ratings 200V MSMD

200W to 750W Low inertia Small Capacity

			AC200V					
Motor model		MSMD	022P1□	022S1□	042P1□	042S1□	082P1□	082S1□
Applicable driver	Model No.	A4 series	MADDT1207		MBDDT2210		MCDDT3520	
		A4F series	MADDT1207F		MBDDT2210F		MCDDT3520F	
		A4P series	MADDT1207P		MBDDT2210P		MCDDT3520P	
	Frame symbol		Frame A		Frame B		Frame C	
Power supply capacity (kVA)			0.5		0.9		1.3	
Rated output (W)			200		400		750	
Rated torque (N · m)			0.64		1.3		2.4	
Momentary Max. peak torque (N · m)			1.91		3.8		7.1	
Rated current (Arms)			1.6		2.6		4.0	
Max. current (Ao-p)			6.9		11.0		17.0	
Regenerative brake frequency (times/min) Note)1	Without option		No limit Note)2					
	DV0P4283		No limit Note)2					
Rated rotational speed (r/min)			3000					
Max. rotational speed (r/min)			5000				4500	
Moment of inertia of rotor ($\times 10^{-4}$ kg · m^2)	Without brake		0.14		0.26		0.87	
	With brake		0.16		0.28		0.97	
Recommended moment of inertia ratio of the load and the rotor Note)3			30 times or less				20 times or less	
Rotary encoder specifications			2500P/r Incremental	17-bit Absolute/ Incremental	2500P/r Incremental	17-bit Absolute/ Incremental	2500P/r Incremental	17-bit Absolute/ Incremental
	Resolution per single turn		10000	131072	10000	131072	10000	131072
Protective enclosure rating			IP65 (except rotating portion of output shaft and lead wire end)					
Environment	Ambient temperature		0 to 40˚C (free from freezing), Storage : –20 to +65˚C (Max.temperature guarantee 80˚C for 72 hours <Nomal temperature>)					
	Ambient humidity		85%RH or lower (free from condensing)					
	Installation location		Indoors (no direct sunlight), free from corrosive gas, inflammable gas, oil mist and dust					
	Altitude		1000m or lower					
	Vibration resistance		49m/s^2 or less					
Mass (kg), ( ) represents holding brake type			0.82 (1.3)		1.2 (1.7)		2.3 (3.1)	

Brake specifications (This brake will be released when it is energized. Do not use this for braking the motor in motion.)		
Static friction torque (N · m)	1.27	2.45
Engaging time (ms)	50	70
Releasing time (ms) Note)4	15 (–)	20 (–)
Exciting current (DC) (A)	0.36	0.42
Releasing voltage	DC1V or more	
Exciting voltage	DC 24 V ±5%	

Permissible load			
During assembly	Radial load P-direction (N)	392	686
	Thrust load A-direction (N)	147	294
	Thrust load B-direction (N)	196	392
During operation	Radial load P-direction (N)	245	392
	Thrust load A-direction (N)	98	147
	Thrust load B-direction (N)	98	147

For motor dimensions, refer to page A4-117, and for the diver, refer to pages A4-22, 23, 48, 49, 73 and 74.

Model designation MSMD series, 200W to 750W

e.g.) M S M D 0 2 2 S 1 S

Symbol	Type
MSMD	Low inertia (200W-750W)

Voltage specifications

Symbol	Specifications
2	200V

Design order
1 : Standard

Motor structure

Symbol	Shaft		Holding brake		Oil seal	
	Round	Key-way, center tap	without	with	without	with*
A	●		●		●	
B	●			●	●	
S		●	●		●	
T		●		●	●	

*Motor with oil seal is manufactured by order.

Motor rated output

Symbol	Rated output
02	200W
04	400W
08	750W

Rotary encoder specifications

Symbol	Format	Pulse counts	Resolution	Wires
P	Incremental	2500P/r	10000	5
S	Absolute/Incremental	17-bit	131072	7

Torque characteristics at AC200V of power voltage

(Dotted line represents the torque at 10% less supply voltage.)

MSMD022□1□

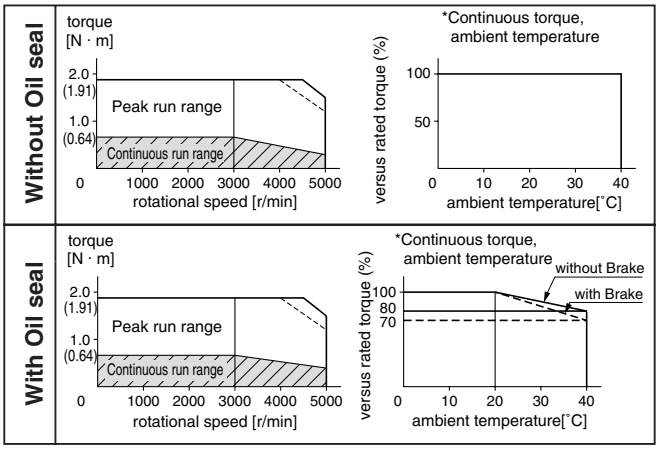

MSMD042□1□

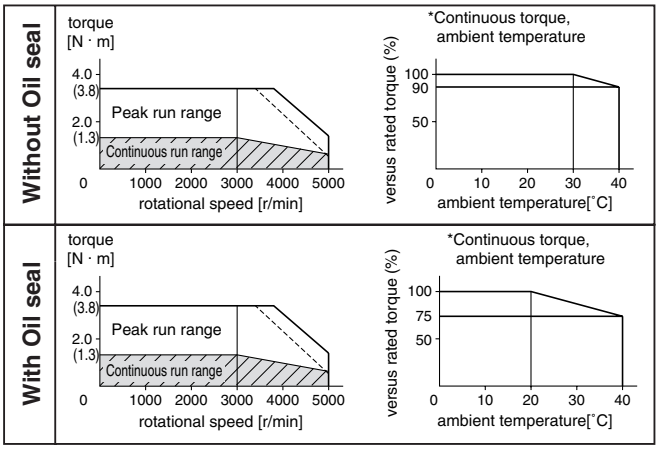

MSMD082□1□

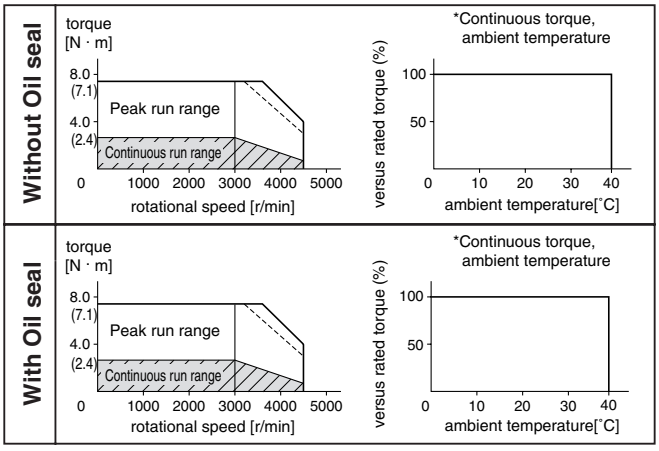

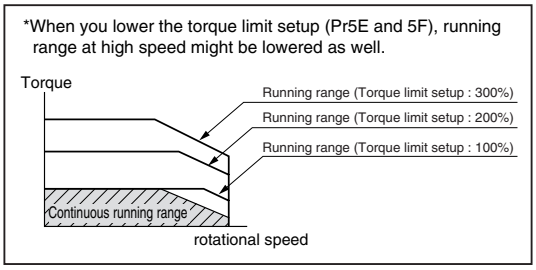

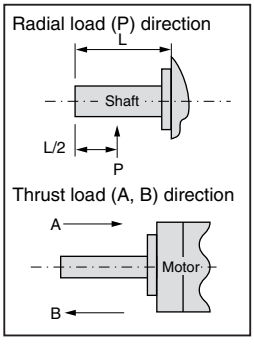

Note) 1. Regenerative brake frequency represents the frequency of the motor's stops from the rated speed with deceleration without load.
- If the load is connected, frequency will be defines as 1/(m+1), where m=load moment of inertia/rotor moment of inertia.
- When the motor speed exceeds the rated speed, regenerative brake frequency is in inverse proportion to the square of (running speed/rated speed).
- Power supply voltage is AC230V (at 200V of the main voltage). If the supply voltage fluctuates, frequency is in inverse proportion to the square of (Running supply voltage/230) relative to the value in the table.
- When regeneration occurs continuously such cases as running speed frequently changes or vertical feeding, consult us or a dealer.

2. If the effective torque is within the rated torque, there is no limit in generative brake.
3. Consult us or a dealer if the load moment of inertia exceeds the specified value.
4. Specified releasing time is obtained with the use of surge absorber for brake (Z15D271 by Ishizuka Electronic or equivalent). ( ) represents the actually measured value using a diode (200V, 1A or equivalent)

Motor Specifications and Ratings 100V MQMA

100W to 400W Low inertia, Flat, Small Capacity

			AC100V					
Motor model		MQMA	011P1□	011S1□	021P1□	021S1□	041P1□	041S1□
Applicable driver	Model No.	A4 series	MADDT1107		MBDDT2110		MCDDT3120	
		A4F series	MADDT1107F		MBDDT2110F		MCDDT3120F	
		A4P series	MADDT1107P		MBDDT2110P		MCDDT3120P	
	Frame symbol		Frame A		Frame B		Frame C	
Power supply capacity (kVA)			0.4		0.5		0.9	
Rated output (W)			100		200		400	
Rated torque (N · m)			0.32		0.64		1.3	
Momentary Max. peak torque (N · m)			0.95		1.91		3.82	
Rated current (Arms)			1.6		2.5		4.4	
Max. current (Ao-p)			6.9		10.5		18.6	
Regenerative brake frequency (times/min) Note)1	Without option		No limit Note)2					
	DV0P4280		No limit Note)2		———		———	
	DV0P4282		———		———		No limit Note)2	
	DV0P4283		———		No limit Note)2		———	
Rated rotational speed (r/min)			3000					
Max. rotational speed (r/min)			5000				4500	
Moment of inertia of rotor ($\times 10^{-4}$ kg · m^2)	Without brake		0.09	0.10	0.34	0.35	0.64	0.65
	With brake		0.12	0.13	0.42	0.43	0.72	0.73
Recommended moment of inertia ratio of the load and the rotor Note)3			20 times or less					
Rotary encoder specifications			2500P/r Incremental	17-bit Absolute/ Incremental	2500P/r Incremental	17-bit Absolute/ Incremental	2500P/r Incremental	17-bit Absolute/ Incremental
	Resolution per single turn		10000	131072	10000	131072	10000	131072
Protective enclosure rating			IP65 (except rotating portion of output shaft and lead wire end)					
Environment	Ambient temperature		0 to 40˚C (free from freezing), Storage : –20 to +65˚C (Max.temperature guarantee 80˚C for 72 hours <Nomal temperature>)					
	Ambient humidity		85%RH or lower (free from condensing)					
	Installation location		Indoors (no direct sunlight), free from corrosive gas, inflammable gas, oil mist and dust					
	Altitude		1000m or lower					
	Vibration resistance		49m/s^2 or less	24m/s^2 or less	49m/s^2 or less	24m/s^2 or less	49m/s^2 or less	24m/s^2 or less
Mass (kg), ( ) represents holding brake type			0.65 (0.90)	0.75 (1.0)	1.3 (2.0)	1.4 (2.1)	1.8 (2.5)	1.9 (2.6)

Brake specifications (This brake will be released when it is energized. Do not use this for braking the motor in motion.)		
Static friction torque (N · m)	0.29	1.27
Engaging time (ms)	50	60
Releasing time (ms) Note)4	15 (100)	15 (100)
Exciting current (DC) (A)	0.29	0.41
Releasing voltage	DC1V or more	
Exciting voltage	DC 24 V ±5%	

Permissible load			
During assembly	Radial load P-direction (N)	147	392
	Thrust load A-direction (N)	88	147
	Thrust load B-direction (N)	117	196
During operation	Radial load P-direction (N)	68	245
	Thrust load A-direction (N)	58	98
	Thrust load B-direction (N)	58	98

For motor dimensions, refer to page A4-118, and for the diver, refer to pages A4-22, 23, 48, 49, 73 and 74.

Model designation MQMA series, 100W to 400W

e.g.) M Q M A 0 1 1 S 1 S

Symbol	Type
MQMA	Low inertia (100W-400W)

Voltage specifications

Symbol	Specifications
1	100V

Design order
1 : Standard

Motor structure

Symbol	Shaft		Holding brake		Oil seal	
	Round	Key-way, center tap	without	with	without	with*
A	●		●		●	
B	●			●	●	
S		●	●		●	
T		●		●	●	

*Motor with oil seal is manufactured by order.

Motor rated output

Symbol	Rated output
01	100W
02	200W
04	400W

Rotary encoder specifications

Symbol	Format	Pulse counts	Resolution	Wires
P	Incremental	2500P/r	10000	5
S	Absolute/Incremental	17-bit	131072	7

Torque characteristics at AC100V of power voltage

(Dotted line represents the torque at 10% less supply voltage.)

MQMA011□1□

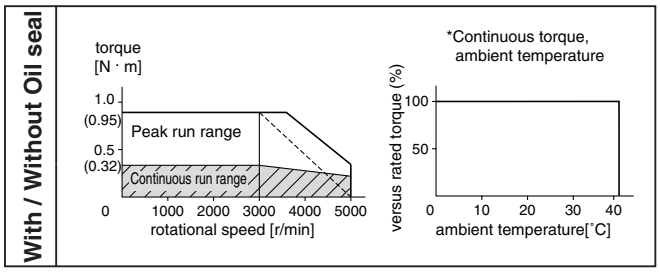

MQMA021□1□

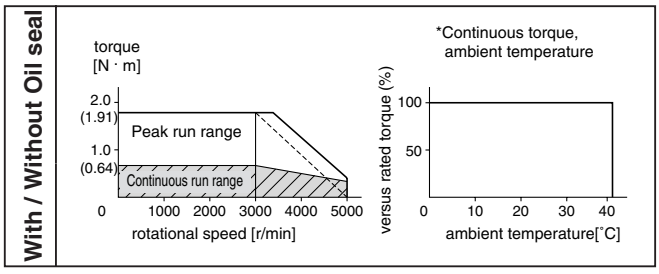

MQMA041□1□

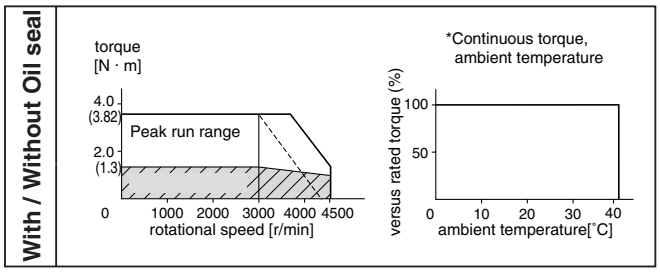

*When you lower the torque limit setup (Pr5E and 5F), running range at high speed might be lowered as well.

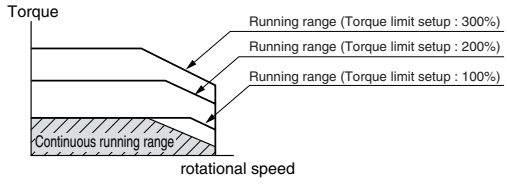

Radial load (P) direction

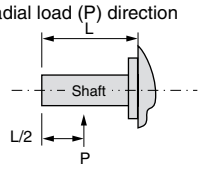

Thrust load (A, B) direction

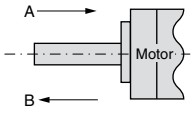

Note) 1. Regenerative brake frequency represents the frequency of the motor's stops from the rated speed with deceleration without load.
- If the load is connected, frequency will be defines as 1/(m+1), where m=load moment of inertia/rotor moment of inertia.
- When the motor speed exceeds the rated speed, regenerative brake frequency is in inverse proportion to the square of (running speed/rated speed).
- Power supply voltage is AC115V (at 100V of the main voltage). If the supply voltage fluctuates, frequency is in inverse proportion to the square of (Running supply voltage/115) relative to the value in the table.
- When regeneration occurs continuously such cases as running speed frequently changes or vertical feeding, consult us or a dealer.

2. If the effective torque is within the rated torque, there is no limit in generative brake.
3. Consult us or a dealer if the load moment of inertia exceeds the specified value.
4. Specified releasing time is obtained with the use of surge absorber for brake (Z15D151 by Ishizuka Electronic or equivalent). ( ) represents the actually measured value using a diode (200V, 1A or equivalent)

Motor Specifications and Ratings 200V MQMA

100W to 400W Low inertia, Flat, Small Capacity

			AC200V					
Motor model		MQMA	012P1□	012S1□	022P1□	022S1□	042P1□	042S1□
Applicable driver	Model No.	A4 series	MADDT1205		MADDT1207		MBDDT2210	
		A4F series	MADDT1205F		MADDT1207F		MBDDT2210F	
		A4P series	MADDT1205P		MADDT1207P		MBDDT2210P	
	Frame symbol		Frame A				Frame B	
Power supply capacity (kVA)			0.3		0.5		0.9	
Rated output (W)			100		200		400	
Rated torque (N · m)			0.32		0.64		1.3	
Momentary Max. peak torque (N · m)			0.95		1.91		3.82	
Rated current (Arms)			1.0		1.6		2.5	
Max. current (Ao-p)			4.3		6.8		10.5	
Regenerative brake frequency (times/min) Note)1	Without option		No limit Note)2					
	DV0P4283		No limit Note)2					
Rated rotational speed (r/min)			3000					
Max. rotational speed (r/min)			5000					
Moment of inertia of rotor ($\times 10^{-4}$ kg · m^2)	Without brake		0.090	0.100	0.340	0.350	0.640	0.650
	With brake		0.120	0.130	0.420	0.430	0.720	0.730
Recommended moment of inertia ratio of the load and the rotor Note)3			20 times or less					
Rotary encoder specifications			2500P/r Incremental	17-bit Absolute/ Incremental	2500P/r Incremental	17-bit Absolute/ Incremental	2500P/r Incremental	17-bit Absolute/ Incremental
	Resolution per single turn		10000	131072	10000	131072	10000	131072
Protective enclosure rating			IP65 (except rotating portion of output shaft and lead wire end)					
Environment	Ambient temperature		0 to 40˚C (free from freezing), Storage : –20 to +65˚C (Max.temperature guarantee 80˚C for 72 hours <Nomal temperature>)					
	Ambient humidity		85%RH or lower (free from condensing)					
	Installation location		Indoors (no direct sunlight), free from corrosive gas, inflammable gas, oil mist and dust					
	Altitude		1000m or lower					
	Vibration resistance		49m/s^2 or less	24m/s^2 or less	49m/s^2 or less	24m/s^2 or less	49m/s^2 or less	24m/s^2 or less
Mass (kg), ( ) represents holding brake type			0.65 (0.90)	0.75 (1.0)	1.3 (2.0)	1.4 (2.1)	1.8 (2.5)	1.9 (2.6)

Brake specifications (This brake will be released when it is energized. Do not use this for braking the motor in motion.)		
Static friction torque (N · m)	0.29	1.27
Engaging time (ms)	50	60
Releasing time (ms) Note)4	15 (100)	15 (100)
Exciting current (DC) (A)	0.29	0.41
Releasing voltage	DC1V or more	
Exciting voltage	DC 24 V ±10%	

Permissible load			
During assembly	Radial load P-direction (N)	147	392
	Thrust load A-direction (N)	88	147
	Thrust load B-direction (N)	117	196
During operation	Radial load P-direction (N)	68	245
	Thrust load A-direction (N)	58	98
	Thrust load B-direction (N)	58	98

For motor dimensions, refer to page A4-118, and for the diver, refer to pages A4-22, 48 and 73.

Model designation MQMA series, 100W to 400W

e.g.) M Q M A 0 1 2 S 1 S

Symbol	Type
MQMA	Low inertia (100W-400W)

Voltage specifications

Symbol	Specifications
2	200V

Design order
1 : Standard

Motor structure

Symbol	Shaft		Holding brake		Oil seal	
	Round	Key-way, center tap	without	with	without	with*
A	●		●		●	
B	●			●	●	
S		●	●		●	
T		●		●	●	

*Motor with oil seal is manufactured by order.

Motor rated output

Symbol	Rated output
01	100W
02	200W
04	400W

Rotary encoder specifications

Symbol	Format	Pulse counts	Resolution	Wires
P	Incremental	2500P/r	10000	5
S	Absolute/Incremental	17-bit	131072	7

Torque characteristics at AC200V of power voltage

(Dotted line represents the torque at 10% less supply voltage.)

MQMA012□1□

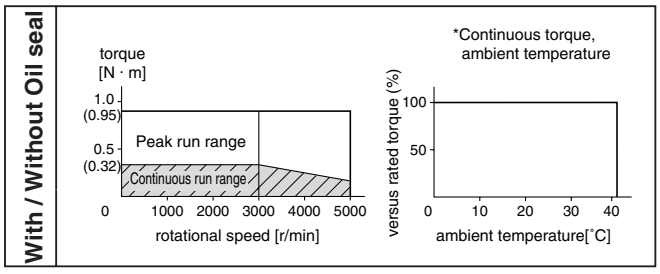

MQMA022□1□

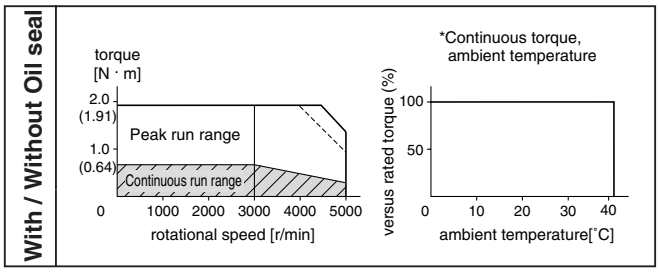

MQMA042□1□

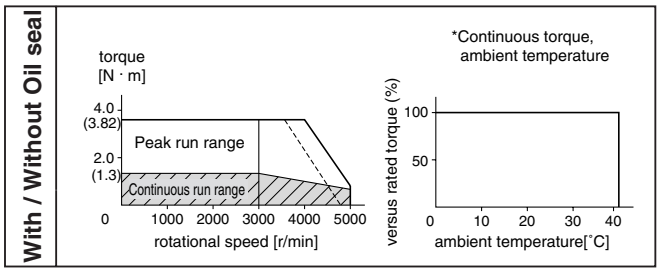

*When you lower the torque limit setup (Pr5E and 5F), running range at high speed might be lowered as well.

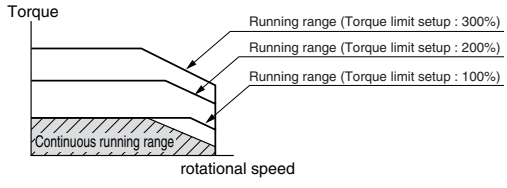

Radial load (P) direction

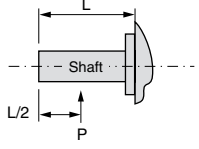

Thrust load (A, B) direction

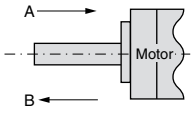

Note) 1. Regenerative brake frequency represents the frequency of the motor's stops from the rated speed with deceleration without load.
- If the load is connected, frequency will be defines as 1/(m+1), where m=load moment of inertia/rotor moment of inertia.
- When the motor speed exceeds the rated speed, regenerative brake frequency is in inverse proportion to the square of (running speed/rated speed).
- Power supply voltage is AC230V (at 200V of the main voltage). If the supply voltage fluctuates, frequency is in inverse proportion to the square of (Running supply voltage/230) relative to the value in the table.
- When regeneration occurs continuously such cases as running speed frequently changes or vertical feeding, consult us or a dealer.

2. If the effective torque is within the rated torque, there is no limit in generative brake.
3. Consult us or a dealer if the load moment of inertia exceeds the specified value.
4. Specified releasing time is obtained with the use of surge absorber for brake (Z15D151 by Ishizuka Electronic or equivalent). ( ) represents the actually measured value using a diode (200V, 1A or equivalent)

Motor Specifications and Ratings 200V MSMA

1.0kW to 2.0kW Low inertia, Medium Capacity

			AC200V					
Motor model		MSMA	102P1□	102S1□	152P1□	152S1□	202P1□	202S1□
Applicable driver	Model No.	A4 series	MDDDT5540				MEDDT7364	
		A4F series	MDDDT5540F				MEDDT7364F	
		A4P series	MDDDT5540P				MEDDT7364P	
	Frame symbol		Frame D				Frame E	
Power supply capacity (kVA)			1.8		2.3		3.3	
Rated output (W)			1000		1500		2000	
Rated torque (N · m)			3.18		4.77		6.36	
Momentary Max. peak torque (N · m)			9.5		14.3		19.1	
Rated current (Arms)			7.2		9.4		13.0	
Max. current (Ao-p)			30		40		56	
Regenerative brake frequency (times/min) Note)1	Without option		No limit Note)2					
	DV0P4284		No limit Note)2				–	
	DV0P4285 x 2		–				No limit Note)2	
Rated rotational speed (r/min)			3000					
Max. rotational speed (r/min)			5000					
Moment of inertia of rotor ($x10^{-4}$ kg · m^2)	Without brake		1.69		2.59		3.46	
	With brake		1.88		2.84		3.81	
Recommended moment of inertia ratio of the load and the rotor Note)3			15 times or less					
Rotary encoder specifications			2500P/r Incremental	17-bit Absolute/ Incremental	2500P/r Incremental	17-bit Absolute/ Incremental	2500P/r Incremental	17-bit Absolute/ Incremental
	Resolution per single turn		10000	131072	10000	131072	10000	131072
Protective enclosure rating			IP65 (except rotating portion of output shaft and lead wire end)					
Environment	Ambient temperature		0 to 40˚C (free from freezing), Storage : –20 to +65˚C (Max.temperature guarantee 80˚C for 72 hours <Nomal temperature>)					
	Ambient humidity		85%RH or lower (free from condensing)					
	Installation location		Indoors (no direct sunlight), free from corrosive gas, inflammable gas, oil mist and dust					
	Altitude		1000m or lower					
	Vibration resistance		49m/s^2 or less					
Mass (kg), ( ) represents holding brake type			4.5 (5.1)		5.1 (6.5)		6.5 (7.9)	

Brake specifications (This brake will be released when it is energized. Do not use this for braking the motor in motion.)		
Static friction torque (N · m)	4.9	7.8
Engaging time (ms)	50	50
Releasing time (ms) Note)4	15 (100)	15 (100)
Exciting current (DC) (A)	0.74	0.81
Releasing voltage	DC2V or more	
Exciting voltage	DC 24 V ±10%	

Permissible load			
During assembly	Radial load P-direction (N)	686	980
	Thrust load A-direction (N)	392	588
	Thrust load B-direction (N)	490	686
During operation	Radial load P-direction (N)	392	490
	Thrust load A-direction (N)	147	196
	Thrust load B-direction (N)	147	196

For motor dimensions, refer to page A4-119, and for the diver, refer to pages A4-23, 24, 49, 50, 74 and 75.

Model designation MSMA series, 1.0kW to 2.0kW

e.g.) M S M A 1 0 2 S 1 G

Symbol	Type
MSMA	Low inertia (1.0kW-2.0kW)

Voltage specifications

Symbol	Specifications
2	200V

Design order
1 : Standard

Motor structure

Symbol	Shaft		Holding brake		Oil seal	
	Round	Key-way	without	with	without	with
C	●		●			●
D	●			●		●
G		●	●			●
H		●		●		●

Products are standard stock items or build to order items. See index (page F31).

Motor rated output

Symbol	Rated output
10	1.0kW
15	1.5kW
20	2.0kW

Rotary encoder specifications

Symbol	Format	Pulse counts	Resolution	Wires
P	Incremental	2500P/r	10000	5
S	Absolute/Incremental	17-bit	131072	7

Torque characteristics at AC200V of power voltage

(Dotted line represents the torque at 10% less supply voltage.)

MSMA102□1□

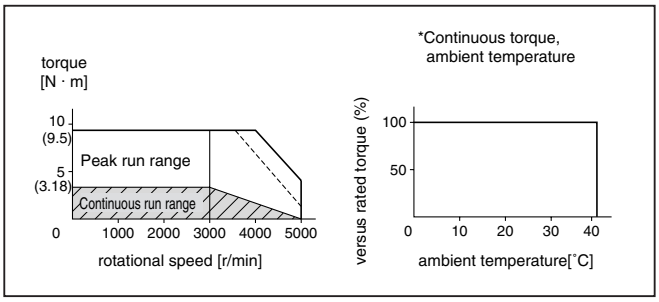

MSMA152□1□

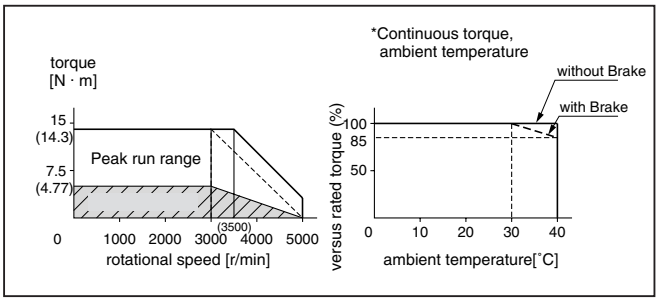

MSMA202□1□

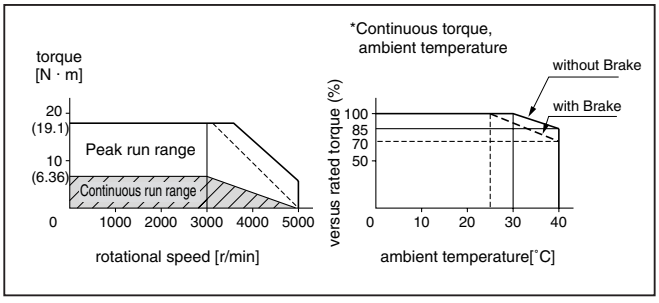

*When you lower the torque limit setup (Pr5E and 5F), running range at high speed might be lowered as well.

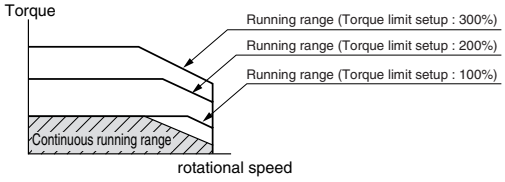

Radial load (P) direction

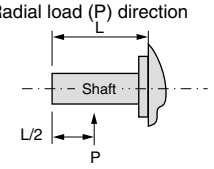

Thrust load (A, B) direction

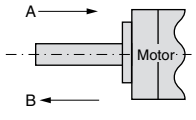

Note) 1. Regenerative brake frequency represents the frequency of the motor's stops from the rated speed with deceleration without load.
- If the load is connected, frequency will be defines as 1/(m+1), where m=load moment of inertia/rotor moment of inertia.
- When the motor speed exceeds the rated speed, regenerative brake frequency is in inverse proportion to the square of (running speed/rated speed).
- Power supply voltage is AC230V (at 200V of the main voltage). If the supply voltage fluctuates, frequency is in inverse proportion to the square of (Running supply voltage/230) relative to the value in the table.
- When regeneration occurs continuously such cases as running speed frequently changes or vertical feeding, consult us or a dealer.

2. If the effective torque is within the rated torque, there is no limit in generative brake.
3. Consult us or a dealer if the load moment of inertia exceeds the specified value.
4. Specified releasing time is obtained with the use of surge absorber for brake (Z15D151 by Ishizuka Electronic or equivalent). ( ) represents the actually measured value using a diode (200V, 1A or equivalent)

Motor Specifications and Ratings 200V MSMA

3.0kW to 5.0kW Low inertia, Medium Capacity

			AC200V					
Motor model		MSMA	302P1□	302S1□	402P1□	402S1□	502P1□	502S1□
Applicable driver	Model No.	A4 series	MFDDTA390		MFDDTB3A2			
		A4F series	MFDDTA390F		MFDDTB3A2F			
		A4P series	MFDDTA390P		MFDDTB3A2P			
	Frame symbol		Frame F					
Power supply capacity (kVA)			4.5		6.0		7.5	
Rated output (W)			3000		4000		5000	
Rated torque (N · m)			9.54		12.6		15.8	
Momentary Max. peak torque (N · m)			28.6		37.9		47.6	
Rated current (Arms)			18.6		24.7		28.5	
Max. current (Ao-p)			80		105		120	
Regenerative brake frequency (times/min) Note)1	Without option		No limit Note)2				326	
	DV0P4285 x 2		No limit Note)2					
Rated rotational speed (r/min)			3000					
Max. rotational speed (r/min)			5000		4500			
Moment of inertia of rotor ($\times 10^{-4}$ kg · m^2)	Without brake		6.77		12.7		17.8	
	With brake		7.45		14.1		19.7	
Recommended moment of inertia ratio of the load and the rotor Note)3			15 times or less					
Rotary encoder specifications			2500P/r Incremental	17-bit Absolute/ Incremental	2500P/r Incremental	17-bit Absolute/ Incremental	2500P/r Incremental	17-bit Absolute/ Incremental
	Resolution per single turn		10000	131072	10000	131072	10000	131072
Protective enclosure rating			IP65 (except rotating portion of output shaft and lead wire end)					
Environment	Ambient temperature		0 to 40˚C (free from freezing), Storage : –20 to +65˚C (Max.temperature guarantee 80˚C for 72 hours <Nomal temperature>)					
	Ambient humidity		85%RH or lower (free from condensing)					
	Installation location		Indoors (no direct sunlight), free from corrosive gas, inflammable gas, oil mist and dust					
	Altitude		1000m or lower					
	Vibration resistance		49m/s^2 or less					
Mass (kg), ( ) represents holding brake type			9.3 (11.0)		12.9 (14.8)		17.3 (19.2)	

Brake specifications (This brake will be released when it is energized. Do not use this for braking the motor in motion.)		
Static friction torque (N · m)	11.8	16.1
Engaging time (ms)	80	110
Releasing time (ms) Note)4	15 (100)	50 (130)
Exciting current (DC) (A)	0.81	0.90
Releasing voltage	DC2V or more	
Exciting voltage	DC 24 V ±10%	

Permissible load			
During assembly	Radial load P-direction (N)	980	
	Thrust load A-direction (N)	588	
	Thrust load B-direction (N)	686	
During operation	Radial load P-direction (N)	490	784
	Thrust load A-direction (N)	196	343
	Thrust load B-direction (N)	196	343

For motor dimensions, refer to page A4-120, and for the diver, refer to pages A4-24, 50 and 75.

Model designation MSMA series, 3.0kW to 5.0kW

e.g.) M S M A 3 0 2 S 1 G

Symbol	Type
MSMA	Low inertia (3.0kW-5.0kW)

Voltage specifications

Symbol	Specifications
2	200V

Design order
1 : Standard

Motor structure

Symbol	Shaft		Holding brake		Oil seal	
	Round	Key-way	without	with	without	with
C	●		●			●
D	●			●		●
G		●	●			●
H		●		●		●

Products are standard stock items or build to order items. See index (page F31).

Motor rated output

Symbol	Rated output
30	3.0kW
40	4.0kW
50	5.0kW

Rotary encoder specifications

Symbol	Format	Pulse counts	Resolution	Wires
P	Incremental	2500P/r	10000	5
S	Absolute/Incremental	17-bit	131072	7

Torque characteristics at AC200V of power voltage

(Dotted line represents the torque at 10% less supply voltage.)

MSMA302□1□

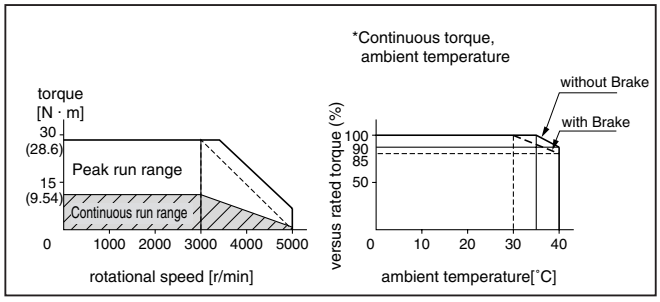

MSMA402□1□

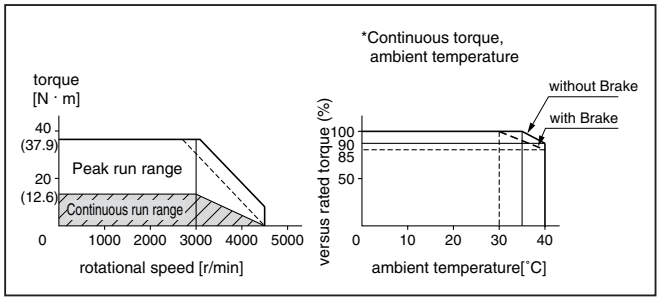

MSMA502□1□

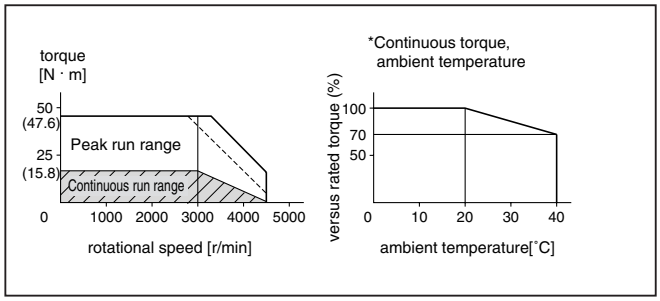

*When you lower the torque limit setup (Pr5E and 5F), running range at high speed might be lowered as well.

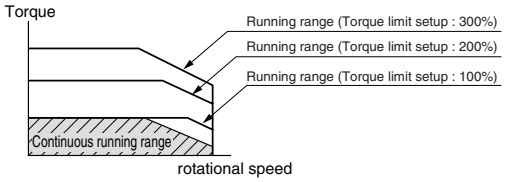

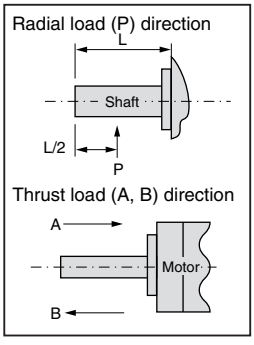

Note) 1. Regenerative brake frequency represents the frequency of the motor's stops from the rated speed with deceleration without load.
- If the load is connected, frequency will be defines as 1/(m+1), where m=load moment of inertia/rotor moment of inertia.
- When the motor speed exceeds the rated speed, regenerative brake frequency is in inverse proportion to the square of (running speed/rated speed).
- Power supply voltage is AC230V (at 200V of the main voltage). If the supply voltage fluctuates, frequency is in inverse proportion to the square of (Running supply voltage/230) relative to the value in the table.
- When regeneration occurs continuously such cases as running speed frequently changes or vertical feeding, consult us or a dealer.

2. If the effective torque is within the rated torque, there is no limit in generative brake.
3. Consult us or a dealer if the load moment of inertia exceeds the specified value.
4. Specified releasing time is obtained with the use of surge absorber for brake (Z15D151 by Ishizuka Electronic or equivalent). ( ) represents the actually measured value using a diode (200V, 1A or equivalent)

Motor Specifications and Ratings 200V MDMA

1.0kW to 1.5kW Low inertia, Medium Capacity

			AC200V			
Motor model		MDMA	102P1□	102S1□	152P1□	152S1□
Applicable driver	Model No.	A4 series	MDDDT3530		MDDDT5540	
		A4F series	MDDDT3530F		MDDDT5540F	
		A4P series	MDDDT3530P		MDDDT5540P	
	Frame symbol		Frame D			
Power supply capacity (kVA)			1.8		2.3	
Rated output (W)			1000		1500	
Rated torque (N · m)			4.8		7.15	
Momentary Max. peak torque (N · m)			14.4		21.5	
Rated current (Arms)			5.6		9.4	
Max. current (Ao-p)			24		40	
Regenerative brake frequency (times/min) Note)1	Without option		No limit Note)2			
	DV0P4284		No limit Note)2			
Rated rotational speed (r/min)			2000			
Max. rotational speed (r/min)			3000			
Moment of inertia of rotor ($\times 10^{-4}$ kg · m^2)	Without brake		6.17		11.2	
	With brake		6.79		12.3	
Recommended moment of inertia ratio of the load and the rotor Note)3			10 times or less			
Rotary encoder specifications			2500P/r Incremental	17-bit Absolute/ Incremental	2500P/r Incremental	17-bit Absolute/ Incremental
	Resolution per single turn		10000	131072	10000	131072
Protective enclosure rating			IP65 (except rotating portion of output shaft and lead wire end)			
Environment	Ambient temperature		0 to 40˚C (free from freezing), Storage : –20 to +65˚C (Max.temperature guarantee 80˚C for 72 hours <Nomal temperature>)			
	Ambient humidity		85%RH or lower (free from condensing)			
	Installation location		Indoors (no direct sunlight), free from corrosive gas, inflammable gas, oil mist and dust			
	Altitude		1000m or lower			
	Vibration resistance		49m/s^2 or less			
Mass (kg), ( ) represents holding brake type			6.8 (8.7)		8.5 (10.1)	

Brake specifications (This brake will be released when it is energized. Do not use this for braking the motor in motion.)		
Static friction torque (N · m)	4.9	13.7
Engaging time (ms)	80	100
Releasing time (ms) Note)4	70 (200)	50 (130)
Exciting current (DC) (A)	0.59	0.79
Releasing voltage	DC2V or more	
Exciting voltage	DC 24 V ±10%	

Permissible load		
During assembly	Radial load P-direction (N)	980
	Thrust load A-direction (N)	588
	Thrust load B-direction (N)	686
During operation	Radial load P-direction (N)	490
	Thrust load A-direction (N)	196
	Thrust load B-direction (N)	196

For motor dimensions, refer to page A4-121, and for the diver, refer to pages A4-23, 49 and 74.

Model designation MDMA series, 1.0kW to 1.5kW

e.g.) M D M A 1 0 2 S 1 G

Symbol	Type
MDMA	Middle inertia (1.0kW-1.5kW)

Voltage specifications

Symbol	Specifications
2	200V

Design order
1 : Standard

Motor structure

Symbol	Shaft		Holding brake		Oil seal	
	Round	Key-way	without	with	without	with
C	●		●			●
D	●			●		●
G		●	●			●
H		●		●		●

Products are standard stock items or build to order items. See index (page F31).

Motor rated output

Symbol	Rated output
10	1.0kW
15	1.5kW

Rotary encoder specifications

Symbol	Format	Pulse counts	Resolution	Wires
P	Incremental	2500P/r	10000	5
S	Absolute/Incremental	17-bit	131072	7

Torque characteristics at AC200V of power voltage

(Dotted line represents the torque at 10% less supply voltage.)

MDMA102□1□

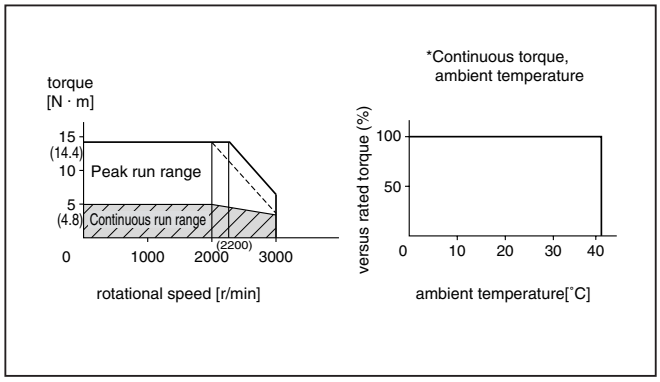

MDMA152□1□

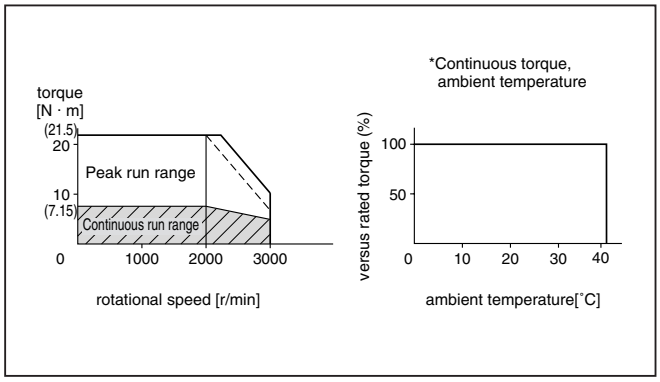

*When you lower the torque limit setup (Pr5E and 5F), running range at high speed might be lowered as well.

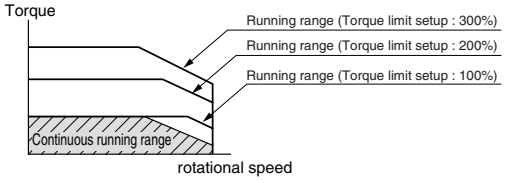

Radial load (P) direction

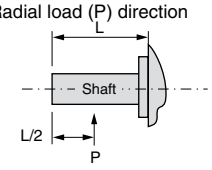

Thrust load (A, B) direction

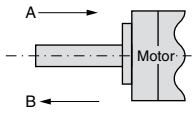

Note) 1. Regenerative brake frequency represents the frequency of the motor's stops from the rated speed with deceleration without load.
- If the load is connected, frequency will be defines as 1/(m+1), where m=load moment of inertia/rotor moment of inertia.
- When the motor speed exceeds the rated speed, regenerative brake frequency is in inverse proportion to the square of (running speed/rated speed).
- Power supply voltage is AC230V (at 200V of the main voltage). If the supply voltage fluctuates, frequency is in inverse proportion to the square of (Running supply voltage/230) relative to the value in the table.
- When regeneration occurs continuously such cases as running speed frequently changes or vertical feeding, consult us or a dealer.

2. If the effective torque is within the rated torque, there is no limit in generative brake.
3. Consult us or a dealer if the load moment of inertia exceeds the specified value.
4. Specified releasing time is obtained with the use of surge absorber for brake (Z15D151 by Ishizuka Electronic or equivalent). ( ) represents the actually measured value using a diode (200V, 1A or equivalent)

Motor Specifications and Ratings 200V MDMA

2.0kW to 3.0kW Middle inertia, Medium Capacity

			AC200V			
Motor model		MDMA	202P1□	202S1□	302P1□	302S1□
Applicable driver	Model No.	A4 series	MEDDT7364		MFDDTA390	
		A4F series	MEDDT7364F		MFDDTA390F	
		A4P series	MEDDT7364P		MFDDTA390P	
	Frame symbol		Frame E		Frame F	
Power supply capacity (kVA)			3.3		4.5	
Rated output (W)			2000		3000	
Rated torque (N · m)			9.54		14.3	
Momentary Max. peak torque (N · m)			28.5		42.9	
Rated current (Arms)			12.3		17.8	
Max. current (Ao-p)			52		76	
Regenerative brake frequency (times/min) Note)1	Without option		No limit Note)2			
	DV0P4285 x 2		No limit Note)2			
Rated rotational speed (r/min)			2000			
Max. rotational speed (r/min)			3000			
Moment of inertia of rotor ($\times 10^{-4}$ kg · m^2)	Without brake		15.2		22.3	
	With brake		16.7		24.6	
Recommended moment of inertia ratio of the load and the rotor Note)3			10 times or less			
Rotary encoder specifications			2500P/r Incremental	17-bit Absolute/ Incremental	2500P/r Incremental	17-bit Absolute/ Incremental
	Resolution per single turn		10000	131072	10000	131072
Protective enclosure rating			IP65 (except rotating portion of output shaft and lead wire end)			
Environment	Ambient temperature		0 to 40˚C (free from freezing), Storage : –20 to +65˚C (Max.temperature guarantee 80˚C for 72 hours <Nomal temperature>)			
	Ambient humidity		85%RH or lower (free from condensing)			
	Installation location		Indoors (no direct sunlight), free from corrosive gas, inflammable gas, oil mist and dust			
	Altitude		1000m or lower			
	Vibration resistance		49m/s^2 or less			
Mass (kg), ( ) represents holding brake type			10.6 (12.5)		14.6 (16.5)	

Brake specifications (This brake will be released when it is energized. Do not use this for braking the motor in motion.)		
Static friction torque (N · m)	13.7	16.1
Engaging time (ms)	100	110
Releasing time (ms) Note)4	50 (130)	50 (130)
Exciting current (DC) (A)	0.79	0.90
Releasing voltage	DC2V or more	
Exciting voltage	DC 24 V ±10%	

Permissible load			
During assembly	Radial load P-direction (N)	980	980
	Thrust load A-direction (N)	588	588
	Thrust load B-direction (N)	686	686
During operation	Radial load P-direction (N)	490	784
	Thrust load A-direction (N)	196	343
	Thrust load B-direction (N)	196	343

For motor dimensions, refer to page A4-122, and for the diver, refer to pages A4-24, 50 and 75.

Model designation MDMA series, 2.0kW to 3.0kW

e.g.) M D M A 2 0 2 S 1 G

Symbol	Type
MDMA	Middle inertia (2.0kW-3.0kW)

Voltage specifications

Symbol	Specifications
2	200V

Motor rated output

Symbol	Rated output
20	2.0kW
30	3.0kW

Rotary encoder specifications

Symbol	Format	Pulse counts	Resolution	Wires
P	Incremental	2500P/r	10000	5
S	Absolute/Incremental	17-bit	131072	7

Design order
1 : Standard

Motor structure

Symbol	Shaft		Holding brake		Oil seal	
	Round	Key-way	without	with	without	with
C	●		●			●
D	●			●		●
G		●	●			●
H		●		●		●

Products are standard stock items or build to order items. See index (page F31).

Torque characteristics at AC200V of power voltage

(Dotted line represents the torque at 10% less supply voltage.)

MDMA202□1□

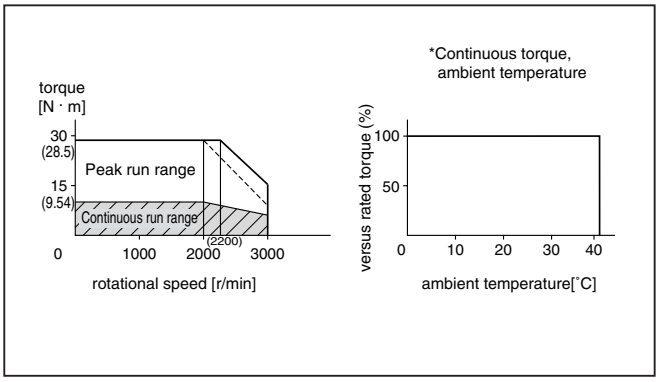

MDMA302□1□

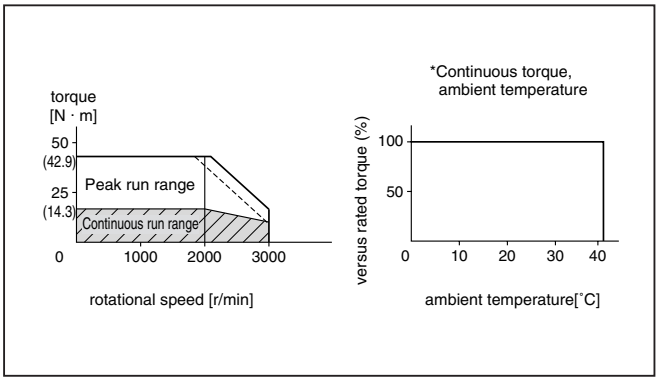

*When you lower the torque limit setup (Pr5E and 5F), running range at high speed might be lowered as well.

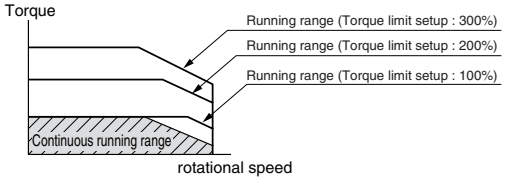

Radial load (P) direction

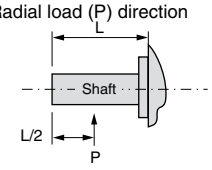

Thrust load (A, B) direction

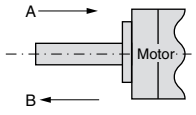

Note) 1. Regenerative brake frequency represents the frequency of the motor's stops from the rated speed with deceleration without load.
- If the load is connected, frequency will be defines as 1/(m+1), where m=load moment of inertia/rotor moment of inertia.
- When the motor speed exceeds the rated speed, regenerative brake frequency is in inverse proportion to the square of (running speed/rated speed).
- Power supply voltage is AC230V (at 200V of the main voltage). If the supply voltage fluctuates, frequency is in inverse proportion to the square of (Running supply voltage/230) relative to the value in the table.
- When regeneration occurs continuously such cases as running speed frequently changes or vertical feeding, consult us or a dealer.

2. If the effective torque is within the rated torque, there is no limit in generative brake.
3. Consult us or a dealer if the load moment of inertia exceeds the specified value.
4. Specified releasing time is obtained with the use of surge absorber for brake (Z15D151 by Ishizuka Electronic or equivalent). ( ) represents the actually measured value using a diode (200V, 1A or equivalent)

Motor Specifications and Ratings 200V MDMA

4.0kW to 7.5kW Middle inertia, Medium Capacity

			AC200V					
Motor model		MDMA	402P1□	402S1□	502P1□	502S1□	752P1□	752S1□
Applicable driver	Model No.	A4 series	MFDDTB3A2				MGDDTC3B4	
		A4F series	MFDDTB3A2F				MGDDTC3B4F	
		A4P series	MFDDTB3A2P				——	
	Frame symbol		Frame F				Frame G	
Power supply capacity (kVA)			6.0		7.5		11	
Rated output (W)			4000		5000		7500	
Rated torque (N · m)			18.8		23.8		48	
Momentary Max. peak torque (N · m)			56.4		71.4		119	
Rated current (Arms)			23.4		28.0		46.6	
Max. current (Ao-p)			100.0		120.0		165.0	
Regenerative brake frequency (times/min) Note)1	Without option		250		94		No limit Note)2	
	DV0P4285 x 2		No limit Note)2				———	
	DV0P4285 x 4		———				No limit Note)2	
Rated rotational speed (r/min)			2000				1500	
Max. rotational speed (r/min)			3000				3000	
Moment of inertia of rotor ($x10^{-4}$ kg · m^2)	Without brake		42.5		60.7		99.0	
	With brake		46.8		66.7		105.0	
Recommended moment of inertia ratio of the load and the rotor Note)3			10 times or less					
Rotary encoder specifications			2500P/r Incremental	17-bit Absolute/ Incremental	2500P/r Incremental	17-bit Absolute/ Incremental	2500P/r Incremental	17-bit Absolute/ Incremental
	Resolution per single turn		10000	131072	10000	131072	10000	131072
Protective enclosure rating			IP65 (except rotating portion of output shaft and lead wire end)					
Environment	Ambient temperature		0 to 40˚C (free from freezing), Storage : –20 to +65˚C (Max.temperature guarantee 80˚C for 72 hours <Nomal temperature>)					
	Ambient humidity		85%RH or lower (free from condensing)					
	Installation location		Indoors (no direct sunlight), free from corrosive gas, inflammable gas, oil mist and dust					
	Altitude		1000m or lower					
	Vibration resistance		49m/s^2 or less				24m/s^2 or less	
Mass (kg), ( ) represents holding brake type			18.8 (21.3)		25.0 (28.5)		41.0 (45.0)	

Brake specifications (This brake will be released when it is energized. Do not use this for braking the motor in motion.)			
Static friction torque (N · m)	21.5	24.5	58.8
Engaging time (ms)	90	80	150
Releasing time (ms) Note)4	35 (150)	25 (200)	50 (130)
Exciting current (DC) (A)	1.10	1.30	1.40
Releasing voltage	DC2V or more		
Exciting voltage	DC 24 V ±10%		

Permissible load			
During assembly	Radial load P-direction (N)	1666	2058
	Thrust load A-direction (N)	784	980
	Thrust load B-direction (N)	980	1176
During operation	Radial load P-direction (N)	784	1176
	Thrust load A-direction (N)	343	490
	Thrust load B-direction (N)	343	490

For motor dimensions, refer to page A4-123, and for the diver, refer to pages A4-24, 25, 50, 51 and 75.

Model designation MDMA series, 4.0kW to 7.5kW

e.g.) M D M A 4 0 2 S 1 G

Symbol	Type
MDMA	Middle inertia (4.0kW-7.5kW)

Voltage specifications

Symbol	Specifications
2	200V

Design order
1 : Standard

Motor structure

Symbol	Shaft		Holding brake		Oil seal	
	Round	Key-way	without	with	without	with
C	●		●			●
D	●			●		●
G		●	●			●
H		●		●		●

Products are standard stock items or build to order items. See index (page F31).

Motor rated output

Symbol	Rated output
40	4.0kW
50	5.0kW
75	7.5kW

Rotary encoder specifications

Symbol	Format	Pulse counts	Resolution	Wires
P	Incremental	2500P/r	10000	5
S	Absolute/Incremental	17-bit	131072	7

Torque characteristics at AC200V of power voltage

(Dotted line represents the torque at 10% less supply voltage.)

MDMA402□1□

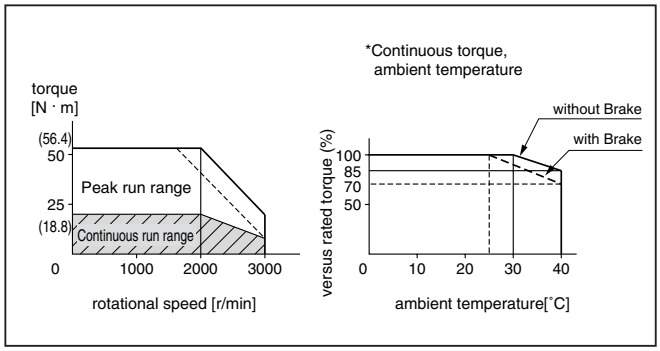

MDMA502□1□

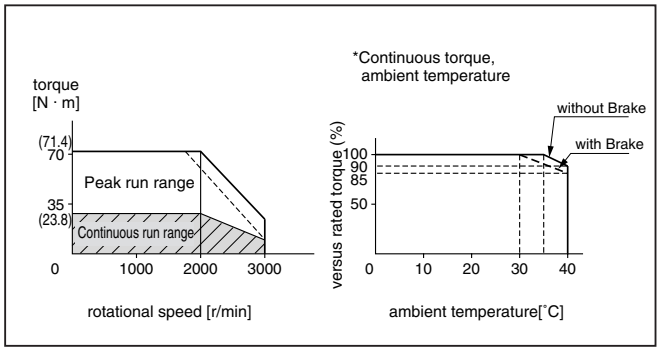

MDMA752□1□

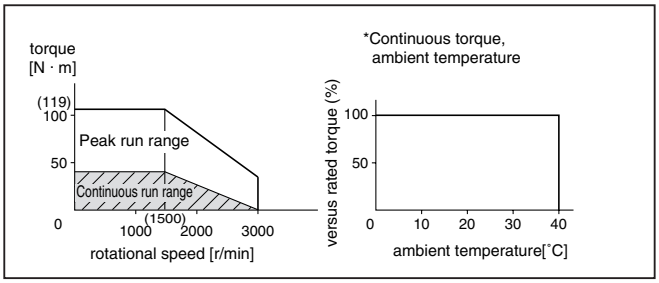

*When you lower the torque limit setup (Pr5E and 5F), running range at high speed might be lowered as well.

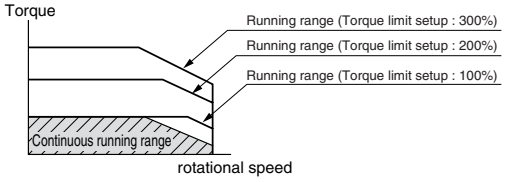

Radial load (P) direction

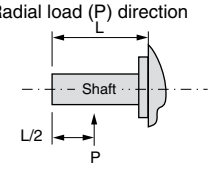

Thrust load (A, B) direction

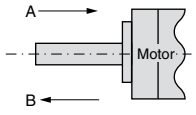

Note) 1. Regenerative brake frequency represents the frequency of the motor's stops from the rated speed with deceleration without load.
- If the load is connected, frequency will be defines as 1/(m+1), where m=load moment of inertia/rotor moment of inertia.
- When the motor speed exceeds the rated speed, regenerative brake frequency is in inverse proportion to the square of (running speed/rated speed).
- Power supply voltage is AC230V (at 200V of the main voltage). If the supply voltage fluctuates, frequency is in inverse proportion to the square of (Running supply voltage/230) relative to the value in the table.
- When regeneration occurs continuously such cases as running speed frequently changes or vertical feeding, consult us or a dealer.

2. If the effective torque is within the rated torque, there is no limit in generative brake.
3. Consult us or a dealer if the load moment of inertia exceeds the specified value.
4. Specified releasing time is obtained with the use of surge absorber for brake (Z15D151 by Ishizuka Electronic or equivalent). ( ) represents the actually measured value using a diode (200V, 1A or equivalent)

Motor Specifications and Ratings 200V MGMA

900W to 2.0kW Middle inertia, Medium Capacity

			AC200V			
Motor model		MGMA	092P1□	092S1□	202P1□	202S1□
Applicable driver	Model No.	A4 series	MDDDT5540		MFDDTA390	
		A4F series	MDDDT5540F		MFDDTA390F	
		A4P series	MDDDT5540P		MFDDTA390P	
	Frame symbol		Frame D		Frame F	
Power supply capacity (kVA)			1.8		3.8	
Rated output (W)			900		2000	
Rated torque (N · m)			8.62		19.1	
Momentary Max. peak torque (N · m)			19.3		44	
Rated current (Arms)			7.6		18.5	
Max. current (Ao-p)			24.0		60.0	
Regenerative brake frequency (times/min) Note)1	Without option		No limit Note)2			
	DV0P4284		No limit Note)2		———	
	DV0P4285 x 2		———		No limit Note)2	
Rated rotational speed (r/min)			1000			
Max. rotational speed (r/min)			2000			
Moment of inertia of rotor ($x10^{-4}$ kg · m^2)	Without brake		11.2		35.5	
	With brake		12.3		41.4	
Recommended moment of inertia ratio of the load and the rotor Note)3			10 times or less			
Rotary encoder specifications			2500P/r Incremental	17-bit Absolute/ Incremental	2500P/r Incremental	17-bit Absolute/ Incremental
	Resolution per single turn		10000	131072	10000	131072
Protective enclosure rating			IP65 (except rotating portion of output shaft and lead wire end)			
Environment	Ambient temperature		0 to 40˚C (free from freezing), Storage : –20 to +65˚C (Max.temperature guarantee 80˚C for 72 hours <Nomal temperature>)			
	Ambient humidity		85%RH or lower (free from condensing)			
	Installation location		Indoors (no direct sunlight), free from corrosive gas, inflammable gas, oil mist and dust			
	Altitude		1000m or lower			
	Vibration resistance		49m/s^2 or less			
Mass (kg), ( ) represents holding brake type			8.5 (10.0)		17.5 (21.0)	

Brake specifications (This brake will be released when it is energized. Do not use this for braking the motor in motion.)		
Static friction torque (N · m)	13.7	24.5
Engaging time (ms)	100	80
Releasing time (ms) Note)4	50 (130)	25 (200)
Exciting current (DC) (A)	0.79	1.30
Releasing voltage	DC2V or more	
Exciting voltage	DC 24 V ±10%	

Permissible load			
During assembly	Radial load P-direction (N)	980	1666
	Thrust load A-direction (N)	588	784
	Thrust load B-direction (N)	686	980
During operation	Radial load P-direction (N)	686	1176
	Thrust load A-direction (N)	196	490
	Thrust load B-direction (N)	196	490

For motor dimensions, refer to page A4-124, and for the diver, refer to pages A4-23, 24, 49, 50, 74 and 75.

Model designation MGMA series, 900W to 2.0kW

e.g.) M G M A 0 9 2 S 1 G

Symbol	Type
MGMA	Middle inertia (900W-2.0kW)

Motor rated output

Symbol	Rated output
09	900W
20	2.0kW

Voltage specifications

Symbol	Specifications
2	200V

Rotary encoder specifications

Symbol	Format	Pulse counts	Resolution	Wires
P	Incremental	2500P/r	10000	5
S	Absolute/Incremental	17-bit	131072	7

Design order
1 : Standard

Motor structure

Symbol	Shaft		Holding brake		Oil seal	
	Round	Key-way	without	with	without	with
C	●		●			●
D	●			●		●
G		●	●			●
H		●		●		●

Products are standard stock items or build to order items. See index (page F31).

Torque characteristics at AC200V of power voltage

(Dotted line represents the torque at 10% less supply voltage.)

MGMA092□1□

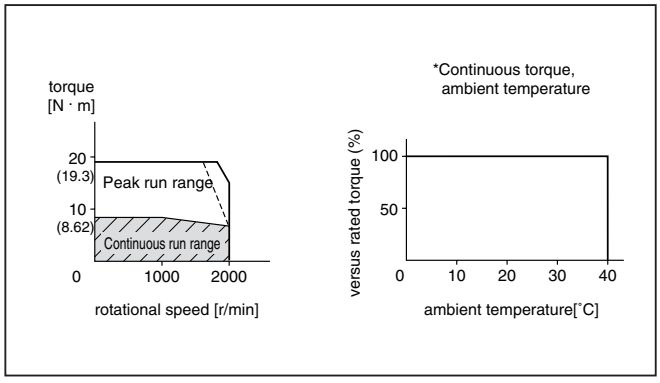

MGMA202□1□

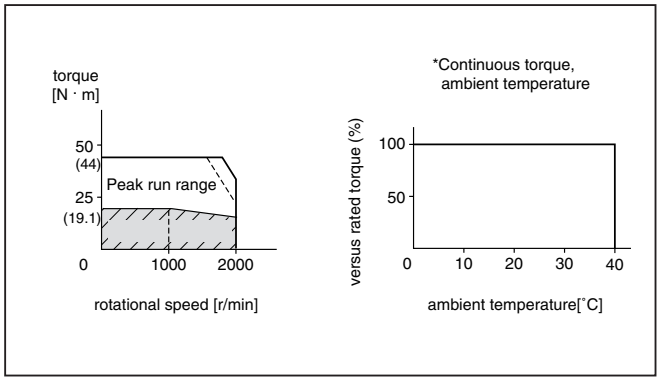

*When you lower the torque limit setup (Pr5E and 5F), running range at high speed might be lowered as well.

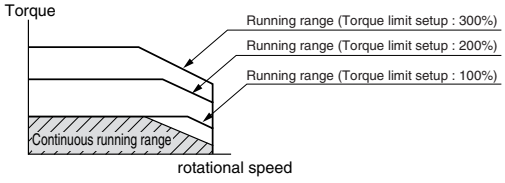

Radial load (P) direction

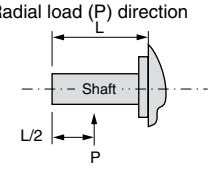

Thrust load (A, B) direction

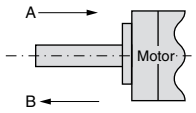

Note) 1. Regenerative brake frequency represents the frequency of the motor's stops from the rated speed with deceleration without load.
- If the load is connected, frequency will be defines as 1/(m+1), where m=load moment of inertia/rotor moment of inertia.
- When the motor speed exceeds the rated speed, regenerative brake frequency is in inverse proportion to the square of (running speed/rated speed).
- Power supply voltage is AC230V (at 200V of the main voltage). If the supply voltage fluctuates, frequency is in inverse proportion to the square of (Running supply voltage/230) relative to the value in the table.
- When regeneration occurs continuously such cases as running speed frequently changes or vertical feeding, consult us or a dealer.

2. If the effective torque is within the rated torque, there is no limit in generative brake.
3. Consult us or a dealer if the load moment of inertia exceeds the specified value.
4. Specified releasing time is obtained with the use of surge absorber for brake (Z15D151 by Ishizuka Electronic or equivalent). ( ) represents the actually measured value using a diode (200V, 1A or equivalent)

Motor Specifications and Ratings 200V MGMA

3.0kW to 6.0kW Middle inertia, Medium Capacity

			AC200V					
Motor model		MGMA	302P1□	302S1□	452P1□	452S1□	602P1□	602S1□
Applicable driver	Model No.	A4 series	MFDDTB3A2				MGDDTC3B4	
		A4F series	MFDDTB3A2F				MGDDTC3B4F	
		A4P series	MFDDTB3A2P				——	
	Frame symbol		Frame F				Frame G	
Power supply capacity (kVA)			4.5		7.5		11	
Rated output (W)			3000		4500		6000	
Rated torque (N · m)			28.4		42.9		57.2	
Momentary Max. peak torque (N · m)			63.7		107		137	
Rated current (Arms)			24		33		47.0	
Max. current (Ao-p)			80.0		118		170.0	
Regenerative brake frequency (times/min) Note)1	Without option		No limit Note)2					
	DV0P4285 x 2		No limit Note)2				———	
	DV0P4285 x 4		———				No limit Note)2	
Rated rotational speed (r/min)			1000					
Max. rotational speed (r/min)			2000					
Moment of inertia of rotor ($x10^{-4}$ kg · m^2)	Without brake		55.7		80.9		99	
	With brake		61.7		86.9		108	
Recommended moment of inertia ratio of the load and the rotor Note)3			10 times or less					
Rotary encoder specifications			2500P/r Incremental	17-bit Absolute/ Incremental	2500P/r Incremental	17-bit Absolute/ Incremental	2500P/r Incremental	17-bit Absolute/ Incremental
	Resolution per single turn		10000	131072	10000	131072	10000	131072
Protective enclosure rating			IP65 (except rotating portion of output shaft and lead wire end)					
Environment	Ambient temperature		0 to 40˚C (free from freezing), Storage : –20 to +65˚C (Max.temperature guarantee 80˚C for 72 hours <Nomal temperature>)					
	Ambient humidity		85%RH or lower (free from condensing)					
	Installation location		Indoors (no direct sunlight), free from corrosive gas, inflammable gas, oil mist and dust					
	Altitude		1000m or lower					
	Vibration resistance		49m/s^2 or less				24m/s^2 or less	
Mass (kg), ( ) represents holding brake type			25.0 (28.5)		34.0 (39.5)		41.0 (45.0)	

Brake specifications (This brake will be released when it is energized. Do not use this for braking the motor in motion.)	
Static friction torque (N · m)	58.8
Engaging time (ms)	150
Releasing time (ms) Note)4	50 (130)
Exciting current (DC) (A)	1.40
Releasing voltage	DC2V or more
Exciting voltage	DC 24 V ±10%

Permissible load			
During assembly	Radial load P-direction (N)	2058	2058
	Thrust load A-direction (N)	980	980
	Thrust load B-direction (N)	1176	1176
During operation	Radial load P-direction (N)	1470	1764
	Thrust load A-direction (N)	490	588
	Thrust load B-direction (N)	490	588

For motor dimensions, refer to page A4-125, 128 and for the diver, refer to pages A4-24, 25, 50, 51 and 75.

Model designation MGMA series, 3.0kW to 6.0kW

e.g.) M G M A 3 0 2 S 1 G

Symbol	Type
MGMA	Middle inertia (3.0kW-6.0kW)

Voltage specifications

Symbol	Specifications
2	200V

Design order
1 : Standard

Motor structure

Symbol	Shaft		Holding brake		Oil seal	
	Round	Key-way	without	with	without	with
C	●		●			●
D	●			●		●
G		●	●			●
H		●		●		●

Products are standard stock items or build to order items. See index (page F31).

Motor rated output

Symbol	Rated output
30	3.0kW
45	4.5kW
60	6.0kW

Rotary encoder specifications

Symbol	Format	Pulse counts	Resolution	Wires
P	Incremental	2500P/r	10000	5
S	Absolute/Incremental	17-bit	131072	7

Torque characteristics at AC200V of power voltage

(Dotted line represents the torque at 10% less supply voltage.)

MGMA302□1□

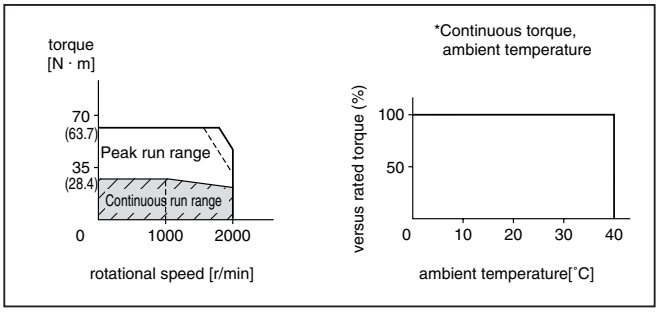

MGMA452□1□

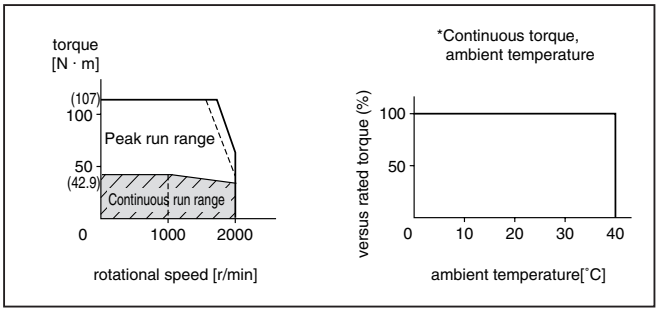

MGMA602□1□

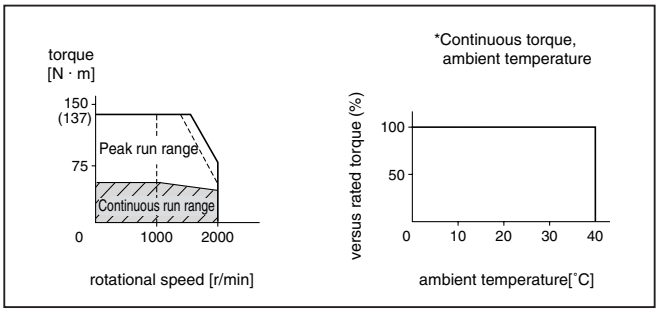

*When you lower the torque limit setup (Pr5E and 5F), running range at high speed might be lowered as well.

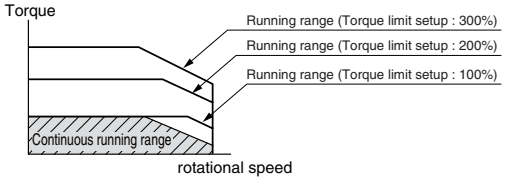

Radial load (P) direction

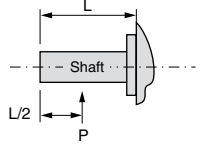

Thrust load (A, B) direction

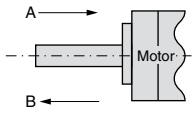

Note) 1. Regenerative brake frequency represents the frequency of the motor's stops from the rated speed with deceleration without load.
- If the load is connected, frequency will be defines as 1/(m+1), where m=load moment of inertia/rotor moment of inertia.
- When the motor speed exceeds the rated speed, regenerative brake frequency is in inverse proportion to the square of (running speed/rated speed).
- Power supply voltage is AC230V (at 200V of the main voltage). If the supply voltage fluctuates, frequency is in inverse proportion to the square of (Running supply voltage/230) relative to the value in the table.
- When regeneration occurs continuously such cases as running speed frequently changes or vertical feeding, consult us or a dealer.

2. If the effective torque is within the rated torque, there is no limit in generative brake.
3. Consult us or a dealer if the load moment of inertia exceeds the specified value.
4. Specified releasing time is obtained with the use of surge absorber for brake (Z15D151 by Ishizuka Electronic or equivalent). ( ) represents the actually measured value using a diode (200V, 1A or equivalent)

Motor Specifications and Ratings 200V MFMA

400W to 1.5kW Middle inertia, Medium Capacity

			AC200V			
Motor model		MFMA	042P1□	042S1□	152P1□	152S1□
Applicable driver	Model No.	A4 series	MCDDT3520		MDDDT5540	
		A4F series	MCDDT3520F		MDDDT5540F	
		A4P series	MCDDT3520P		MDDDT5540P	
	Frame symbol		Frame C		Frame D	
Power supply capacity (kVA)			0.9		2.3	
Rated output (W)			400		1500	
Rated torque (N · m)			1.9		7.15	
Momentary Max. peak torque (N · m)			5.3		21.5	
Rated current (Arms)			2.8		9.5	
Max. current (Ao-p)			12.0		40.0	
Regenerative brake frequency (times/min) Note)1	Without option		No limit Note)2		100	
	DV0P4283		No limit Note)2		———	
	DV0P4284		———		No limit Note)2	
Rated rotational speed (r/min)			2000			
Max. rotational speed (r/min)			3000			
Moment of inertia of rotor ($x10^{-4}$ kg · m^2)	Without brake		2.45		20.1	
	With brake		2.7		21.5	
Recommended moment of inertia ratio of the load and the rotor Note)3			10 times or less			
Rotary encoder specifications			2500P/r Incremental	17-bit Absolute/ Incremental	2500P/r Incremental	17-bit Absolute/ Incremental
	Resolution per single turn		10000	131072	10000	131072
Protective enclosure rating			IP65 (except rotating portion of output shaft and lead wire end)			
Environment	Ambient temperature		0 to 40˚C (free from freezing), Storage : –20 to +65˚C (Max.temperature guarantee 80˚C for 72 hours <Nomal temperature>)			
	Ambient humidity		85%RH or lower (free from condensing)			
	Installation location		Indoors (no direct sunlight), free from corrosive gas, inflammable gas, oil mist and dust			
	Altitude		1000m or lower			
	Vibration resistance		49m/s^2 or less			
Mass (kg), ( ) represents holding brake type			4.7 (6.7)		11.0 (14.0)	

Brake specifications (This brake will be released when it is energized. Do not use this for braking the motor in motion.)		
Static friction torque (N · m)	4.9	7.8
Engaging time (ms)	80	80
Releasing time (ms) Note)4	70	35
Exciting current (DC) (A)	0.59	0.83
Releasing voltage	DC2V or more	
Exciting voltage	DC 24 V ±10%	

Permissible load			
During assembly	Radial load P-direction (N)	980	
	Thrust load A-direction (N)	588	
	Thrust load B-direction (N)	686	
During operation	Radial load P-direction (N)	392	490
	Thrust load A-direction (N)	147	196
	Thrust load B-direction (N)	147	196

For motor dimensions, refer to page A4-127, and for the diver, refer to pages A4-23, 49 and 74.

Model designation MFMA series, 400W to 1.5kW

e.g.) M F M A 0 4 2 S 1 G

Symbol	Type
MFMA	Middle inertia (400W-1.5kW)

Voltage specifications

Symbol	Specifications
2	200V

Motor rated output

Symbol	Rated output
04	400W
15	1.5kW

Rotary encoder specifications

Symbol	Format	Pulse counts	Resolution	Wires
P	Incremental	2500P/r	10000	5
S	Absolute/Incremental	17-bit	131072	7

Design order
1 : Standard

Motor structure

Symbol	Shaft		Holding brake		Oil seal	
	Round	Key-way	without	with	without	with
C	●		●			●
D	●			●		●
G		●	●			●
H		●		●		●

Products are standard stock items or build to order items. See index (page F31).

Torque characteristics at AC200V of power voltage

(Dotted line represents the torque at 10% less supply voltage.)

MFMA042□1□

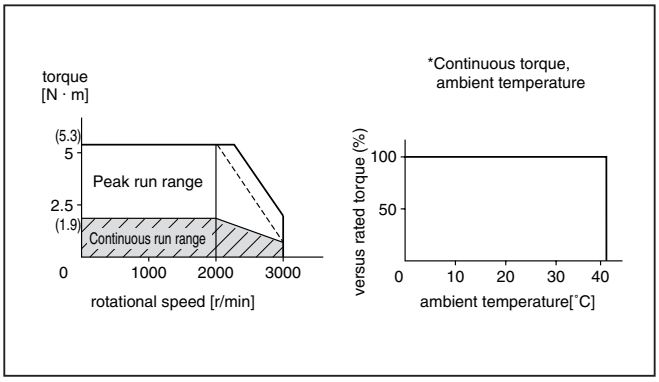

MFMA152□1□

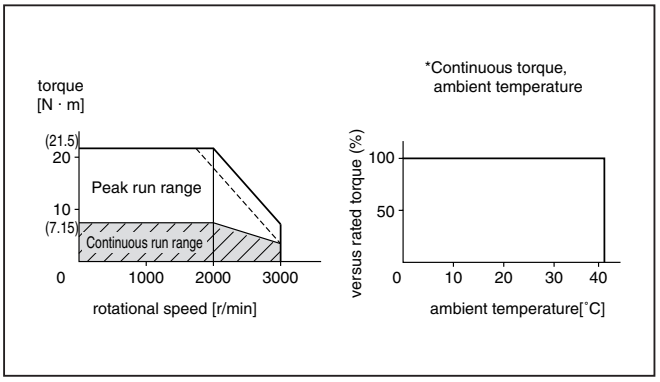

*When you lower the torque limit setup (Pr5E and 5F), running range at high speed might be lowered as well.

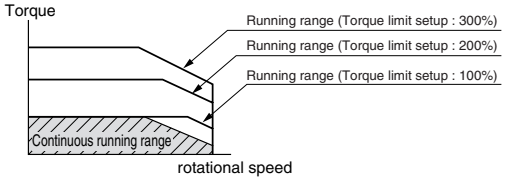

Radial load (P) direction

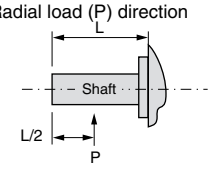

Thrust load (A, B) direction

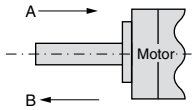

Note) 1. Regenerative brake frequency represents the frequency of the motor's stops from the rated speed with deceleration without load.
- If the load is connected, frequency will be defines as 1/(m+1), where m=load moment of inertia/rotor moment of inertia.
- When the motor speed exceeds the rated speed, regenerative brake frequency is in inverse proportion to the square of (running speed/rated speed).
- Power supply voltage is AC230V (at 200V of the main voltage). If the supply voltage fluctuates, frequency is in inverse proportion to the square of (Running supply voltage/230) relative to the value in the table.
- When regeneration occurs continuously such cases as running speed frequently changes or vertical feeding, consult us or a dealer.

2. If the effective torque is within the rated torque, there is no limit in generative brake.
3. Consult us or a dealer if the load moment of inertia exceeds the specified value.
4. Specified releasing time is obtained with the use of surge absorber for brake (Z15D151 by Ishizuka Electronic or equivalent). ( ) represents the actually measured value using a diode (200V, 1A or equivalent)

Motor Specifications and Ratings 200V MFMA

2.5kW to 4.5kW Middle inertia, Medium Capacity

			AC200V			
Motor model		MFMA	252P1□	252S1□	452P1□	452S1□
Applicable driver	Model No.	A4 series	MEDDT7364		MFDDTB3A2	
		A4F series	MEDDT7364F		MFDDTB3A2F	
		A4P series	MEDDT7364P		MFDDTB3A2P	
	Frame symbol		Frame E		Frame F	
Power supply capacity (kVA)			3.8		6.8	
Rated output (W)			2500		4500	
Rated torque (N · m)			11.8		21.5	
Momentary Max. peak torque (N · m)			30.4		54.9	
Rated current (Arms)			13.4		23.5	
Max. current (Ao-p)			57.0		100.0	
Regenerative brake frequency (times/min) Note)1	Without option		75		67	
	DV0P4285 x 2		No limit Note)2		375	
Rated rotational speed (r/min)			2000			
Max. rotational speed (r/min)			3000			
Moment of inertia of rotor ($x10^{-4}$ kg · m^2)	Without brake		41.3		72.3	
	With brake		45.3		78.5	
Recommended moment of inertia ratio of the load and the rotor Note)3			10 times or less			
Rotary encoder specifications			2500P/r Incremental	17-bit Absolute/ Incremental	2500P/r Incremental	17-bit Absolute/ Incremental
	Resolution per single turn		10000	131072	10000	131072
Protective enclosure rating			IP65 (except rotating portion of output shaft and lead wire end)			
Environment	Ambient temperature		0 to 40˚C (free from freezing), Storage : –20 to +65˚C (Max.temperature guarantee 80˚C for 72 hours <Nomal temperature>)			
	Ambient humidity		85%RH or lower (free from condensing)			
	Installation location		Indoors (no direct sunlight), free from corrosive gas, inflammable gas, oil mist and dust			
	Altitude		1000m or lower			
	Vibration resistance		49m/s^2 or less			
Mass (kg), ( ) represents holding brake type			14.8 (17.5)		19.9 (24.3)	

Brake specifications (This brake will be released when it is energized. Do not use this for braking the motor in motion.)		
Static friction torque (N · m)	21.6	31.4
Engaging time (ms)	150	150
Releasing time (ms) Note)4	100 (450)	100 (450)
Exciting current (DC) (A)	0.75	0.75
Releasing voltage	DC2V or more	
Exciting voltage	DC 24 V ±10%	

Permissible load		
During assembly	Radial load P-direction (N)	1862
	Thrust load A-direction (N)	686
	Thrust load B-direction (N)	686
During operation	Radial load P-direction (N)	784
	Thrust load A-direction (N)	294
	Thrust load B-direction (N)	294

For motor dimensions, refer to page A4-128, and for the diver, refer to pages A4-24, 50 and 75.

Model designation MFMA series, 2.5kW to 4.5kW

e.g.) M F M A 2 5 2 S 1 G

Symbol	Type
MFMA	Middle inertia (2.5kW-4.5kW)

Voltage specifications

Symbol	Specifications
2	200V

Design order
1 : Standard

Motor structure

Symbol	Shaft		Holding brake		Oil seal	
	Round	Key-way	without	with	without	with
C	●		●			●
D	●			●		●
G		●	●			●
H		●		●		●

Products are standard stock items or build to order items. See index (page F31).

Motor rated output

Symbol	Rated output
25	2.5kW
45	4.5kW

Rotary encoder specifications

Symbol	Format	Pulse counts	Resolution	Wires
P	Incremental	2500P/r	10000	5
S	Absolute/Incremental	17-bit	131072	7

Torque characteristics at AC200V of power voltage

(Dotted line represents the torque at 10% less supply voltage.)

MFMA252□1□

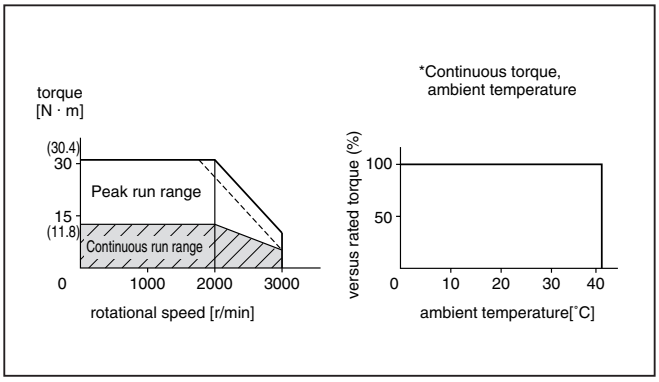

MFMA452□1□

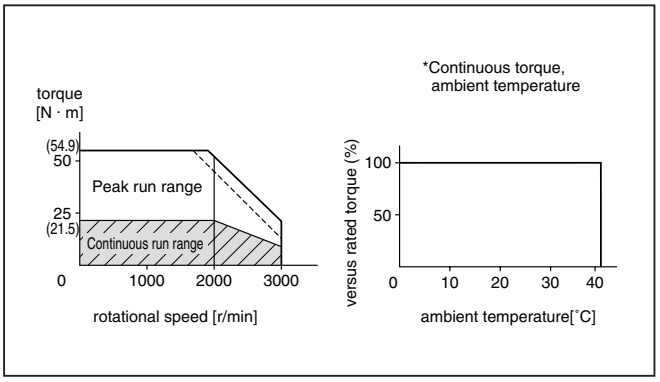

*When you lower the torque limit setup (Pr5E and 5F), running range at high speed might be lowered as well.

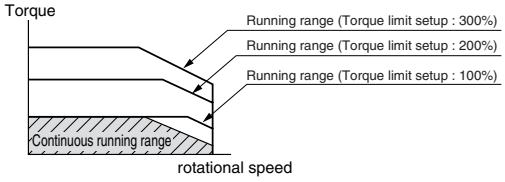

Radial load (P) direction

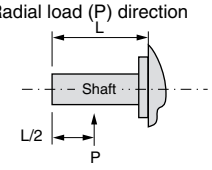

Thrust load (A, B) direction

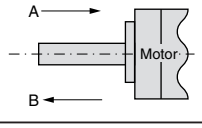

Note) 1. Regenerative brake frequency represents the frequency of the motor's stops from the rated speed with deceleration without load.
- If the load is connected, frequency will be defines as 1/(m+1), where m=load moment of inertia/rotor moment of inertia.
- When the motor speed exceeds the rated speed, regenerative brake frequency is in inverse proportion to the square of (running speed/rated speed).
- Power supply voltage is AC230V (at 200V of the main voltage). If the supply voltage fluctuates, frequency is in inverse proportion to the square of (Running supply voltage/230) relative to the value in the table.
- When regeneration occurs continuously such cases as running speed frequently changes or vertical feeding, consult us or a dealer.

2. If the effective torque is within the rated torque, there is no limit in generative brake.
3. Consult us or a dealer if the load moment of inertia exceeds the specified value.
4. Specified releasing time is obtained with the use of surge absorber for brake (Z15D151 by Ishizuka Electronic or equivalent). ( ) represents the actually measured value using a diode (200V, 1A or equivalent)

Motor Specifications and Ratings 200V MHMA

500W to 1.5kW High inertia, Medium Capacity

			AC200V					
Motor model		MHMA	052P1□	052S1□	102P1□	102S1□	152P1□	152S1□
Applicable driver	Model No.	A4 series	MCDDT3520		MDDDT3530		MDDDT5540	
		A4F series	MCDDT3520F		MDDDT3530F		MDDDT5540F	
		A4P series	MCDDT3520P		MDDDT3530P		MDDDT5540P	
	Frame symbol		Frame C		Frame D			
Power supply capacity (kVA)			1.1		1.8		2.3	
Rated output (W)			500		1000		1500	
Rated torque (N · m)			2.38		4.8		7.15	
Momentary Max. peak torque (N · m)			6.0		14.4		21.5	
Rated current (Arms)			3.2		5.6		9.4	
Max. current (Ao-p)			11.5		24.0		40.0	
Regenerative brake frequency (times/min) Note)1	Without option		No limit Note)2		33		25	
	DV0P4283		No limit Note)2		———			
	DV0P4284		———		No limit Note)2			
Rated rotational speed (r/min)			2000					
Max. rotational speed (r/min)			3000					
Moment of inertia of rotor ($\times 10^{-4}$ kg · m^2)	Without brake		14.0		26.0		42.9	
	With brake		15.2		27.2		44.1	
Recommended moment of inertia ratio of the load and the rotor Note)3			5 times or less					
Rotary encoder specifications			2500P/r Incremental	17-bit Absolute/ Incremental	2500P/r Incremental	17-bit Absolute/ Incremental	2500P/r Incremental	17-bit Absolute/ Incremental
	Resolution per single turn		10000	131072	10000	131072	10000	131072
Protective enclosure rating			IP65 (except rotating portion of output shaft and lead wire end)					
Environment	Ambient temperature		0 to 40˚C (free from freezing), Storage : –20 to +65˚C (Max.temperature guarantee 80˚C for 72 hours <Nomal temperature>)					
	Ambient humidity		85%RH or lower (free from condensing)					
	Installation location		Indoors (no direct sunlight), free from corrosive gas, inflammable gas, oil mist and dust					
	Altitude		1000m or lower					
	Vibration resistance		49m/s^2 or less					
Mass (kg), ( ) represents holding brake type			5.3 (6.9)		8.9 (9.5)		10.0 (11.6)	

Brake specifications (This brake will be released when it is energized. Do not use this for braking the motor in motion.)		
Static friction torque (N · m)	4.9	13.7
Engaging time (ms)	80	100
Releasing time (ms) Note)4	70 (200)	50 (130)
Exciting current (DC) (A)	0.59	0.79
Releasing voltage	DC2V or more	
Exciting voltage	DC 24 V ±10%	

Permissible load		
During assembly	Radial load P-direction (N)	980
	Thrust load A-direction (N)	588
	Thrust load B-direction (N)	686
During operation	Radial load P-direction (N)	490
	Thrust load A-direction (N)	196
	Thrust load B-direction (N)	196

For motor dimensions, refer to page A4-129, and for the diver, refer to pages A4-23, 49 and 74.

Model designation MHMA series, 500W to 1.5kW

e.g.) M H M A 0 5 2 S 1 G

Symbol	Type
MHMA	High inertia (500W-1.5kW)

Voltage specifications

Symbol	Specifications
2	200V

Motor rated output

Symbol	Rated output
05	0.5kW
10	1.0kW
15	1.5kW

Rotary encoder specifications

Symbol	Format	Pulse counts	Resolution	Wires
P	Incremental	2500P/r	10000	5
S	Absolute/Incremental	17-bit	131072	7

Design order
1 : Standard

Motor structure

Symbol	Shaft		Holding brake		Oil seal	
	Round	Key-way	without	with	without	with
C	●		●			●
D	●			●		●
G		●	●			●
H		●		●		●

Products are standard stock items or build to order items. See index (page F31).

Torque characteristics at AC200V of power voltage

(Dotted line represents the torque at 10% less supply voltage.)

MHMA052□1□

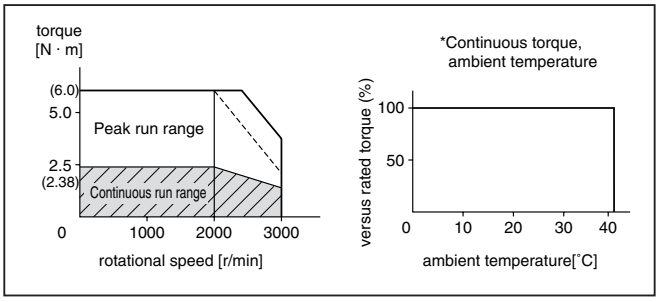

MHMA102□1□

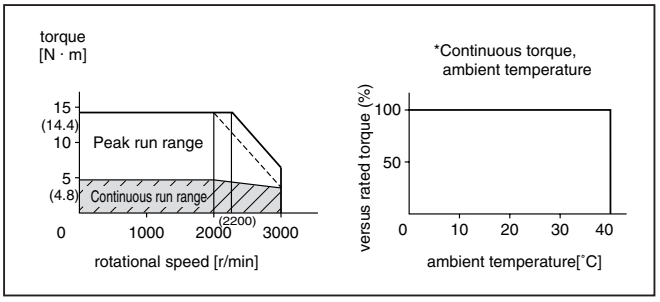

MHMA152□1□

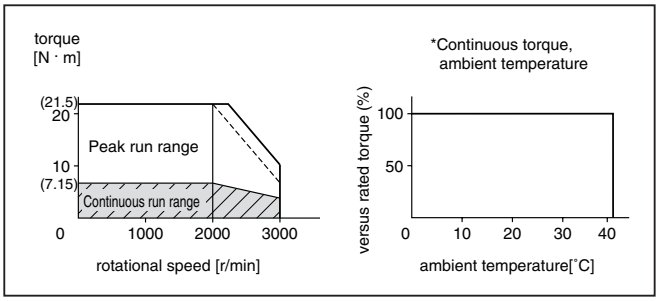

*When you lower the torque limit setup (Pr5E and 5F), running range at high speed might be lowered as well.

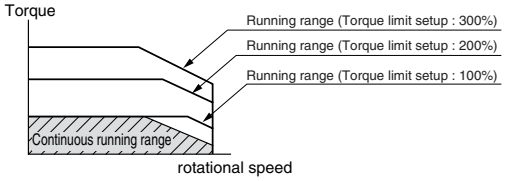

Radial load (P) direction

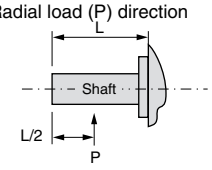

Thrust load (A, B) direction

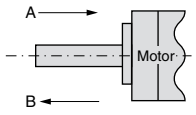

Note) 1. Regenerative brake frequency represents the frequency of the motor's stops from the rated speed with deceleration without load.
- If the load is connected, frequency will be defines as 1/(m+1), where m=load moment of inertia/rotor moment of inertia.
- When the motor speed exceeds the rated speed, regenerative brake frequency is in inverse proportion to the square of (running speed/rated speed).
- Power supply voltage is AC230V (at 200V of the main voltage). If the supply voltage fluctuates, frequency is in inverse proportion to the square of (Running supply voltage/230) relative to the value in the table.
- When regeneration occurs continuously such cases as running speed frequently changes or vertical feeding, consult us or a dealer.

2. If the effective torque is within the rated torque, there is no limit in generative brake.
3. Consult us or a dealer if the load moment of inertia exceeds the specified value.
4. Specified releasing time is obtained with the use of surge absorber for brake (Z15D151 by Ishizuka Electronic or equivalent). ( ) represents the actually measured value using a diode (200V, 1A or equivalent)

Motor Specifications and Ratings 200V MHMA

2.0kW to 5.0kW High inertia, Medium Capacity

			AC200V							
Motor model		MHMA	202P1□	202S1□	302P1□	302S1□	402P1□	402S1□	502P1□	502S1□
Applicable driver	Model No.	A4 series	MEDDT7364		MFDDTA390		MFDDTB3A2			
		A4F series	MEDDT7364F		MFDDTA390F		MFDDTB3A2F			
		A4P series	MEDDT7364P		MFDDTA390P		MFDDTB3A2P			
	Frame symbol		Frame E		Frame F					
Power supply capacity (kVA)			3.3		4.5		6.0		7.5	
Rated output (W)			2000		3000		4000		5000	
Rated torque (N · m)			9.54		14.3		18.8		23.8	
Momentary Max. peak torque (N · m)			28.5		42.9		56.4		71.4	
Rated current (Arms)			12.3		17.8		23.4		28.0	
Max. current (Ao-p)			52.0		76.0		100.0		120.0	
Regenerative brake frequency (times/min) Note)1	Without option		38		43		32		20	
	DV0P4285		100		———					
	DV0P4285 x 2		———		No limit Note)2		200		150	
Rated rotational speed (r/min)			2000							
Max. rotational speed (r/min)			3000							
Moment of inertia of rotor ($x10^{-4}$ kg · m^2)	Without brake		62.0		94.1		120.0		170.0	
	With brake		67.9		100.0		126.0		176.0	
Recommended moment of inertia ratio of the load and the rotor Note)3			5 times or less							
Rotary encoder specifications			2500P/r Incremental	17-bit Absolute/ Incremental	2500P/r Incremental	17-bit Absolute/ Incremental	2500P/r Incremental	17-bit Absolute/ Incremental	2500P/r Incremental	17-bit Absolute/ Incremental
	Resolution per single turn		10000	131072	10000	131072	10000	131072	10000	131072
Protective enclosure rating			IP65 (except rotating portion of output shaft and lead wire end)							
Environment	Ambient temperature		0 to 40˚C (free from freezing), Storage : –20 to +65˚C (Max.temperature guarantee 80˚C for 72 hours <Nomal temperature>)							
	Ambient humidity		85%RH or lower (free from condensing)							
	Installation location		Indoors (no direct sunlight), free from corrosive gas, inflammable gas, oil mist and dust							
	Altitude		1000m or lower							
	Vibration resistance		49m/s^2 or less							
Mass (kg), ( ) represents holding brake type			16.0 (19.5)		18.2 (21.7)		22.0 (25.5)		26.7 (30.2)	

Brake specifications (This brake will be released when it is energized. Do not use this for braking the motor in motion.)	
Static friction torque (N · m)	24.5
Engaging time (ms)	80
Releasing time (ms) Note)4	25 (200)
Exciting current (DC) (A)	1.30
Releasing voltage	DC2V or more
Exciting voltage	DC 24 V ±10%

Permissible load		
During assembly	Radial load P-direction (N)	1666
	Thrust load A-direction (N)	784
	Thrust load B-direction (N)	980
During operation	Radial load P-direction (N)	784
	Thrust load A-direction (N)	343
	Thrust load B-direction (N)	343

For motor dimensions, refer to page A4-130, and for the diver, refer to pages A4-24, 50 and 75.

Model designation MHMA series, 2.0kW to 5.0kW

e.g.) M H M A 2 0 2 S 1 G

Symbol	Type
MHMA	High inertia (2.0kW-5.0kW)

Voltage specifications

Symbol	Specifications
2	200V

Motor rated output

Symbol	Rated output
20	2.0kW
30	3.0kW
40	4.0kW
50	5.0kW

Rotary encoder specifications

Symbol	Format	Pulse counts	Resolution	Wires
P	Incremental	2500P/r	10000	5
S	Absolute/Incremental	17-bit	131072	7

Design order
1 : Standard

Motor structure

Symbol	Shaft		Holding brake		Oil seal	
	Round	Key-way	without	with	without	with
C	●		●			●
D	●			●		●
G		●	●			●
H		●		●		●

Products are standard stock items or build to order items. See index (page F31).

Torque characteristics at AC200V of power voltage

(Dotted line represents the torque at 10% less supply voltage.)

MHMA202□1□

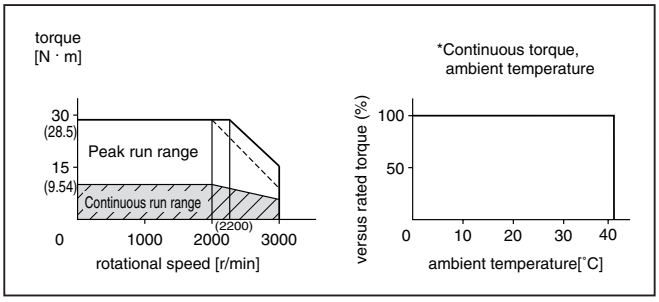

MHMA302□1□

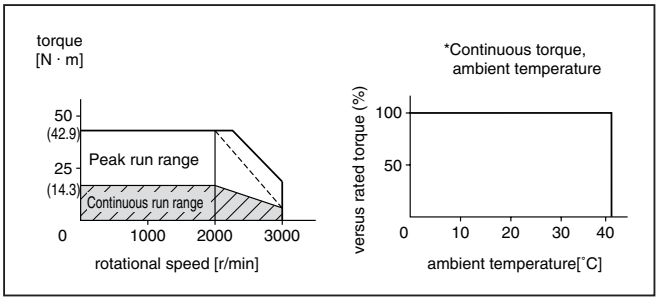

MHMA402□1□

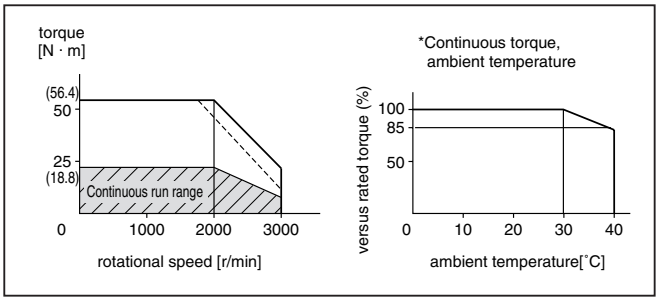

MHMA502□1□

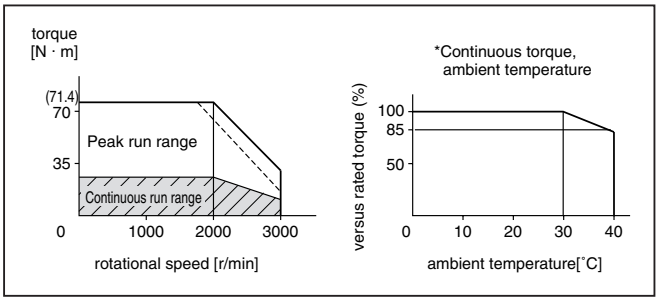

*When you lower the torque limit setup (Pr5E and 5F), running range at high speed might be lowered as well.

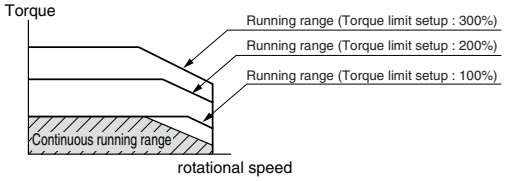

Radial load (P) direction

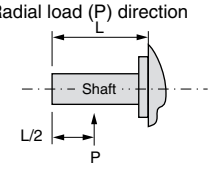

Thrust load (A, B) direction

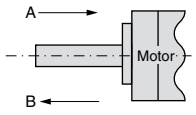

Note) 1. Regenerative brake frequency represents the frequency of the motor's stops from the rated speed with deceleration without load.
- If the load is connected, frequency will be defines as 1/(m+1), where m=load moment of inertia/rotor moment of inertia.
- When the motor speed exceeds the rated speed, regenerative brake frequency is in inverse proportion to the square of (running speed/rated speed).
- Power supply voltage is AC230V (at 200V of the main voltage). If the supply voltage fluctuates, frequency is in inverse proportion to the square of (Running supply voltage/230) relative to the value in the table.
- When regeneration occurs continuously such cases as running speed frequently changes or vertical feeding, consult us or a dealer.

2. If the effective torque is within the rated torque, there is no limit in generative brake.
3. Consult us or a dealer if the load moment of inertia exceeds the specified value.
4. Specified releasing time is obtained with the use of surge absorber for brake (Z15D151 by Ishizuka Electronic or equivalent). ( ) represents the actually measured value using a diode (200V, 1A or equivalent)

Motor Specifications and Ratings 200V MHMA

7.5kW High inertia, Large Capacity

			AC200V	
Motor model		MHMA	752P1□	752S1□
Applicable driver	Model No.	A4 series	MGDDTC3B4	
		A4F series	MGDDTC3B4F	
		A4P series	——	
	Frame symbol		Frame G	
Power supply capacity (kVA)			11	
Rated output (W)			7500	
Rated torque (N · m)			48	
Momentary Max. peak torque (N · m)			119	
Rated current (Arms)			46.6	
Max. current (Ao-p)			165.0	
Regenerative brake frequency (times/min) Note)1	Without option		0	
	DV0P4285 x 4		No limit Note)2	
Rated rotational speed (r/min)			1500	
Max. rotational speed (r/min)			3000	
Moment of inertia of rotor ($x10^{-4}$ kg · m^2)	Without brake		282	
	With brake		288	
Recommended moment of inertia ratio of the load and the rotor Note)3			5 times or less	
Rotary encoder specifications			2500P/r Incremental	17-bit Absolute/ Incremental
	Resolution per single turn		10000	131072
Protective enclosure rating			IP65 (except rotating portion of output shaft and lead wire end)	
Environment	Ambient temperature		0 to 40˚C (free from freezing), Storage : –20 to +65˚C (Max.temperature guarantee 80˚C for 72 hours <Nomal temperature>)	
	Ambient humidity		85%RH or lower (free from condensing)	
	Installation location		Indoors (no direct sunlight), free from corrosive gas, inflammable gas, oil mist and dust	
	Altitude		1000m or lower	
	Vibration resistance		24m/s^2 or less	
Mass (kg), ( ) represents holding brake type			43.5 (47.5)	

Brake specifications (This brake will be released when it is energized. Do not use this for braking the motor in motion.)	
Static friction torque (N · m)	58.8
Engaging time (ms)	150
Releasing time (ms) Note)4	50 (130)
Exciting current (DC) (A)	1.40
Releasing voltage	DC2V or more
Exciting voltage	DC 24 V ±10%

Permissible load		
During assembly	Radial load P-direction (N)	2058
	Thrust load A-direction (N)	980
	Thrust load B-direction (N)	1176
During operation	Radial load P-direction (N)	1176
	Thrust load A-direction (N)	490
	Thrust load B-direction (N)	490

For motor dimensions, refer to page A4-131, and for the diver, refer to pages A4-25 and 51.

Model designation MHMA series, 7.5kW

e.g.) M H M A 7 5 2 S 1 G

Symbol	Type
MHMA	High inertia (7.5kW)

Motor rated output

Symbol	Rated output
75	7.5kW

Voltage specifications

Symbol	Specifications
2	200V

Rotary encoder specifications

Symbol	Format	Pulse counts	Resolution	Wires
P	Incremental	2500P/r	10000	5
S	Absolute/Incremental	17-bit	131072	7

Design order
1 : Standard

Motor structure

Symbol	Shaft		Holding brake		Oil seal	
	Round	Key-way	without	with	without	with
C	●		●			●
D	●			●		●
G		●	●			●
H		●		●		●

Products are standard stock items or build to order items. See index (page F31).

Torque characteristics at AC200V of power voltage

(Dotted line represents the torque at 10% less supply voltage.)

MHMA752□1□

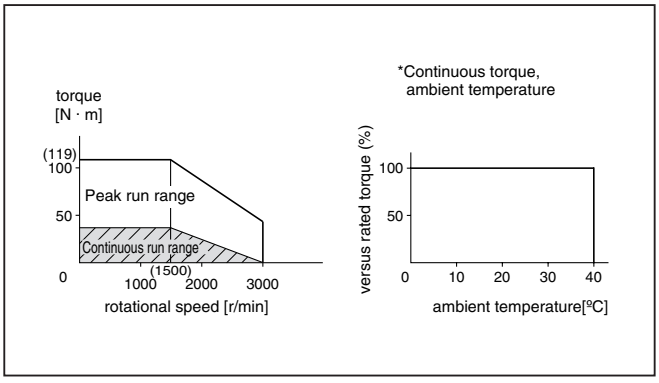

*When you lower the torque limit setup (Pr5E and 5F), running range at high speed might be lowered as well.

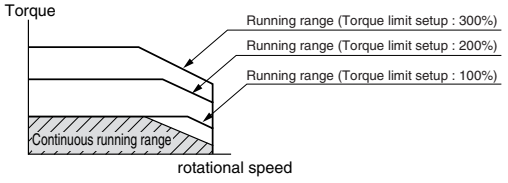

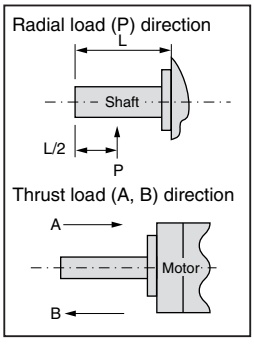

Note) 1. Regenerative brake frequency represents the frequency of the motor's stops from the rated speed with deceleration without load.
- If the load is connected, frequency will be defines as 1/(m+1), where m=load moment of inertia/rotor moment of inertia.
- When the motor speed exceeds the rated speed, regenerative brake frequency is in inverse proportion to the square of (running speed/rated speed).
- Power supply voltage is AC230V (at 200V of the main voltage). If the supply voltage fluctuates, frequency is in inverse proportion to the square of (Running supply voltage/230) relative to the value in the table.
- When regeneration occurs continuously such cases as running speed frequently changes or vertical feeding, consult us or a dealer.

2. If the effective torque is within the rated torque, there is no limit in generative brake.
3. Consult us or a dealer if the load moment of inertia exceeds the specified value.
4. Specified releasing time is obtained with the use of surge absorber for brake (Z15D151 by Ishizuka Electronic or equivalent). ( ) represents the actually measured value using a diode (200V, 1A or equivalent)

Motor Dimensions

MAMA 100W - 750W

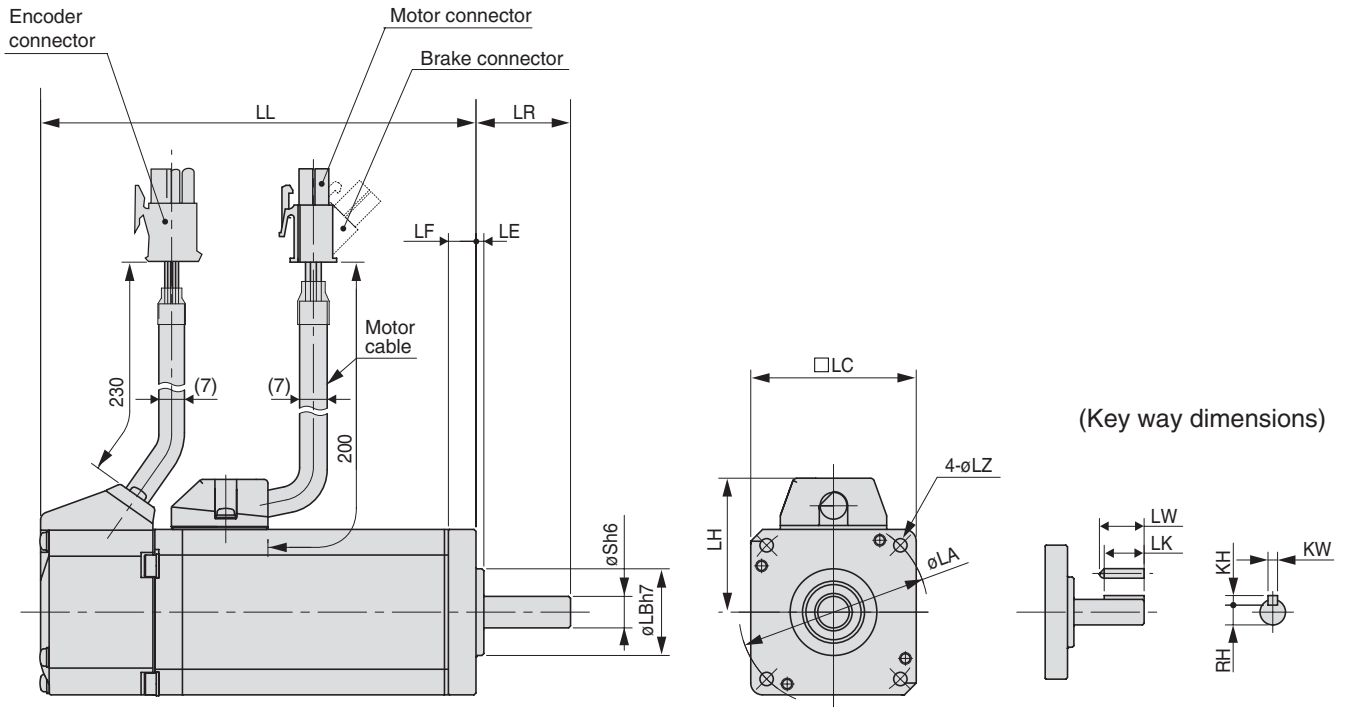

* Dimensions are subject to change without notice. Contact us or a dealer for the latest information

		MAMA series (Ultra low inertia) [unit: mm]							
Motor output		100W		200W		400W		750W	
Motor model	MAMA	012P1□	012S1□	022P1□	022S1□	042P1□	042S1□	082P1□	082S1□
Rotary encoder specifications		2500P/r Incremental	17-bit Absolute/ Incremental	2500P/r Incremental	17-bit Absolute/ Incremental	2500P/r Incremental	17-bit Absolute/ Incremental	2500P/r Incremental	17-bit Absolute/ Incremental
LL	Without brake	110.5	127	111	126	139	154	160	175
	With brake	138	154.5	139	154	167	182	192.5	207.5
LR		24		30		30		35	
S		8		11		14		19	
LA		48		70		70		90	
LB		22		50		50		70	
LC		42		60		60		80	
LD		——		——		——		——	
LE		2		3		3		3	
LF		7		7		7		8	
LG		——		——		——		——	
LH		34		43		43		53	
LZ		3.4		4.5		4.5		6	
Key way	LW	14		20		25		25	
	LK	12.5		18		22.5		22	
	KW	3h9		4h9		5h9		6h9	
	KH	3		4		5		6	
	RH	6.2		8.5		11		15.5	
Mass (kg)	Without brake	0.65	0.71	1.1	1.2	1.5	1.6	3.3	3.4
	With brake	0.85	0.91	1.5	1.6	1.9	2.0	4.0	4.1
Connector/Plug specifications		refer to page A4-148							

<Cautions> Reduce the moment of inertia ratio if high speed response operation is required.
Read the Instruction Manual carefully and understand all precautions and remarks before using the products.

MSMD 50W - 100W

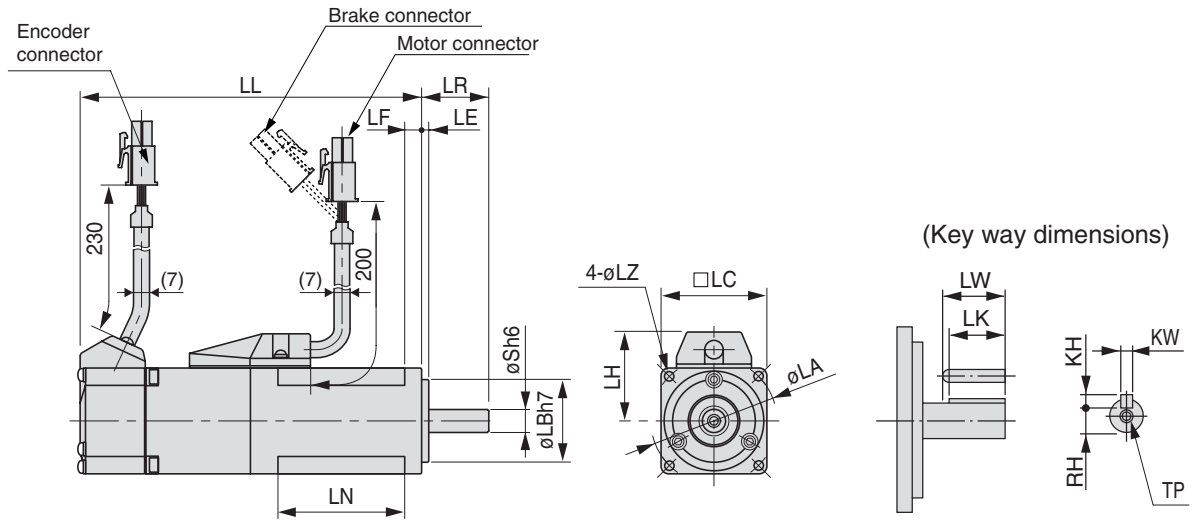

* Dimensions are subject to change without notice. Contact us or a dealer for the latest information

		MSMD series (Low inertia) [unit: mm]			
Motor output		50W		100W	
Motor model	MSMD	5A□P1□	5A□S1□	01□P1□	01□S1□
Rotary encoder specifications		2500P/r Incremental	17-bit Absolute/ Incremental	2500P/r Incremental	17-bit Absolute/ Incremental
LL	Without brake	72		92	
	With brake	102		122	
LR		25		25	
S		8		8	
LA		45		45	
LB		30		30	
LC		38		38	
LD		——		——	
LE		3		3	
LF		6		6	
LG		——		——	
LH		32		32	
LN		26.5		46.5	
LZ		3.4		3.4	
Key way	LW	14		14	
	LK	12.5		12.5	
	KW	3h9		3h9	
	KH	3		3	
	RH	6.2		6.2	
	TP	M3 x 6 (depth)		M3 x 6 (depth)	
Mass (kg)	Without brake	0.32		0.47	
	With brake	0.53		0.68	
Connector/Plug specifications		refer to page A4-148			

<Cautions> Reduce the moment of inertia ratio if high speed response operation is required.
Read the Instruction Manual carefully and understand all precautions and remarks before using the products.

Motor Dimensions

MSMD 200W - 750W

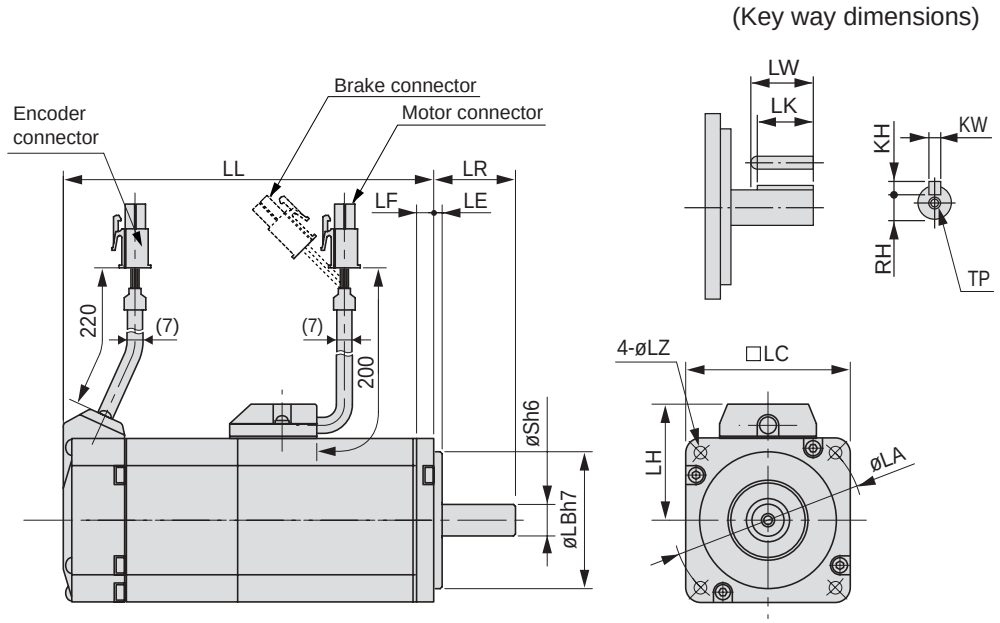

* Dimensions are subject to change without notice. Contact us or a dealer for the latest information

		MSMD series (Low inertia) [unit: mm]					
Motor output		200W		400W		750W	
Motor model	MSMD	02□P1□	02□S1□	04□P1□	04□S1□	08□P1□	08□S1□
Rotary encoder specifications		2500P/r Incremental	17-bit Absolute/ Incremental	2500P/r Incremental	17-bit Absolute/ Incremental	2500P/r Incremental	17-bit Absolute/ Incremental
LL	Without brake	79.5		99		112.2	
	With brake	116		135.5		149.2	
LR		30		30		35	
S		11		14		19	
LA		70		70		90	
LB		50		50		70	
LC		60		60		80	
LD		——		——		——	
LE		3		3		3	
LF		6.5		6.5		8	
LG		——		——		——	
LH		43		43		53	
LN		——		——		——	
LZ		4.5		4.5		6	
Key way	LW	20		25		25	
	LK	18		22.5		22	
	KW	4h9		5h9		6h9	
	KH	4		5		6	
	RH	8.5		11		15.5	
	TP	M4 x 8 (depth)		M5 x 10 (depth)		M5 x 10 (depth)	
Mass (kg)	Without brake	0.82		1.2		2.3	
	With brake	1.3		1.7		3.1	
Connector/Plug specifications		refer to page A4-148					

<Cautions> Reduce the moment of inertia ratio if high speed response operation is required.
Read the Instruction Manual carefully and understand all precautions and remarks before using the products.

MQMA 100W - 400W

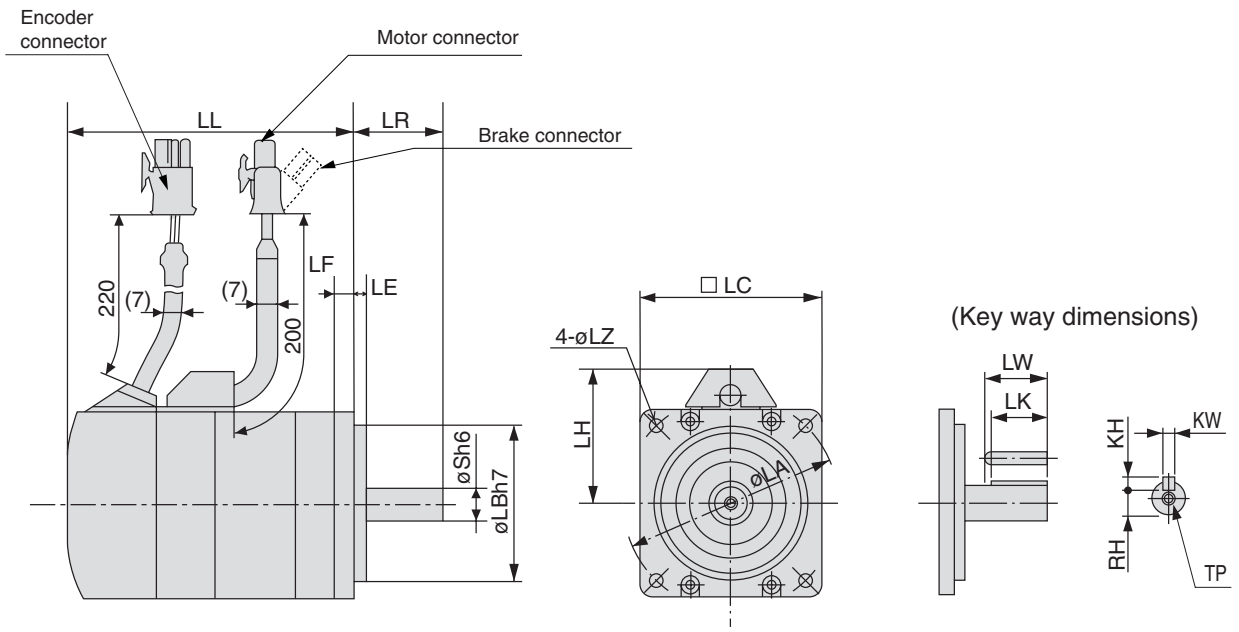

* Dimensions are subject to change without notice. Contact us or a dealer for the latest information

		MQMA series (Low inertia) [unit: mm]					
Motor output		100W		200W		400W	
Motor model	MQMA	01□P1□	01□S1□	02□P1□	02□S1□	04□P1□	04□S1□
Rotary encoder specifications		2500P/r Incremental	17-bit Absolute/ Incremental	2500P/r Incremental	17-bit Absolute/ Incremental	2500P/r Incremental	17-bit Absolute/ Incremental
LL	Without brake	60	87	67	94	82	109
	With brake	84	111	99.5	126.5	114.5	141.5
LR		25		30		30	
S		8		11		14	
LA		70		90		90	
LB		50		70		70	
LC		60		80		80	
LD		——		——		——	
LE		3		5		5	
LF		7		8		8	
LG		——		——		——	
LH		43		53		53	
LZ		4.5		5.5		5.5	
Key way	LW	14		20		25	
	LK	12.5		18		22.5	
	KW	3h9		4h9		5h9	
	KH	3		4		5	
	RH	6.2		8.5		11	
	TP	M3 x 6 (depth)		M4 x 8 (depth)		M5 x 10 (depth)	
Mass (kg)	Without brake	0.65	0.75	1.3	1.4	1.8	1.9
	With brake	0.90	1.00	2.0	2.1	2.5	2.6
Connector/Plug specifications		refer to page A4-148					

<Cautions> Reduce the moment of inertia ratio if high speed response operation is required.
Read the Instruction Manual carefully and understand all precautions and remarks before using the products.

Motor Dimensions

MSMA 1.0kW - 2.0kW

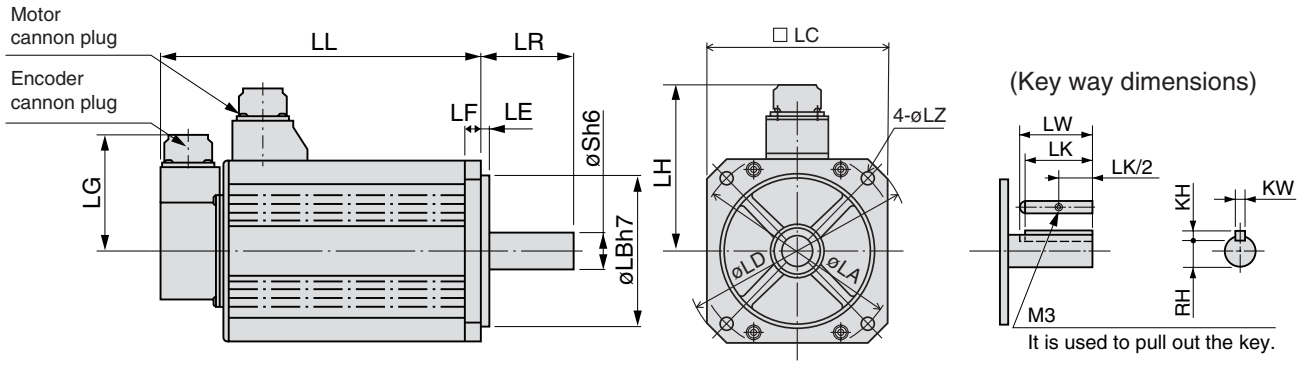

* Dimensions are subject to change without notice. Contact us or a dealer for the latest information

		MSMA series (Low inertia) [unit: mm]					
Motor output		1.0kW		1.5kW		2.0kW	
Motor model	MSMA	102P1□	102S1□	152P1□	152S1□	202P1□	202S1□
Rotary encoder specifications		2500P/r Incremental	17-bit Absolute/ Incremental	2500P/r Incremental	17-bit Absolute/ Incremental	2500P/r Incremental	17-bit Absolute/ Incremental
LL	Without brake	175	175	180	180	205	205
	With brake	200	200	205	205	230	230
LR		55		55		55	
S		19		19		19	
LA		100		115		115	
LB		80		95		95	
LC		90		100		100	
LD		120		135		135	
LE		3		3		3	
LF		7		10		10	
LG		84		84		84	
LH		98		103		103	
LZ		6.6		9		9	
Key way	LW	45		45		45	
	LK	42		42		42	
	KW	6h9		6h9		6h9	
	KH	6		6		6	
	RH	15.5		15.5		15.5	
Mass (kg)	Without brake	4.5	4.5	5.1	5.1	6.5	6.5
	With brake	5.1	5.1	6.5	6.5	7.9	7.9
Connector/Plug specifications		refer to page A4-142					

<Cautions> Reduce the moment of inertia ratio if high speed response operation is required.
Read the Instruction Manual carefully and understand all precautions and remarks before using the products.

MSMA 3.0kW - 5.0kW

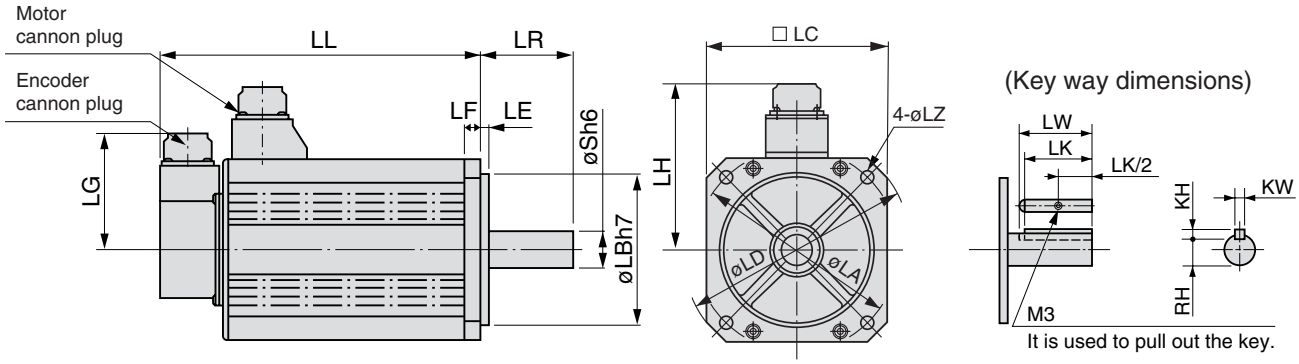

* Dimensions are subject to change without notice. Contact us or a dealer for the latest information

		MSMA series (Low inertia) [unit: mm]					
Motor output		3.0kW		4.0kW		5.0kW	
Motor model	MSMA	302P1□	302S1□	402P1□	402S1□	502P1□	502S1□
Rotary encoder specifications		2500P/r Incremental	17-bit Absolute/ Incremental	2500P/r Incremental	17-bit Absolute/ Incremental	2500P/r Incremental	17-bit Absolute/ Incremental
LL	Without brake	217	217	240	240	280	280
	With brake	242	242	265	265	305	305
LR		55		65		65	
S		22		24		24	
LA		130/145 (slot)		145		145	
LB		110		110		110	
LC		120		130		130	
LD		162		165		165	
LE		3		6		6	
LF		12		12		12	
LG		84		84		84	
LH		111		118		118	
LZ		9		9		9	
Key way	LW	45		55		55	
	LK	41		51		51	
	KW	8h9		8h9		8h9	
	KH	7		7		7	
	RH	18		20		20	
Mass (kg)	Without brake	9.3	9.3	12.9	12.9	17.3	17.3
	With brake	11.0	11.0	14.8	14.8	19.2	19.2
Connector/Plug specifications		refer to page A4-142					

<Cautions> Reduce the moment of inertia ratio if high speed response operation is required.
Read the Instruction Manual carefully and understand all precautions and remarks before using the products.

Motor Dimensions

MDMA 1.0kW - 1.5kW

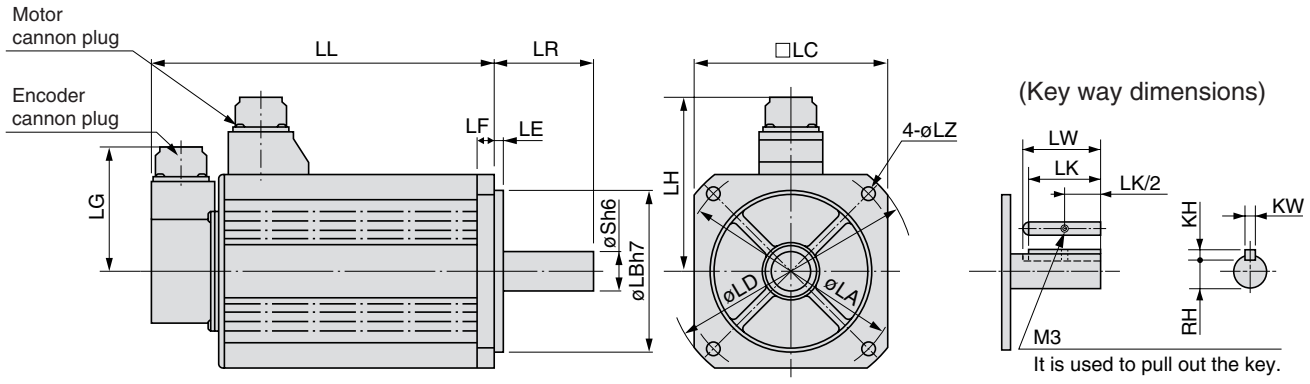

* Dimensions are subject to change without notice. Contact us or a dealer for the latest information

		MDMA series (Middle inertia) [unit: mm]			
Motor output		1.0kW		1.5kW	
Motor model	MDMA	102P1□	102S1□	152P1□	152S1□
Rotary encoder specifications		2500P/r Incremental	17-bit Absolute/ Incremental	2500P/r Incremental	17-bit Absolute/ Incremental
LL	Without brake	150	150	175	175
	With brake	175	175	200	200
LR		55		55	
S		22		22	
LA		145		145	
LB		110		110	
LC		130		130	
LD		165		165	
LE		6		6	
LF		12		12	
LG		84		84	
LH		118		118	
LZ		9		9	
Key way	LW	45		45	
	LK	41		41	
	KW	8h9		8h9	
	KH	7		7	
	RH	18		18	
Mass (kg)	Without brake	6.8	6.8	8.5	8.5
	With brake	8.7	8.7	10.1	10.1
Connector/Plug specifications		refer to page A4-142			

<Cautions> Reduce the moment of inertia ratio if high speed response operation is required.
Read the Instruction Manual carefully and understand all precautions and remarks before using the products.

MDMA 2.0kW - 3.0kW

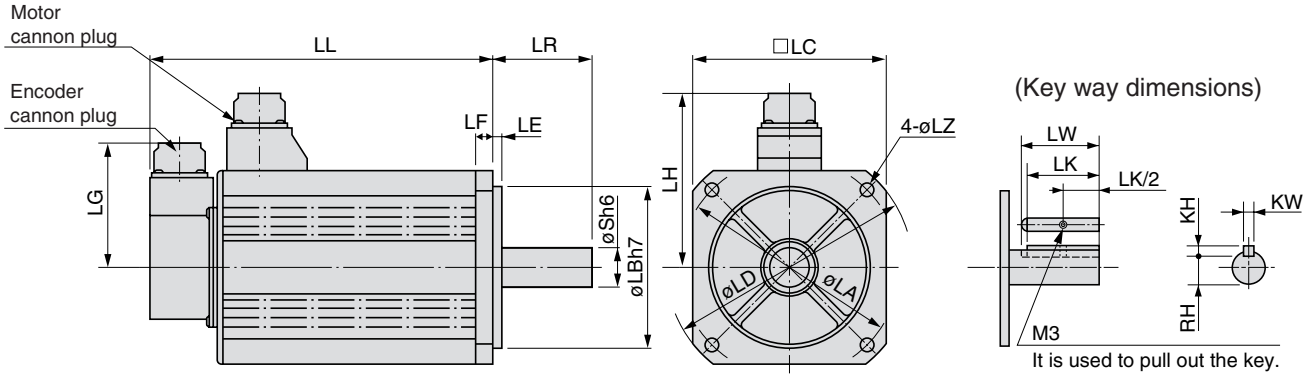

* Dimensions are subject to change without notice. Contact us or a dealer for the latest information

		MDMA series (Middle inertia) [unit: mm]			
Motor output		2.0kW		3.0kW	
Motor model	MDMA	202P1□	202S1□	302P1□	302S1□
Rotary encoder specifications		2500P/r Incremental	17-bit Absolute/ Incremental	2500P/r Incremental	17-bit Absolute/ Incremental
LL	Without brake	200	200	250	250
	With brake	225	225	275	275
LR		55		65	
S		22		24	
LA		145		145	
LB		110		110	
LC		130		130	
LD		165		165	
LE		6		6	
LF		12		12	
LG		84		84	
LH		118		118	
LZ		9		9	
Key way	LW	45		55	
	LK	41		51	
	KW	8h9		8h9	
	KH	7		7	
	RH	18		20	
Mass (kg)	Without brake	10.6	10.6	14.6	14.6
	With brake	12.5	12.5	16.5	16.5
Connector/Plug specifications		refer to page A4-142			

<Cautions> Reduce the moment of inertia ratio if high speed response operation is required.
Read the Instruction Manual carefully and understand all precautions and remarks before using the products.

Motor Dimensions

MDMA 4.0kW - 7.5kW

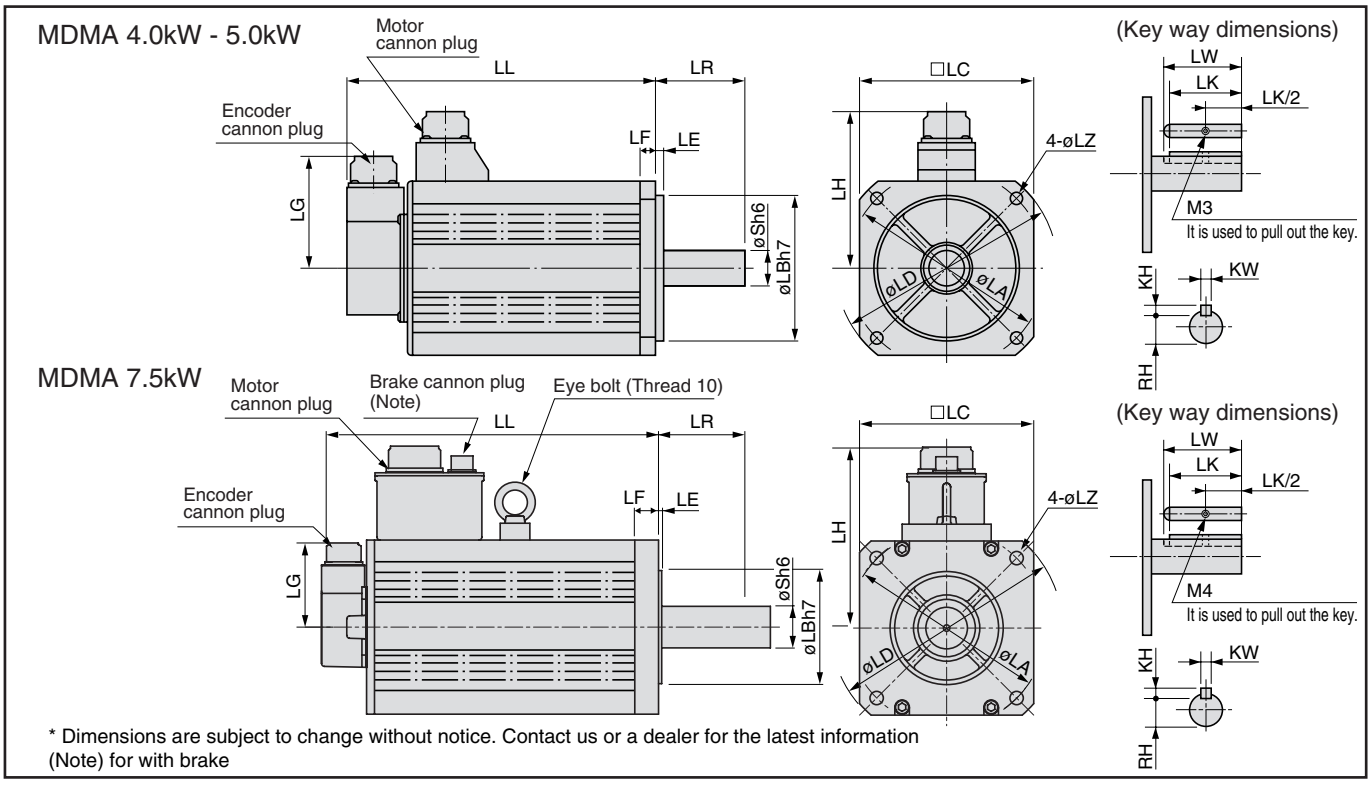

* Dimensions are subject to change without notice. Contact us or a dealer for the latest information
(Note) for with brake

		MDMA series (Middle inertia) [unit: mm]					
Motor output		4.0kW		5.0kW		7.5kW	
Motor model	MDMA	402P1□	402S1□	502P1□	502S1□	752P1□	752S1□
Rotary encoder specifications		2500P/r Incremental	17-bit Absolute/ Incremental	2500P/r Incremental	17-bit Absolute/ Incremental	2500P/r Incremental	17-bit Absolute/ Incremental
LL	Without brake	242	242	225	225	340.5	340.5
	With brake	267	267	250	250	380.5	380.5
LR		65		70		113	
S		28		35		42	
LA		165		200		200	
LB		130		114.3		114.3	
LC		150		176		176	
LD		190		233		233	
LE		3.2		3.2		3.2	
LF		18		18		24	
LG		84		84		84	
LH		128		143		183	
LZ		11		13.5		13.5	
Key way	LW	55		55		96	
	LK	51		50		90	
	KW	8h9		10h9		12h9	
	KH	7		8		8	
	RH	24		30		37	
Mass (kg)	Without brake	18.8	18.8	25.0	25.0	41.0	41.0
	With brake	21.3	21.3	28.5	28.5	45.0	45.0
Connector/Plug specifications		refer to page A4-142					

<Cautions> Reduce the moment of inertia ratio if high speed response operation is required.
Read the Instruction Manual carefully and understand all precautions and remarks before using the products.

MGMA 900W - 2.0kW

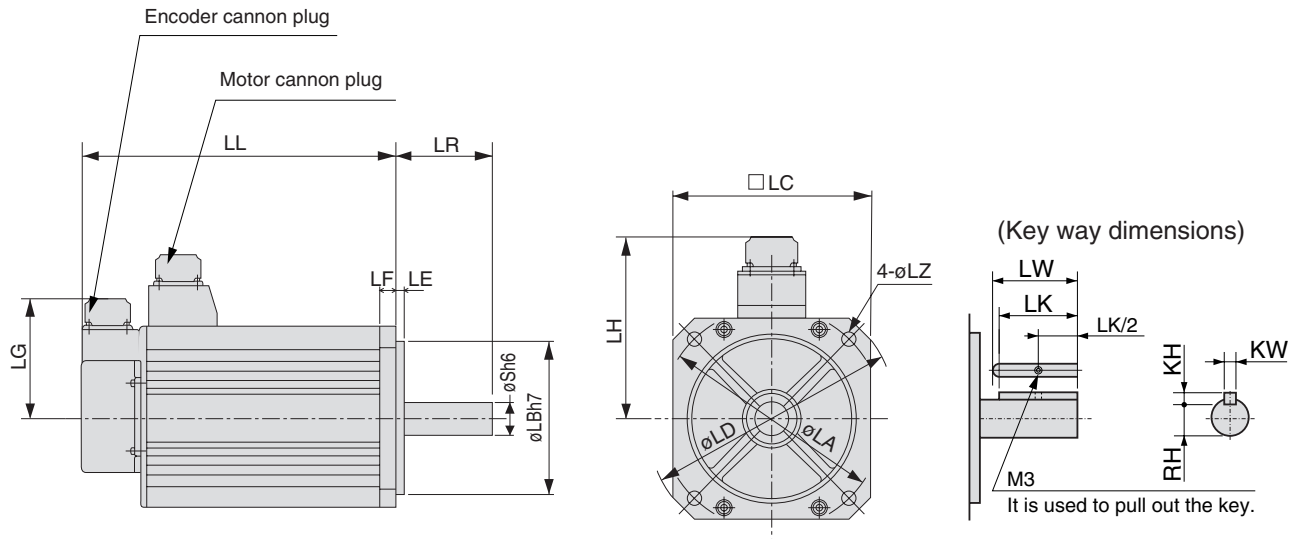

* Dimensions are subject to change without notice. Contact us or a dealer for the latest information

		MGMA series (Middle inertia) [unit: mm]			
Motor output		900W		2.0kW	
Motor model	MGMA	092P1□	092S1□	202P1□	202S1□
Rotary encoder specifications		2500P/r Incremental	17-bit Absolute/ Incremental	2500P/r Incremental	17-bit Absolute/ Incremental
LL	Without brake	175	175	182	182
	With brake	200	200	207	207
LR		70		80	
S		22		35	
LA		145		200	
LB		110		114.3	
LC		130		176	
LD		165		233	
LE		6		3.2	
LF		12		18	
LG		84		84	
LH		118		143	
LZ		9		13.5	
Key way	LW	45		55	
	LK	41		50	
	KW	8h9		10h9	
	KH	7		8	
	RH	18		30	
Mass (kg)	Without brake	8.5	8.5	17.5	17.5
	With brake	10.0	10.0	21.0	21.0
Connector/Plug specifications		refer to page A4-142			

<Cautions> Reduce the moment of inertia ratio if high speed response operation is required.
Read the Instruction Manual carefully and understand all precautions and remarks before using the products.

Motor Dimensions

MGMA 3.0kW - 4.5kW

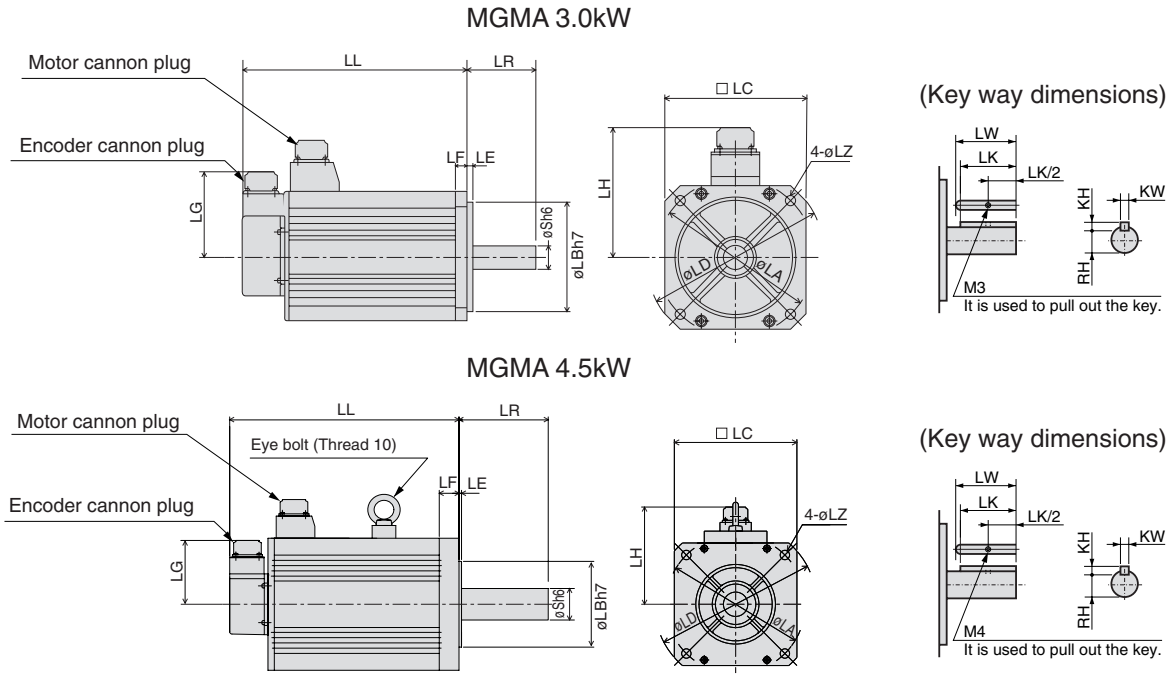

* Dimensions are subject to change without notice. Contact us or a dealer for the latest information

		MGMA series (Middle inertia) [unit: mm]			
Motor output		3.0kW		4.5kW	
Motor model	MGMA	302P1□	302S1□	452P1□	452S1□
Rotary encoder specifications		2500P/r Incremental	17-bit Absolute/ Incremental	2500P/r Incremental	17-bit Absolute/ Incremental
LL	Without brake	222	222	300.5	300.5
	With brake	271	271	337.5	337.5
LR		80		113	
S		35		42	
LA		200		200	
LB		114.3		114.3	
LC		176		176	
LD		233		233	
LE		3.2		3.2	
LF		18		24	
LG		84		84	
LH		143		143	
LZ		13.5		13.5	
Key way	LW	55		96	
	LK	50		90	
	KW	10h9		12h9	
	KH	8		8	
	RH	30		37	
Mass (kg)	Without brake	25.0	25.0	34.0	34.0
	With brake	28.5	28.5	39.5	39.5
Connector/Plug specifications		refer to page A4-142			

<Cautions> Reduce the moment of inertia ratio if high speed response operation is required.
Read the Instruction Manual carefully and understand all precautions and remarks before using the products.

MGMA 6.0kW

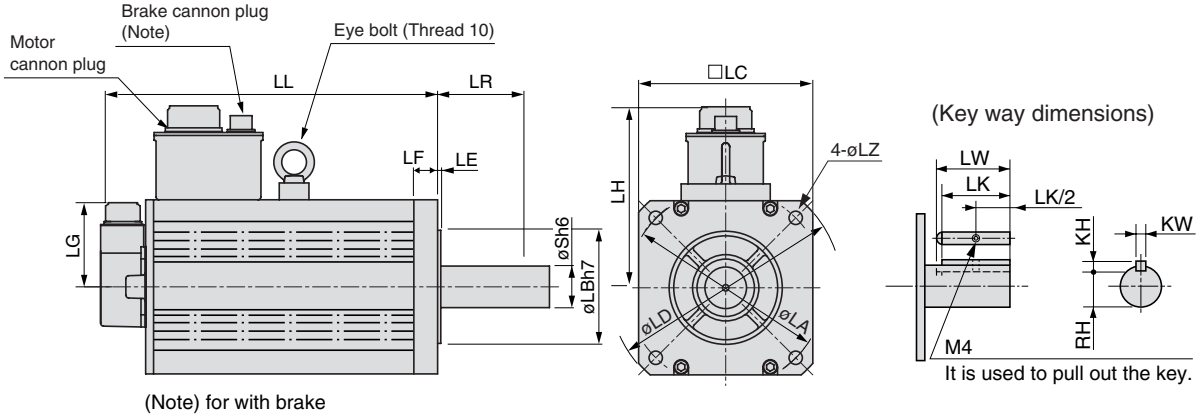

* Dimensions are subject to change without notice. Contact us or a dealer for the latest information

		MGMA series (Middle inertia) [unit: mm]	
Motor output		6.0kW	
Motor model	MGMA	602P1□	602S1□
Rotary encoder specifications		2500P/r Incremental	17-bit Absolute/ Incremental
LL	Without brake	340.5	340.5
	With brake	380.5	380.5
LR		113	
S		42	
LA		200	
LB		114.3	
LC		176	
LD		233	
LE		3.2	
LF		24	
LG		84	
LH		183	
LZ		13.5	
Key Way	LW	96	
	LK	90	
	KW	12h9	
	KH	8	
	RH	37	
Mass (kg)	Without brake	41.0	41.0
	With brake	45.0	45.0
Connector/Plug specifications		refer to page A4-142	

<Cautions> Reduce the moment of inertia ratio if high speed response operation is required.
Read the Instruction Manual carefully and understand all precautions and remarks before using the products.

Motor Dimensions

MFMA 400W - 1.5kW

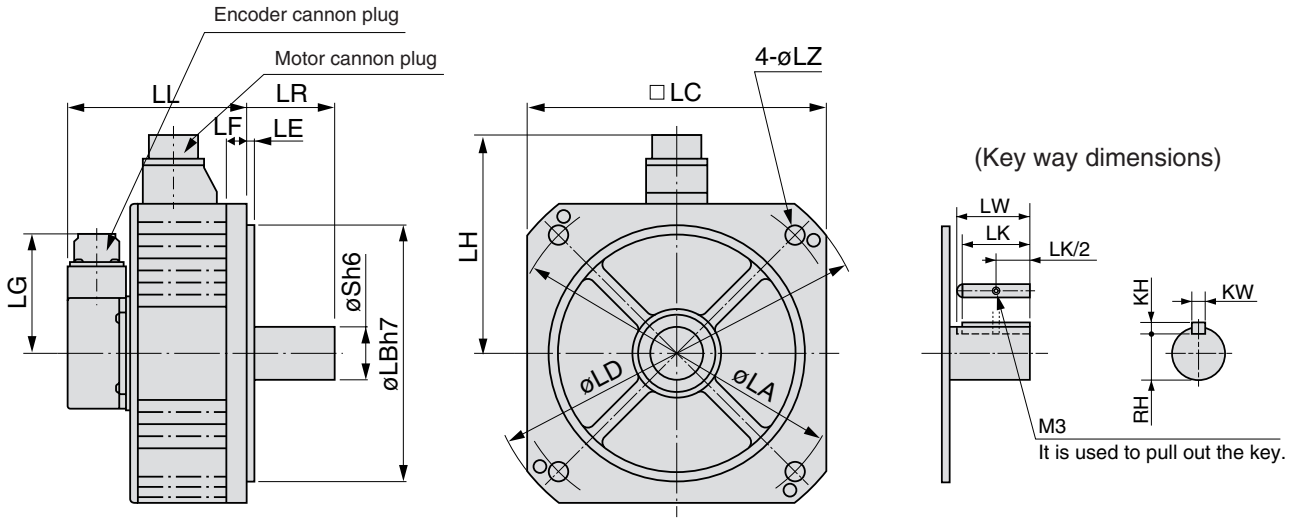

* Dimensions are subject to change without notice. Contact us or a dealer for the latest information

		MFMA series (Middle inertia) [unit: mm]			
Motor output		400W		1.5kW	
Motor model	MFMA	042P1□	042S1□	152P1□	152S1□
Rotary encoder specifications		2500P/r Incremental	17-bit Absolute/ Incremental	2500P/r Incremental	17-bit Absolute/ Incremental
LL	Without brake	120	120	145	145
	With brake	145	145	170	170
LR		55		65	
S		19		35	
LA		145		200	
LB		110		114.3	
LC		130		176	
LD		165		233	
LE		6		3.2	
LF		12		18	
LG		84		84	
LH		118		143	
LZ		9		13.5	
Key way	LW	45		55	
	LK	42		50	
	KW	6h9		10h9	
	KH	6		8	
	RH	15.5		30	
Mass (kg)	Without brake	4.7	4.7	11.0	11.0
	With brake	6.7	6.7	14.0	14.0
Connector/Plug specifications		refer to page A4-142			

<Cautions> Reduce the moment of inertia ratio if high speed response operation is required.
Read the Instruction Manual carefully and understand all precautions and remarks before using the products.

MFMA 2.5kW - 4.5kW

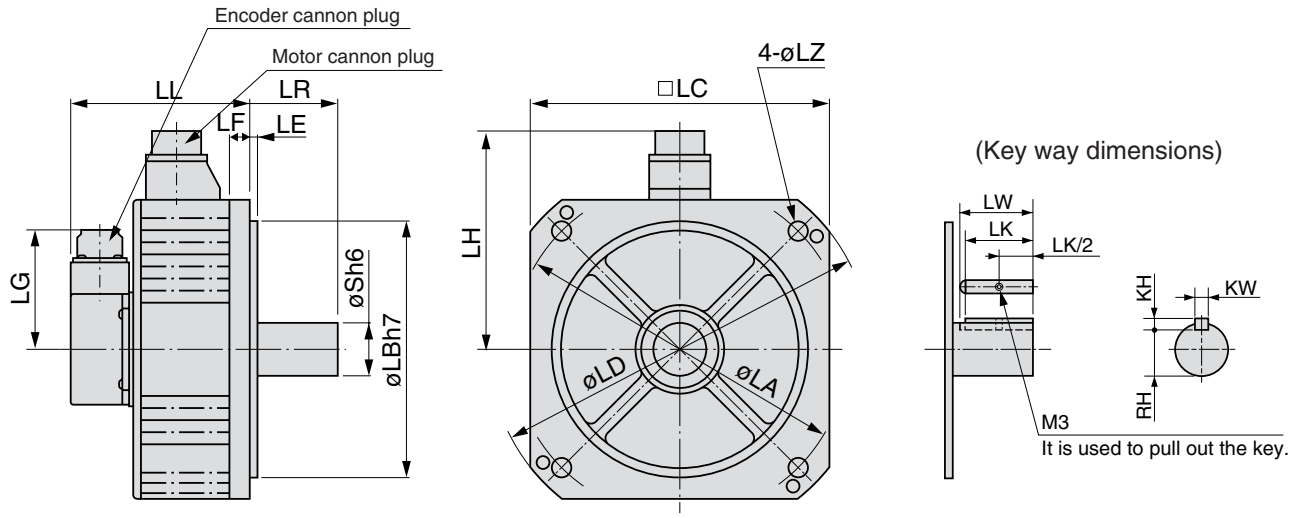

* Dimensions are subject to change without notice. Contact us or a dealer for the latest information

		MFMA series (Middle inertia) [unit: mm]			
Motor output		2.5kW		4.5kW	
Motor model	MFMA	252P1□	252S1□	452P1□	452S1□
Rotary encoder specifications		2500P/r Incremental	17-bit Absolute/ Incremental	2500P/r Incremental	17-bit Absolute/ Incremental
LL	Without brake	139	139	163	163
	With brake	166	166	194	194
LR		65		70	
S		35		35	
LA		235		235	
LB		200		200	
LC		220		220	
LD		268		268	
LE		4		4	
LF		16		16	
LG		84		84	
LH		164		164	
LZ		13.5		13.5	
Key way	LW	55		55	
	LK	50		50	
	KW	10h9		10h9	
	KH	8		8	
	RH	30		30	
Mass (kg)	Without brake	14.8	14.8	19.9	19.9
	With brake	17.5	17.5	24.3	24.3
Connector/Plug specifications		refer to page A4-142			

<Cautions> Reduce the moment of inertia ratio if high speed response operation is required.
Read the Instruction Manual carefully and understand all precautions and remarks before using the products.

Motor Dimensions

MHMA 500W - 1.5kW

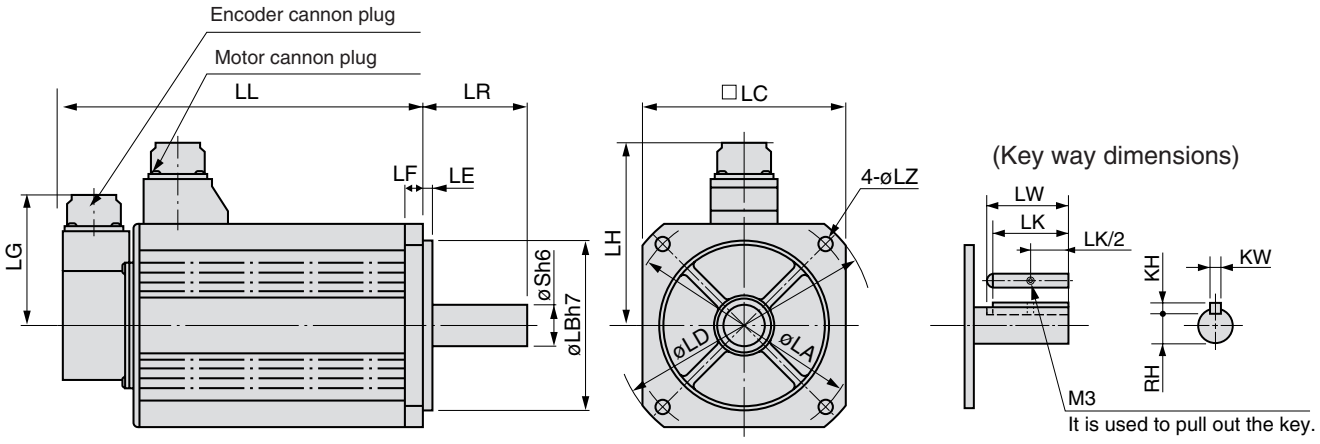

* Dimensions are subject to change without notice. Contact us or a dealer for the latest information

		MHMA series (High inertia) [unit: mm]					
Motor output		500W		1.0kW		1.5kW	
Motor model	MHMA	052P1□	052S1□	102P1□	102S1□	152P1□	152S1□
Rotary encoder specifications		2500P/r Incremental	17-bit Absolute/ Incremental	2500P/r Incremental	17-bit Absolute/ Incremental	2500P/r Incremental	17-bit Absolute/ Incremental
LL	Without brake	150	150	175	175	200	200
	With brake	175	175	200	200	225	225
LR		70		70		70	
S		22		22		22	
LA		145		145		145	
LB		110		110		110	
LC		130		130		130	
LD		165		165		165	
LE		6		6		6	
LF		12		12		12	
LG		84		84		84	
LH		118		118		118	
LZ		9		9		9	
Key way	LW	45		45		45	
	LK	41		41		41	
	KW	8h9		8h9		8h9	
	KH	7		7		7	
	RH	18		18		18	
Mass (kg)	Without brake	5.3	5.3	8.9	8.9	10.0	10.0
	With brake	6.9	6.9	9.5	9.5	11.6	11.6
Connector/Plug specifications		refer to page A4-142					

<Cautions> Reduce the moment of inertia ratio if high speed response operation is required.
Read the Instruction Manual carefully and understand all precautions and remarks before using the products.

MHMA 2.0kW - 5.0kW

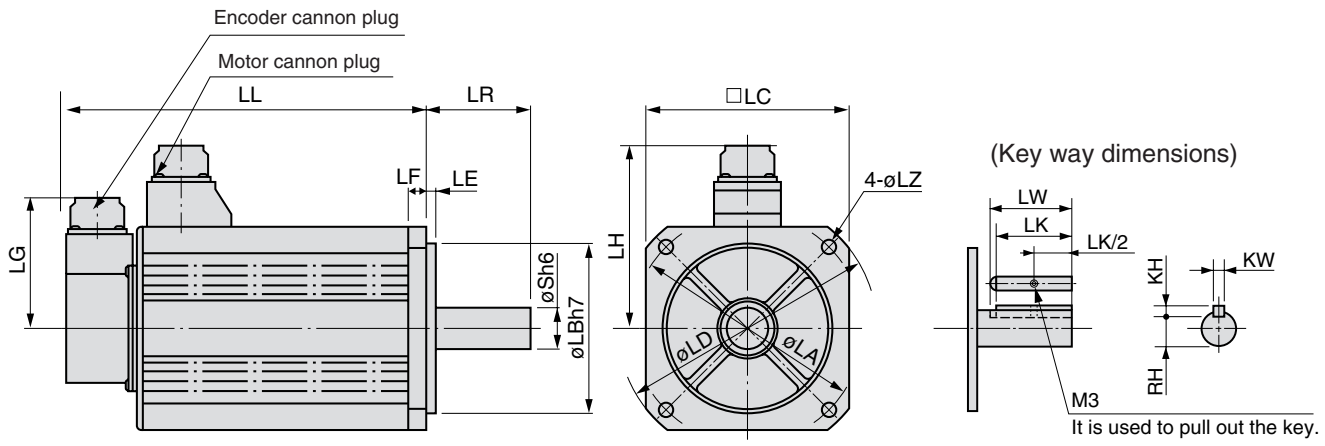

* Dimensions are subject to change without notice. Contact us or a dealer for the latest information

MHMA series (High inertia)

[unit: mm]

Motor output		2.0kW		3.0kW		4.0kW		5.0kW	
Motor model	MHMA	202P1□	202S1□	302P1□	302S1□	402P1□	402S1□	502P1□	502S1□
Rotary encoder specifications		2500P/r Incremental	17-bit Absolute/ Incremental	2500P/r Incremental	17-bit Absolute/ Incremental	2500P/r Incremental	17-bit Absolute/ Incremental	2500P/r Incremental	17-bit Absolute/ Incremental
LL	Without brake	190	190	205	205	230	230	255	255
	With brake	215	215	230	230	255	255	280	280
LR		80		80		80		80	
S		35		35		35		35	
LA		200		200		200		200	
LB		114.3		114.3		114.3		114.3	
LC		176		176		176		176	
LD		233		233		233		233	
LE		3.2		3.2		3.2		3.2	
LF		18		18		18		18	
LG		84		84		84		84	
LH		143		143		143		143	
LZ		13.5		13.5		13.5		13.5	
Key way	LW	55		55		55		55	
	LK	50		50		50		50	
	KW	10h9		10h9		10h9		10h9	
	KH	8		8		8		8	
	RH	30		30		30		30	
Mass (kg)	Without brake	16.0	16.0	18.2	18.2	22.0	22.0	26.7	26.7
	With brake	19.5	19.5	21.7	21.7	25.5	25.5	30.2	30.2
Connector/Plug specifications		refer to page A4-142							

<Cautions> Reduce the moment of inertia ratio if high speed response operation is required.
Read the Instruction Manual carefully and understand all precautions and remarks before using the products.

Motor Dimensions

MHMA 7.5kW

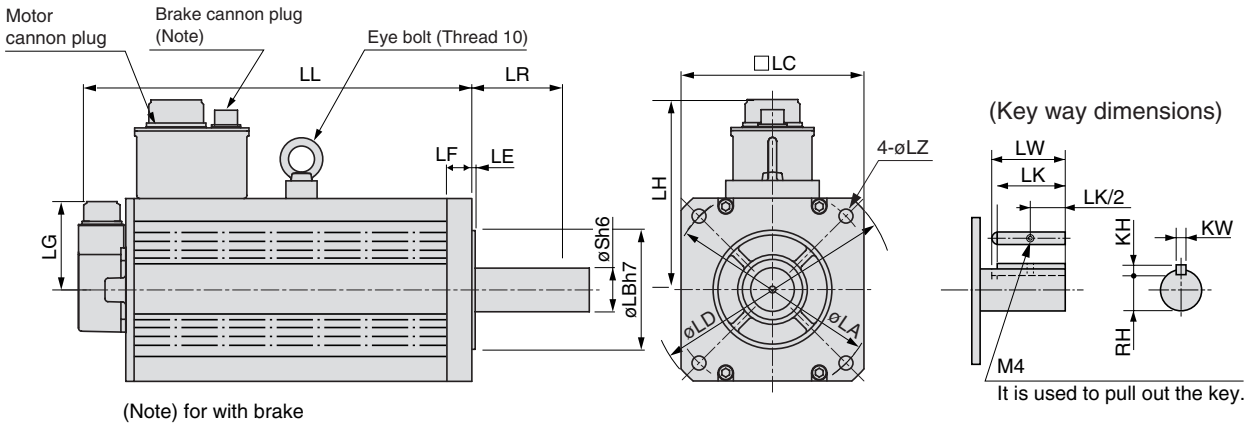

* Dimensions are subject to change without notice. Contact us or a dealer for the latest information

		MHMA series (High inertia) [unit: mm]	
Motor output		7.5kW	
Motor model	MHMA	752P1□	752S1□
Rotary encoder specifications		2500P/r Incremental	17-bit Absolute/ Incremental
LL	Without brake	380.5	380.5
	With brake	420.5	420.5
LR		113	
S		42	
LA		200	
LB		114.3	
LC		176	
LD		233	
LE		3.2	
LF		24	
LG		84	
LH		183	
LZ		13.5	
Key way	LW	96	
	LK	90	
	KW	12h9	
	KH	8	
	RH	37	
Mass (kg)	Without brake	43.5	43.5
	With brake	47.5	47.5
Connector/Plug specifications		refer to page A4-142	

<Cautions> Reduce the moment of inertia ratio if high speed response operation is required.
Read the Instruction Manual carefully and understand all precautions and remarks before using the products.

MINAS A4, A4F, A4P Series (MSMD) Motors with Gear Reducer

● Motor types with gear reducer

Reduction ratio	Motor output (W)				Type of reducer
	100	200	400	750	
1/5	●	●	●	●	For high precision
1/9	●	●	●	●	
1/15	●	●	●	●	
1/25	●	●	●	●	

Efficiency of the gear reducer show the following inclination in relation to output torque and rotational speed.

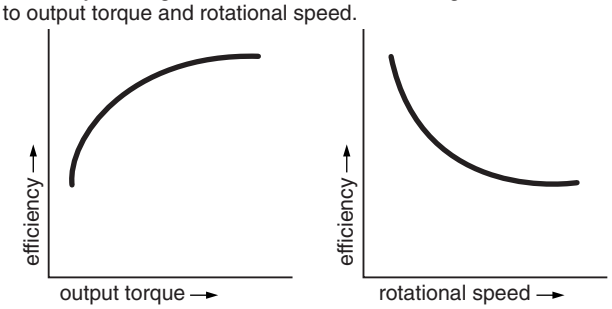

● Specifications of motor with gear reducer

Motor type		MSMD
Gear reducer	Backlash	3 minutes or smaller (initial value) at output shaft of the reducer
	Composition of gear	Planetary gear
	Gear efficiency	65% to 85%
	Rotational direction at output shaft (of reducer)	Same direction as the motor output shaft
	Composition of gear	Planetary gear
	Mounting method	Flange mounting
	Permissible moment of inertia of the load (conversion to the motor shaft)	10 times or smaller than rotor moment of inertia of the motor
	Protective structure	IP44 (at gear reducer)
Environment	Ambient temperature	0 to 40˚C
	Ambient humidity	85%RH (free from condensation) or less
	Vibration resistance	49m/s^2 or less (at motor frame)
	Impact resistance	98m/s^2 or less

● Table of motor specifications

Model	Motor	MSMD with gear reducer											
	Motor	Reduction ratio	Output	Rated speed	Max. speed	Rated torque	Peak max. torque	Moment of inertia (motor + reducer/converted to motor shaft)		Mass		Permissible radial load	Permissible thrust load
								w/o brake	w/ brake	w/o brake	w/ brake		
	(W)		(W)	(r/min)	(r/min)	(N · m)	(N · m)	J(x 10^{-4}kg · m^2)		(kg)		(N)	(N)
MSMD01□□□1N	100	1 / 5	75	600	1000	1.18	3.72	0.0910	0.0940	1.02	1.23	490	245
MSMD01□□□2N		1 / 9	80	333	555	2.25	6.86	0.0853	0.0883	1.02	1.23	588	294
MSMD01□□□3N		1 / 15	80	200	333	3.72	11.4	0.0860	0.0890	1.17	1.38	784	392
MSMD01□□□4N		1 / 25	80	120	200	6.27	19.0	0.0885	0.0915	2.17	2.38	1670	833
MSMD02□□□1N	200	1 / 5	170	600	1000	2.65	8.04	0.258	0.278	1.54	2.02	490	245
MSMD02□□□2N		1 / 9	132	333	555	3.72	11.3	0.408	0.428	2.52	3.00	1180	588
MSMD02□□□3N		1 / 15	132	200	333	6.27	18.8	0.440	0.460	2.52	3.00	1470	735
MSMD02□□□4N		1 / 25	140	120	200	11.1	33.3	0.428	0.448	2.52	3.00	1670	833
MSMD04□□□1N	400	1 / 5	340	600	1000	5.39	16.2	0.623	0.643	2.9	3.4	980	490
MSMD04□□□2N		1 / 9	332	333	555	9.51	28.5	0.528	0.548	2.9	3.4	1180	588
MSMD04□□□3N		1 / 15	332	200	333	15.8	47.5	0.560	0.580	3.3	3.8	1470	735
MSMD04□□□4N		1 / 25	332	120	200	26.4	79.2	0.560	0.580	4.4	4.9	2060	1030
MSMD082□□1N	750	1 / 5	672	600	900	10.7	32.1	1.583	1.683	4.4	5.2	980	490
MSMD082□□2N		1 / 9	635	333	500	18.2	54.7	1.520	1.620	5.7	6.5	1470	735
MSMD082□□3N		1 / 15	635	200	300	30.4	91.2	1.570	1.670	6.1	6.9	1760	882
MSMD082□□4N		1 / 25	635	120	180	50.7	152	1.520	1.620	6.1	6.9	2650	1320

For dimensions, refer to page, A4-136.

Ratings and Specifications of Motor with Gear Reducer

● Model No. designation

e.g.) M S M D 0 1 1 P 3 1 N

Symbol	Type
MSMD	Low inertia (100-750W)

Motor rated output

Symbol	Rated output
01	100W
02	200W
04	400W
08	750W

Voltage specifications

Symbol	Specifications
1	100V
2	200V

Rotary encoder specifications

Symbol	Format	Pulse counts	Resolution	Wire
P	Incremental	2500P/r	10000	5
S	Absolute/Incremental	17-bit	131072	7

Motor types with gear reducer

Symbol	Reduction ratio	Motor output (W)				Type of reducer
		100	200	400	750	
1N	1/ 5	●	●	●	●	For high precision
2N	1/ 9	●	●	●	●	
3N	1/15	●	●	●	●	
4N	1/25	●	●	●	●	

Motor structure

Symbol	Shaft	Holding brake	
	Key way	without	with
3	●	●	
4	●		●

● The combination of the driver and the motor

Combination with driver		100V		200V			
Encoder	Motor output	Part No. of motor with reducer	Single phase, 100V Part No. of driver	Part No. of motor with reducer	Single phase, 200V Part No. of driver	Part No. of motor with reducer	3-phase, 200V Part No. of driver
2500P/r Incremental	100W	MSMD011P□□N	MADDT1107	MSMD012P□□N	MADDT1205	–	–
			MADDT1107F		MADDT1205F		
			MADDT1107P		MADDT1205P		
	200W	MSMD021P□□N	MBDDT2110	MSMD022P□□N	MADDT1207	–	–
			MBDDT2110F		MADDT1207F		
			MBDDT2110P		MADDT1207P		
	400W	MSMD041P□□N	MCDDT3120	MSMD042P□□N	MBDDT2210	–	–
			MCDDT3120F		MBDDT2210F		
			MCDDT3120P		MBDDT2210P		
	750W	–	–	MSMD082P□□N	MCDDT3520	MSMD082P□□N	MCDDT3520
					MCDDT3520F		MCDDT3520F
					MCDDT3520P		MCDDT3520P
17-bit Absolute	100W	MSMD011S□□N	MADDT1107	MSMD012S□□N	MADDT1205	–	–
			MADDT1107F		MADDT1205F		
			MADDT1107P		MADDT1205P		
	200W	MSMD021S□□N	MBDDT2110	MSMD022S□□N	MADDT1207	–	–
			MBDDT2110F		MADDT1207F		
			MBDDT2110P		MADDT1207P		
	400W	MSMD041S□□N	MCDDT3120	MSMD042S□□N	MBDDT2210	–	–
			MCDDT3120F		MBDDT2210F		
			MCDDT3120P		MBDDT2210P		
	750W	–	–	MSMD082S□□N	MCDDT3520	MSMD082S□□N	MCDDT3520
					MCDDT3520F		MCDDT3520F
					MCDDT3520P		MCDDT3520P

For dimensions, refer to pages, A4-22, 23, 48, 49, 73 and 74.
* In the driver model number, the upper row is A4 series, the middle row is A4F series and the lower is A4P series.

Torque Characteristics of Motor with Gear Reducer

● For high precision (MSMD Series 100W - 750W)

Supply voltage to driver	Reduction ratio / Motor output	1/5	1/9	1/15	1/25
100V	100W	MSMD011□□1N 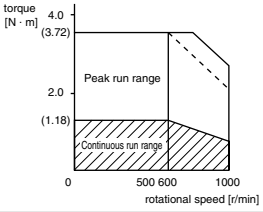	MSMD011□□2N 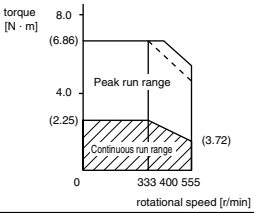	MSMD011□□3N 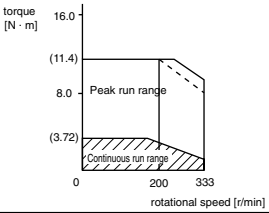	MSMD011□□4N 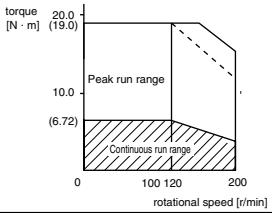
	200W	MSMD021□□1N 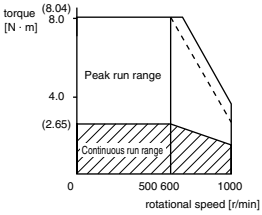	MSMD021□□2N 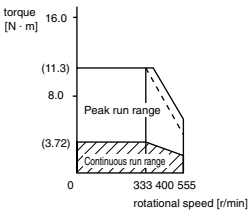	MSMD021□□3N 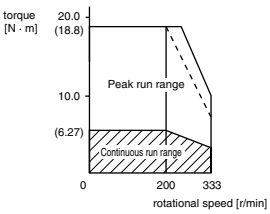	MSMD021□□4N 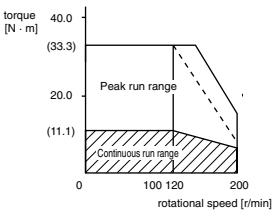
	400W	MSMD041□□1N 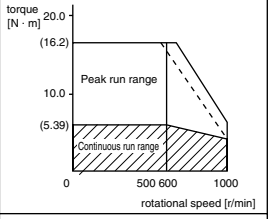	MSMD041□□2N 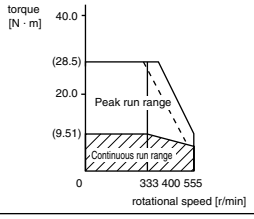	MSMD041□□3N 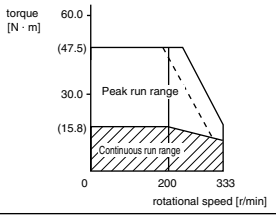	MSMD041□□4N 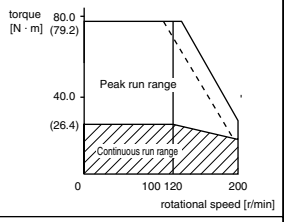
200V	100W	MSMD012□□1N 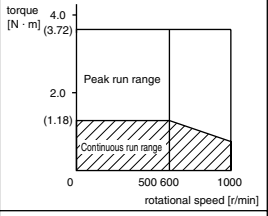	MSMD012□□2N 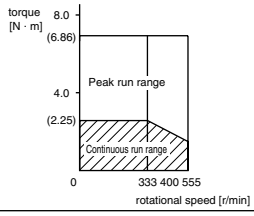	MSMD012□□3N 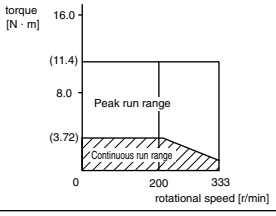	MSMD012□□4N 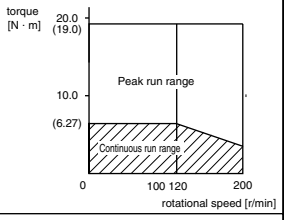
	200W	MSMD022□□1N 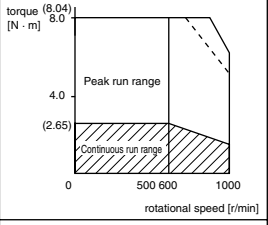	MSMD022□□2N 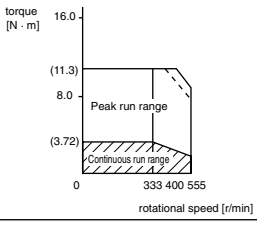	MSMD022□□3N 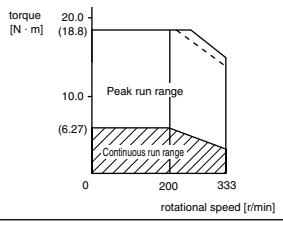	MSMD022□□4N 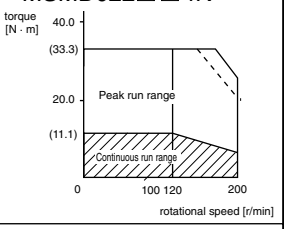
	400W	MSMD042□□1N 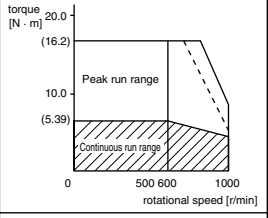	MSMD042□□2N 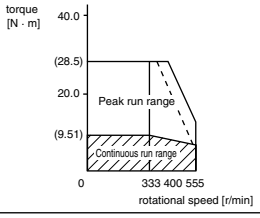	MSMD042□□3N 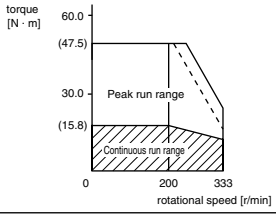	MSMD042□□4N 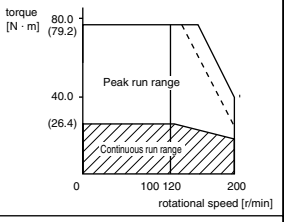
	750W	MSMD082□□1N 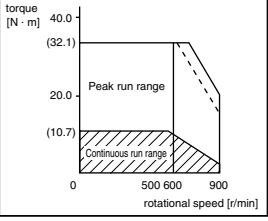	MSMD082□□2N 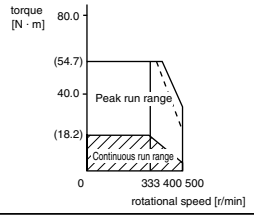	MSMD082□□3N 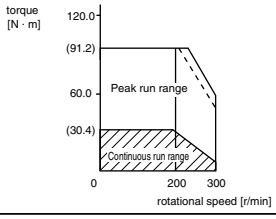	MSMD082□□4N 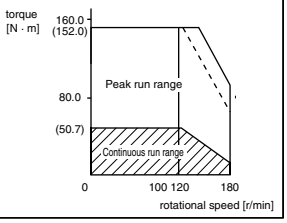

Dotted line represents the torque at 10% less supply voltage.

Dimensions of Motor with Gear Reducer

● MSMD series with gear reducer

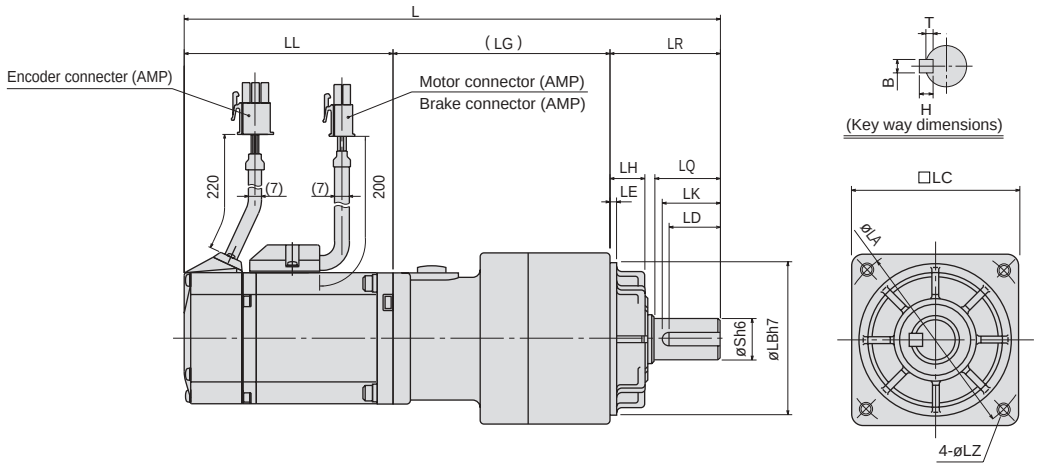

● 2500P/r encoder
● 17-bit encoder

[unit: mm]

Model	Motor output	Reduction rati0	L	LL	LR	LQ	LC	LB	LA	S	LH	LZ	LK	(LG)	LE	Key way BXHXLD	T
MSMD01□□□1N	100W	1 / 5	191.5	92	32	20	52	50	60	12	10	M5 (Depth : 12)	18	67.5	3	4 x 4 x 16	2.5
			221.5	122													
MSMD01□□□2N		1 / 9	191.5	92													
			221.5	122													
MSMD01□□□3N		1/15	202	92										78			
			232	122													
MSMD01□□□4N		1/25	234	92	50	30	78	70	90	19	17	M6 (Depth : 20)	26	92		6 x 6 x 22	3.5
			264	122													
MSMD02□□□1N	200W	1 / 5	184	79.5	32	20	52	50	60	12	10	M5 (Depth : 12)	18	72.5		4 x 4 x 16	2.5
			220.5	116													
MSMD02□□□2N		1 / 9	219	79.5	50	30	78	70	90	19	17	M6 (Depth : 20)	26	89.5		6 x 6 x 22	3.5
			255.5	116													
MSMD02□□□3N		1/15	229.5	79.5										100			
			266	116													
MSMD02□□□4N		1/25	229.5	79.5													
			266	116													
MSMD04□□□1N	400W	1 / 5	238.5	99										89.5			
			275	135.5													
MSMD04□□□2N		1 / 9	238.5	99													
			275	135.5													
MSMD04□□□3N		1/15	249	99										100			
			285.5	135.5													
MSMD04□□□4N		1/25	264	99	61	40	98	90	115	24	18	M8 (Depth : 20)	35	104	5	8 x 7 x 30	4
			300.5	135.5													
MSMD082□□1N	750W	1 / 5	255.7	112.2	50	30	78	70	90	19	17	M6 (Depth : 20)	26	93.5	3	6 x 6 x 22	3.5
			292.7	149.2													
MSMD082□□2N		1 / 9	270.7	112.2	61	40	98	90	115	24	18	M8 (Depth : 20)	35	97.5	5	8 x 7 x 30	4
			307.7	149.2													
MSMD082□□3N		1/15	283.2	112.2										110			
			320.2	149.2													
MSMD082□□4N		1/25	283.2	112.2													
			320.2	149.2													

Upper column : without brake
Lower column : with brake

Conformity to CE and UL

Compliance to EC and EMC Directives

EC Directives

The EC Directives apply to all such electronic products as those having specific functions and have been exported to EU and directly sold to general consumers. Those products are required to conform to the EU unified standards and to furnish the CE marking on the products.
MINAS AC Servos conforms to the EC Directives for Low Voltage Equipment so that the machine incorporating our servos has an easy access to the conformity to relevant EC Directives for the machine.

EMC Directives

MINAS Servo System conforms to relevant standards under EMC Directives setting up certain model (condition) with certain locating distance and wiring of the servo motor and the driver. And actual working condition often differs from this model condition especially in wiring and grounding. Therefore, in order for the machine to conform to the EMC Directives, especially for noise emission and noise terminal voltage, it is necessary to examine the machine incorporating our servos.

Conformed Standards

Subject	Conformed Standard		
Motor	IEC60034-1	IEC60034-5 UL1004 CSA22.2 No.100	Conforms to Low-Voltage Directives
Motor and driver	EN50178	UL508C CSA22.2 No.14	
	EN55011	Radio Disturbance Characteristics of Industrial, Scientific and Medical (ISM) Radio-Frequency Equipment	Standards referenced by EMC Directives
	EN61000-6-2	Immunity for Industrial Environments	
	IEC61000-4-2	Electrostatic Discharge Immunity Test	
	IEC61000-4-3	Radio Frequency Electromagnetic Field Immunity Test	
	IEC61000-4-4	Electric High-Speed Transition Phenomenon/Burst Immunity Test	
	IEC61000-4-5	Lightening Surge Immunity Test	
	IEC61000-4-6	High Frequency Conduction Immunity Test	
	IEC61000-4-11	Instantaneous Outage Immunity Test	

IEC : International Electrotechnical Commission
EN : Europaischen Normen
EMC : Electromagnetic Compatibility
UL : Underwriters Laboratories
CSA : Canadian Standards Association

Pursuant to at the directive 2004/108/EC,article 9(2)

Panasonic Testing Centre
Panasonic Service Europe,
a division of Panasonic Marketing Europe GmbH
Winsbergring 15,22525 Hamburg,F.R.Germany

Composition of peripheral equipment

<Precautions in using options>
Use options correctly after reading operation manuals of the options to better understand the precautions.
Take care not to apply excessive stress to each optional part.

Installation environment

Use the MINAS driver in environment of Pollution Degree
1 or 2 prescribed in IEC-60664-1
(e.g. Install the driver in control panel with IP54 protection structure.)

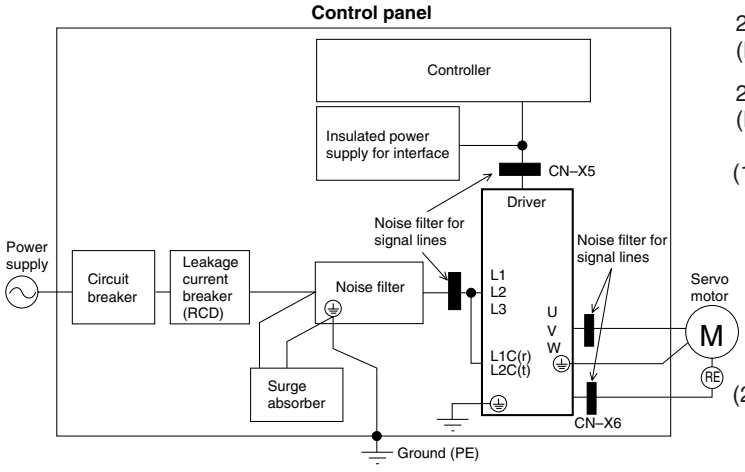

Power supply

100V system : Single phase 100V (Frame A to C)	+10% –15%	–115V	+10% –15%	50/60Hz
200V system : Single 200V (Frame A to B)	+10% –15%	–240V	+10% –15%	50/60Hz
200V system : Single/3- phase 200V (Frame C to D)	+10% –15%	–240V	+10% –15%	50/60Hz
200V system : 3- phase 200V (Frame E to G)	+10% –15%	–230V	+10% –15%	50/60Hz

(1) This product is designed to be used under Overvoltage Category (Installation Category) Ⅱ of EN50178 :1997. Install a surge absorber which conforms to EN61643-11 : 2002 and other relevant standards at the power entry when you want to use this product under Overvoltage Category (Installation Category) Ⅲ.

(2) For a interface power supply, use an insulated one with 12 to 24 VDC which conforms to CE Marking or EN Standards.

Circuit breaker

Connect a circuit breaker which conforms to IEC standards and is UL recognized (UL Listed, (UL) marked), between the power supply and the noise filter.

Noise filter

When you install one noise filter in the power supply for multi-axes application, consult with the manufacture of the filter.

Option part No.	Part No.	Manufacturer
DV0P4170	SUP-EK5-ER-6	Okaya Electric Industries Co.
DV0P4180	3SUP-HQ10-ER-6	
DV0P4220	3SUP-HU30-ER-6	
DV0P3410	3SUP-HL50-ER-6B	

DV0P4170 [unit: mm]

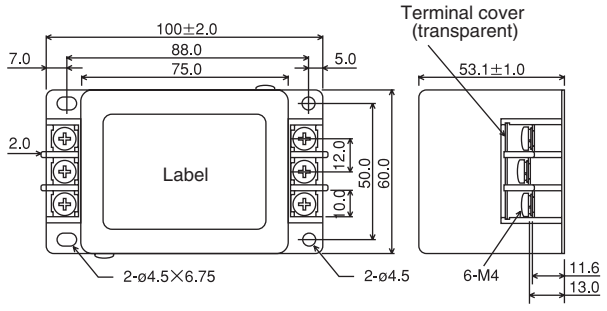

[unit: mm]

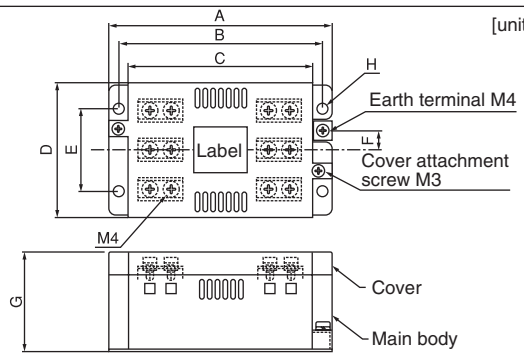

Option part No.	A	B	C	D	E	F	G	H
DV0P4180	115	105	95	70	43	10	52	5.5
DV0P4220	145	135	125	70	50	10	52	5.5

DV0P3410 [unit: mm]

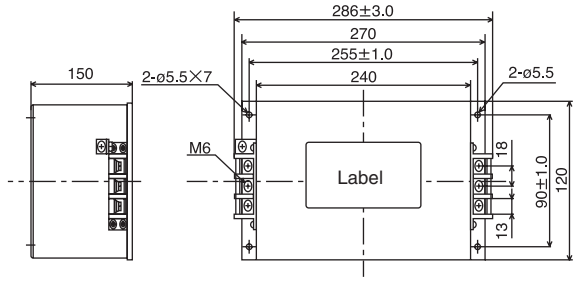

Surge absorber

Install a surge absorber at primary side of the noise filter.

Option part No.	Driver voltage spec	Part No.	Manufacturer
DV0P1450	3-phase, 200V	R · A · V-781BXZ-4	Okaya Electric

[unit: mm]

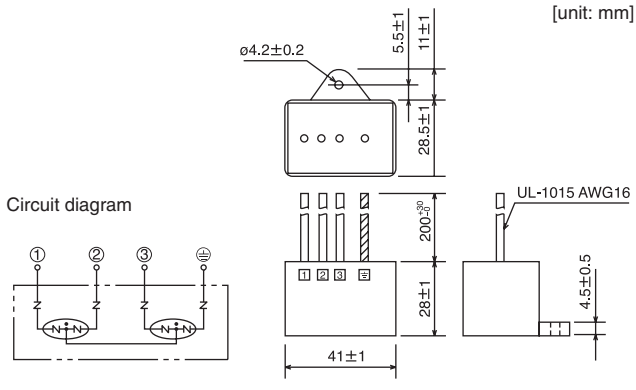

Option part No.	Driver voltage spec	Part No.	Manufacturer
DV0P4190	Single phase, 100V, 200V	R · A · V-781BWZ-4	Okaya Electric

[unit: mm]

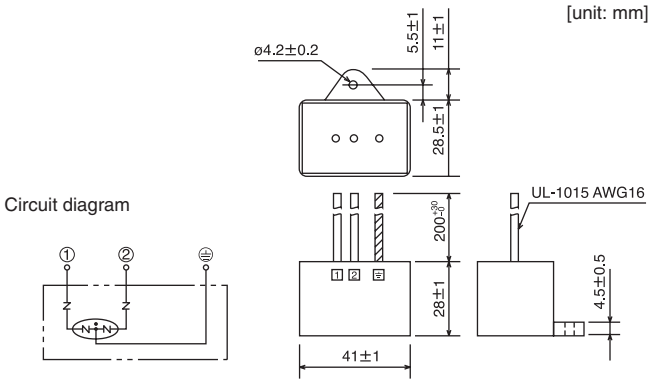

<Remarks>
Remove this surge absorber when you perform dielectric test on the machine, or serge absorber might be damaged.

Conformity to CE and UL

Noise filter for signal lines

Install noise filters for signal lines to all cables (Power line, motor cable, encoder cable, interface cable)

Option part No.	Part No.	Qty.	Manufacturer
DV0P1460	ZCAT3035-1330	4	TDK Corp.

<Caution>
Fix the signal line noise filter in place to eliminate excessive stress to the cables.
(Refer to page A4-137 [Composition of peripheral equipment])

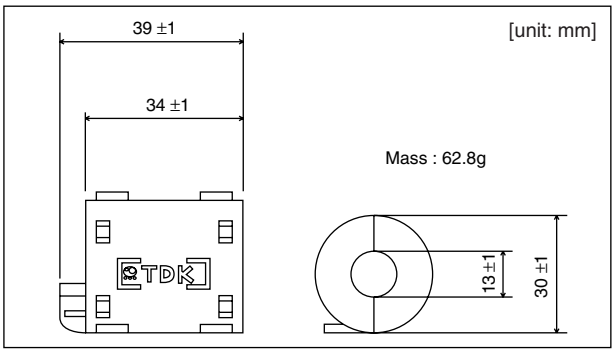

Ground-fault breaker

Install a B-type ground-fault breaker (RCD) at primary side of the power supply of the driver.

Grounding

(1) Connect the protective earth terminal of the driver (⏚) and protective earth terminal of the control panel (PE) without fail to prevent electrical shocks.
(2) Do not co-clamp to the protective earth terminals (⏚). Two protective earth terminals are provided.

Conformity to UL Standards

Observe the following conditions of (1) and (2) to make the system conform to UL508C (File No. E164620).
(1) Use the driver in an environment of Pollution Degree 2 or 1 prescribed in IEC60664-1. (e.g. Install in the control box with IP54 enclosure.)
(2) Install a circuit breaker or fuse which are UL recognized (LISTED UL marked) between the power supply and the noise filter without fail.
For the rated current of the circuit breaker or fuse, refer to P.A4-12, A4-38, A4-63, "List of recommneded prripheral equipments".
Use a copper cable with temperature rating of 60˚C or higher.
Tightening torque of more than the max. values (M4:1.2N·Em, M5: 2.0N·Em) may break the terminal block.

IP65 Rating

- MSMD, MQMA and MAMA motors conform to IP65 rating except for the connecter and shaft through hole.
- For MSMA, MDMA, MGMA, MFMA and MHMA motors, customer to supply the plug and cable clamp which conform to IP65 rating.
  (Optional connector kits for encoder cable and motor cable do not provide IP65 rating.)

Motor				(1) Receptacle connector (motor side) (or equivalent)	Plug and clamp (Customer to supply) manufactured by Japan Aviation Electronics Ind.				
					Plug				(6) Cable clump (or equivalent)
					(2) Straight type (or equivalent)	(3) Angle (L) type (or equivalent)	Low profile type		
	Series	Output (kW)					(4) Plug connector	(5) Low profile type endbell	
Without brake	MSMA	1.0 to 2.0		JL04V-2E20-4PE-B-R	JL04V-6A20-4SE-EB-R	JL04V-8A20-4SE-EB-R	JL04V-6A20-4SE-R	JL04-20EBA	JL04-2022CK(14)-R
		3.0 to 5.0		JL04HV-2E22-22PE-B-R	JL04V-6A22-22SE-EB-R	JL04V-8A22-22SE-EB-R	JL04V-6A22-22SE-R	JL04-22EBA	
	MDMA	1.0 to 2.0		JL04V-2E20-4PE-B-R	JL04V-6A20-4SE-EB-R	JL04V-8A20-4SE-EB-R	JL04V-6A20-4SE-R	JL04-20EBA	
		3.0 to 5.0		JL04HV-2E22-22PE-B-R	JL04V-6A22-22SE-EB-R	JL04V-8A22-22SE-EB-R	JL04V-6A22-22SE-R	JL04-22EBA	
		7.5		JL04V-2E32-17PE-B-R	N/MS3106B32-17S	N/MS3108B32-17S	—	—	N/MS3057-20A
	MGMA	0.9		JL04V-2E20-4PE-B-R	JL04V-6A20-4SE-EB-R	JL04V-8A20-4SE-EB-R	JL04V-6A20-4SE-R	JL04-20EBA	JL04-2022CK(14)-R
		2.0 to 4.5		JL04HV-2E22-22PE-B-R	JL04V-6A22-22SE-EB-R	JL04V-8A22-22SE-EB-R	JL04V-6A22-22SE-R	JL04-22EBA	
		6.0		JL04V-2E32-17PE-B-R	N/MS3106B32-17S	N/MS3108B32-17S	—	—	N/MS3057-20A
	MGMA	0.5 to 1.5		JL04V-2E20-4PE-B-R	JL04V-6A20-4SE-EB-R	JL04V-8A20-4SE-EB-R	JL04V-6A20-4SE-R	JL04-20EBA	JL04-2022CK(14)-R
		2.0 to 5.0		JL04HV-2E22-22PE-B-R	JL04V-6A22-22SE-EB-R	JL04V-8A22-22SE-EB-R	JL04V-6A22-22SE-R	JL04-22EBA	
		7.5		JL04V-2E32-17PE-B-R	N/MS3106B32-17S	N/MS3108B32-17S	—	—	N/MS3057-20A
	MFMA	0.4 to 1.5		JL04V-2E20-18PE-B-R	JL04V-6A20-18SE-EB-R	JL04V-8A20-18SE-EB-R	JL04V-6A20-18SE-R	JL04-20EBA	JL04-2022CK(14)-R
		2.5 to 4.5		JL04V-2E24-11PE-B-R	JL04V-6A24-11SE-EB-R	JL04V-8A24-11SE-EB-R	JL04V-6A24-11SE-R	JL04-24EBA	JL04-2428CK(17)-R
With brake	MSMA	1.0 to 2.0		JL04V-2E20-18PE-B-R	JL04V-6A20-18SE-EB-R	JL04V-8A20-18SE-EB-R	JL04V-6A20-18SE-R	JL04-20EBA	JL04-2022CK(14)-R
		3.0 to 5.0		JL04V-2E24-11PE-B-R	JL04V-6A24-11SE-EB-R	JL04V-8A24-11SE-EB-R	JL04V-6A24-11SE-R	JL04-24EBA	JL04-2428CK(17)-R
	MDMA	1.0 to 2.0		JL04V-2E20-18PE-B-R	JL04V-6A20-18SE-EB-R	JL04V-8A20-18SE-EB-R	JL04V-6A20-18SE-R	JL04-20EBA	JL04-2022CK(14)-R
		3.0 to 5.0		JL04V-2E24-11PE-B-R	JL04V-6A24-11SE-EB-R	JL04V-8A24-11SE-EB-R	JL04V-6A24-11SE-R	JL04-24EBA	JL04-2428CK(17)-R
		7.5	Motor	JL04V-2E32-17PE-B-R	N/MS3106B32-17S	N/MS3108B32-17S	—	—	N/MS3057-20A
			Brake	N/MS3102A14S-2P	N/MS3106B14S-2S	N/MS3108B14S-2S	—	—	N/MS3057-6A
	MGMA	0.9		JL04V-2E20-18PE-B-R	JL04V-6A20-18SE-EB-R	JL04V-8A20-18SE-EB-R	JL04V-6A20-18SE-R	JL04-20EBA	JL04-2022CK(14)-R
		2.0 to 4.5		JL04V-2E24-11PE-B-R	JL04V-6A24-11SE-EB-R	JL04V-8A24-11SE-EB-R	JL04V-6A24-11SE-R	JL04-24EBA	JL04-2428CK(17)-R
		6.0	Motor	JL04V-2E32-17PE-B-R	N/MS3106B32-17S	N/MS3108B32-17S	—	—	N/MS3057-20A
			Brake	N/MS3102A14S-2P	N/MS3106B14S-2S	N/MS3108B14S-2S	—	—	N/MS3057-6A
	MHMA	0.5 to 1.5		JL04V-2E20-18PE-B-R	JL04V-6A20-18SE-EB-R	JL04V-8A20-18SE-EB-R	JL04V-6A20-18SE-R	JL04-20EBA	JL04-2022CK(14)-R
		2.0 to 5.0		JL04V-2E24-11PE-B-R	JL04V-6A24-11SE-EB-R	JL04V-8A24-11SE-EB-R	JL04V-6A24-11SE-R	JL04-24EBA	JL04-2428CK(17)-R
		7.5	Motor	JL04V-2E32-17PE-B-R	N/MS3106B32-17S	N/MS3108B32-17S	—	—	N/MS3057-20A
			Brake	N/MS3102A14S-2P	N/MS3106B14S-2S	N/MS3108B14S-2S	—	—	N/MS3057-6A
	MFMA	0.4 to 1.5		JL04V-2E20-18PE-B-R	JL04V-6A20-18SE-EB-R	JL04V-8A20-18SE-EB-R	JL04V-6A20-18SE-R	JL04-20EBA	JL04-2022CK(14)-R
		2.5 to 4.5		JL04V-2E24-11PE-B-R	JL04V-6A24-11SE-EB-R	JL04V-8A24-11SE-EB-R	JL04V-6A24-11SE-R	JL04-24EBA	JL04-2428CK(17)-R
Encoder				N/MS3102A 20-29P	JA06A-20-29S-J1-EB-R	JA08A-20-29S-J1-EB-R	JA06A-20-29S-J1-R	JL04-20EBA	JL04-2022CK(14)-R

● Example of connector connection

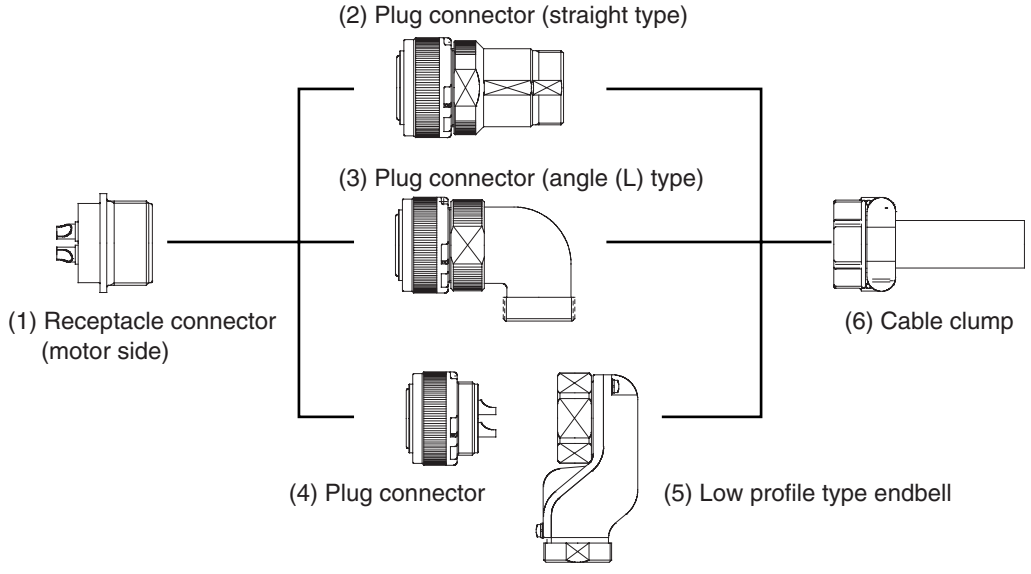

Options

Cable part No. designation

Encoder cable

1	2	3	4	5	6	7	8	9	10	11	12
M	F	E	C	A	0	0	5	0	E	A	M

Cable end (Driver side)

D	Molex Inc. connector (MINAS A4,A4P series, incremental)
E	Molex Inc. connector (MINAS A4,A4P series, absolute)
M	Molex Inc. connector (MINAS A4,A4P series, E series)

Cable end (Encoder side)

S	S-type cannon plug
A	Tyco Electronics, AMP connector

Cable type

E	PVC cable with shield by Oki Electric Cable Co., 0.20mm^2 x 8P, 3P

Cable length

0030	3m
0050	5m
0100	10m
0200	20m

Type classification

MFECA : Encoder cable

Motor cable, Brake cable

1	2	3	4	5	6	7	8	9	10	11	12
M	F	E	C	A	0	0	5	2	F	C	T

Cable end at driver side

D	Plus clamp terminal for MINAS A4,A4P by Phoenix contact
T	Clamp terminal

Cable end at motor side

E	Tyco Electronics, AMP connector
C	S type cannon plug

Cable type

E	ROBOTOP 4-wire by Daiden Co., Ltd.
F	ROBOTOP 6-wire by Daiden Co., Ltd.
G	ROBOTOP 2-wire by Daiden Co., Ltd.

Cross section of cable core

0	0.75mm^2
1	1.25mm^2
2	2.0mm^2
3	3.5mm^2

Cable length

003	3m
005	5m
010	10m
020	20m

Type classification

A	Standard
B ⋮	Special Design order

AC servo motor cable

• Pin configuration for encoder connector

MSMA
MDMA
MFMA
MHMA
MGMA

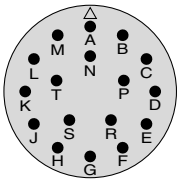

N/MS3102A20-29P
• Specifications of 2500P/r incremental encoder

PIN No.	Content	PIN No.	Content
A	NC	K	PS
B	NC	L	$\overline{PS}$
C	NC	M	NC
D	NC	N	NC
E	NC	P	NC
F	NC	R	NC
G	E0V	S	NC
H	E5V	T	NC
J	Frame GND		

MSMA
MDMA
MFMA
MHMA
MGMA

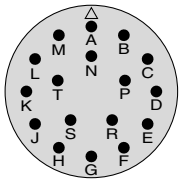

N/MS3102A20-29P
• Specifications of 17bit absolute/incremental encoder

PIN No.	Content	PIN No.	Content
A	NC	K	PS
B	NC	L	$\overline{PS}$
C	NC	M	NC
D	NC	N	NC
E	NC	P	NC
F	NC	R	NC
G	E0V	S	BAT–*
H	E5V	T	BAT+*
J	Frame GND		

*Connection to Pin-S and T are not required when used in incremental.

• Pin configuration for motor/brake connector (with brake)

MSMA 1kW, 1.5kW, 2kW
MDMA 1kW, 1.5kW, 2kW
MFMA 400W, 1.5kW
MHMA 500W, 1kW, 1.5kW
MGMA 900W

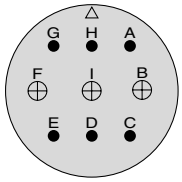

JL04V-2E20-18PE-B-R
(by Japan Aviation Electronics or equivalent)

PIN No.	Content
G	Brake
H	Brake
A	NC
F	U-phase
I	V-phase
B	W-phase
E	Ground
D	Ground
C	NC

MSMA 3kW, 4kW, 5kW
MDMA 3kW, 4kW, 5kW
MFMA 2.5kW, 4.5kW
MHMA 2kW,3kW,4kW,5kW
MGMA 2kW, 3kW, 4.5kW

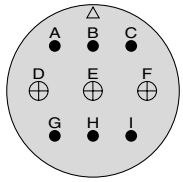

JL04V-2E24-11PE-B-R
(by Japan Aviation Electronics or equivalent)

PIN No.	Content
A	Brake
B	Brake
C	NC
D	U-phase
E	V-phase
F	W-phase
G	Ground
H	Ground
I	NC

MDMA 7.5kW
MGMA 6kW
MHMA 7.5kW

Motor Cable

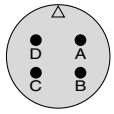

JL04V-2E32-17PE-B-R
(by Japan Aviation Electronics or equivalent)

PIN No.	Content
A	U-phase
B	V-phase
C	W-phase
D	Ground

Brake Cable

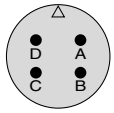

N/MS3102A 14S-2P
(by Japan Aviation Electronics or equivalent)

PIN No.	Content
A	Brake
B	Brake
C	NC
D	NC

• Pin configuration for motor/brake connector (without brake)

MSMA 1kW, 1.5kW, 2kW
MDMA 1kW, 1.5kW, 2kW
MHMA 500W, 1kW, 1.5kW
MGMA 900W

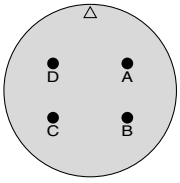

JL04V-2E20-4PE-B-R
(by Japan Aviation Electronics or equivalent)

PIN No.	Content
A	U-phase
B	V-phase
C	W-phase
D	Ground

MSMA 3kW, 4kW, 5kW
MDMA 3kW, 4kW, 5kW
MHMA 2kW,3kW,4kW,5kW
MGMA 2kW, 3kW, 4.5kW

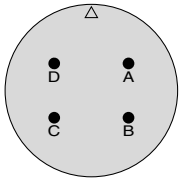

JL04V-2E22-22PE-B-R
(by Japan Aviation Electronics or equivalent)

PIN No.	Content
A	U-phase
B	V-phase
C	W-phase
D	Ground

MDMA 7.5kW
MGMA 6kW
MHMA 7.5kW

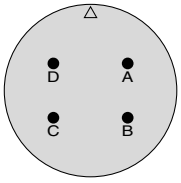

JL04V-2E32-17PE-B-R
(by Japan Aviation Electronics or equivalent)

PIN No.	Content
A	U-phase
B	V-phase
C	W-phase
D	Ground

MFMA 400W, 1.5kW

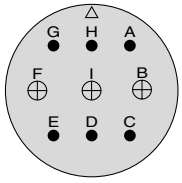

JL04V-2E20-18PE-B-R
(by Japan Aviation Electronics or equivalent)

PIN No.	Content
G	NC
H	NC
A	NC
F	U-phase
I	V-phase
B	W-phase
E	Ground
D	Ground
C	NC

MFMA 2.5kW, 4.5kW

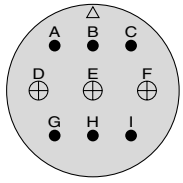

JL04V-2E24-11PE-B-R
(by Japan Aviation Electronics or equivalent)

PIN No.	Content
A	NC
B	NC
C	NC
D	U-phase
E	V-phase
F	W-phase
G	Ground
H	Ground
I	NC

Do not connect anything to NC pins.

Options

Encoder cable

[unit: mm]

MFECA0**0EAE

MSMD50W - 750W,MQMA100W - 400W,MAMA100W - 750W
17-bit absolute encoder, with battery holder

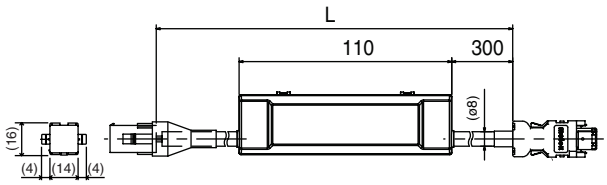

Title	Part No. (Manufacturer's)	Manufacturer
Connector	55100-0600 or 55100-0670	Molex Inc.
Connector	172161-1	Tyco Electronics, AMP
Connector pin	170365-1	
Cable	0.20mm² x 4P	Oki Electric Cable Co.

L(m)	Part No.
3	MFECA0030EAE
5	MFECA0050EAE
10	MFECA0100EAE
20	MFECA0200EAE

Note) Battery for absolute encoder (DV0P2990) is an option.

MFECA0**0ESE

MSMA,MDMA,MHMA,MGMA,MFMA
17-bit absolute encoder, with battery holder

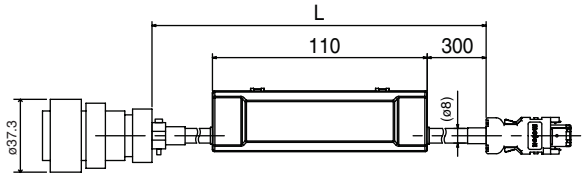

Title	Part No. (Manufacturer's)	Manufacturer
Connector	55100-0600 or 55100-0670	Molex Inc.
Straight plug	N/MS3106B20-29S	Japan Aviation Electronics Industry Ltd.
Cable clamp	N/MS3057-12A	
Cable	0.20mm² x 4P	Oki Electric Cable Co.

L(m)	Part No.
3	MFECA0030ESE
5	MFECA0050ESE
10	MFECA0100ESE
20	MFECA0200ESE

Note) Battery for absolute encoder (DV0P2990) is an option.

MFECA0**0EAD

MSMD50W - 750W,MQMA100W - 400W,MAMA100W - 750W
17-bit incremental encoder, without battery holder

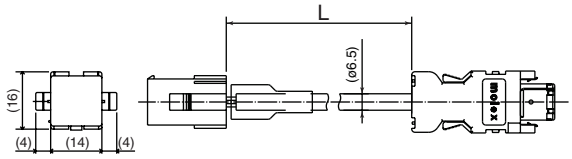

Title	Part No. (Manufacturer's)	Manufacturer
Connector	55100-0600 or 55100-0670	Molex Inc.
Connector	172161-1	Tyco Electronics, AMP
Connector pin	170365-1	
Cable	0.20mm² x 3P	Oki Electric Cable Co.

L(m)	Part No.
3	MFECA0030EAD
5	MFECA0050EAD
10	MFECA0100EAD
20	MFECA0200EAD

MFECA0**0ESD

MSMA,MDMA,MHMA,MGMA,MFMA
17-bit incremental/2500P/r encoder, without battery holder

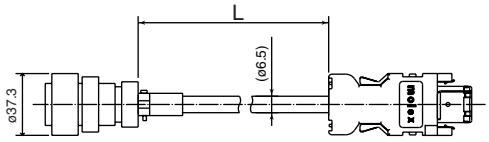

Title	Part No. (Manufacturer's)	Manufacturer
Connector	55100-0600 or 55100-0670	Molex Inc.
Straight plug	N/MS3106B20-29S	Japan Aviation Electronics Industry Ltd.
Cable clamp	N/MS3057-12A	
Cable	0.20mm² x 3P	Oki Electric Cable Co.

L(m)	Part No.
3	MFECA0030ESD
5	MFECA0050ESD
10	MFECA0100ESD
20	MFECA0200ESD

MFECA0**0EAM

MSMD50W - 750W,MQMA100W - 400W,MAMA100W - 750W
2500P/r encoder, without battery holder

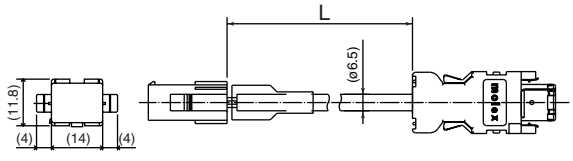

Title	Part No. (Manufacturer's)	Manufacturer
Connector	55100-0600 or 55100-0670	Molex Inc.
Connector	172160-1	Tyco Electronics, AMP
Connector pin	170365-1	
Cable	0.20mm² x 3P	Oki Electric Cable Co.

L(m)	Part No.
3	MFECA0030EAM
5	MFECA0050EAM
10	MFECA0100EAM
20	MFECA0200EAM

Motor cable (ROBO TOP® 105˚C,600V, DP)

[unit: mm]

ROBO TOP® is a trade mark of Daiden Co., Ltd.

MFMCA0**0EED

MSMD50W - 750W,MQMA100W - 400W,MAMA100W - 750W

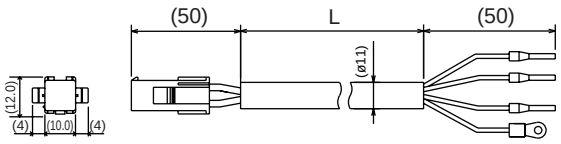

Title	Part No. (Manufacturer's)	Manufacturer
Connector	172159-1	Tyco Electronics, AMP
Connector pin	170366-1	
Rod terminal	AI0.75-8GY	Phoenix
Nylon insulated roundterminal	N1.25-M4	J.S.T. Mfg. Co., Ltd.
Cable	ROBO-TOP 600V 0.75mm²	Daiden Co., Ltd.

L (m)	Part No.
3	MFMCA0030EED
5	MFMCA0050EED
10	MFMCA0100EED
20	MFMCA0200EED

MFMCDO**2ECD

MSMA1.0kW - 1.5kW,MDMA1.0kW - 1.5kW
MHMA500W - 1.5kW,MGMA900W

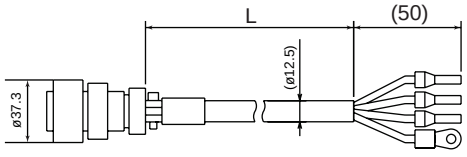

Title	Part No. (Manufacturer's)	Manufacturer
Straight plug	JL04V-6A20-4SE-EB-R	Japan Aviation Electronics Industry Ltd.
Cable clamp	JL04-2022CK(14)-R	
Rod terminal	NTUB-2	J.S.T. Mfg. Co., Ltd.
Nylon insulated roundterminall	N2-M4	
Cable	ROBO-TOP 600V 2.0mm²	Daiden Co., Ltd.

L (m)	Part No.
3	MFMCD0032ECD
5	MFMCD0052ECD
10	MFMCD0102ECD
20	MFMCD0202ECD

MFMCDO**2ECT

MSMA2.0kW,MDMA2.0kW

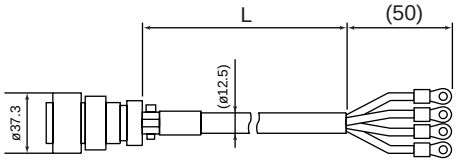

Title	Part No. (Manufacturer's)	Manufacturer
Straight plug	JL04V-6A20-4SE-EB-R	Japan Aviation Electronics Industry Ltd.
Cable clamp	JL04-2022CK(14)-R	
Nylon insulated roundterminall	N2-5	J.S.T. Mfg. Co., Ltd.
Cable	ROBO-TOP 600V 2.0mm²	Daiden Co., Ltd.

L (m)	Part No.
3	MFMCD0032ECT
5	MFMCD0052ECT
10	MFMCD0102ECT
20	MFMCD0202ECT

MFMCAO**3ECT

MSMA3.0kW - 5.0kW,MDMA3.0kW - 5.0kW
MHMA2.0kW - 5.0kW,MGMA2.0kW - 4.5kW

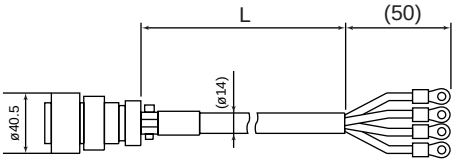

Title	Part No. (Manufacturer's)	Manufacturer
Straight plug	JL04V-6A22-22SE-EB-R	Japan Aviation Electronics Industry Ltd.
Cable clamp	JL04-2022CK(14)-R	
Nylon insulated roundterminal	N5.5-5	J.S.T. Mfg. Co., Ltd.
Cable	ROBO-TOP 600V 3.5mm²	Daiden Co., Ltd.

L (m)	Part No.
3	MFMCA0033ECT
5	MFMCA0053ECT
10	MFMCA0103ECT
20	MFMCA0203ECT

MFMCAO**

MFMA400W - 1.5kW

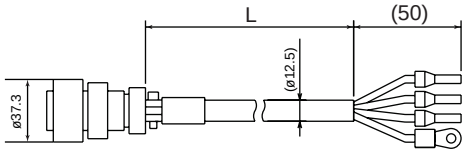

Title	Part No. (Manufacturer's)	Manufacturer
Straight plug	JL04V-6A20-18SE-EB-R	Japan Aviation Electronics Industry Ltd.
Cable clamp	JL04-2022CK(14)-R	
Rod terminal	NTUB-2	J.S.T. Mfg. Co., Ltd.
Nylon insulated roundterminal	N2-M4	
Cable	ROBO-TOP 600V 2.0mm²	Daiden Co., Ltd.

L (m)	Part No.
3	MFMCA0032ECD
5	MFMCA0052ECD
10	MFMCA0102ECD
20	MFMCA0202ECD

MFMCDO**3ECT

MFMA2.5kW - 4.5kW

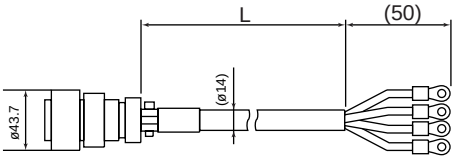

Title	Part No. (Manufacturer's)	Manufacturer
Straight plug	JL04V-6A24-11SE-EB-R	Japan Aviation Electronics Industry Ltd.
Cable clamp	JL04-2428CK(17)-R	
Nylon insulated roundterminal	N5.5-5	J.S.T. Mfg. Co., Ltd.
Cable	ROBO-TOP 600V 3.5mm²	Daiden Co., Ltd.

L (m)	Part No.
3	MFMCD0033ECT
5	MFMCD0053ECT
10	MFMCD0103ECT
20	MFMCD0203ECT

Options

Brake cable (ROBO-TOP® 105˚C 600V · DP)

[unit: mm]

MFMCB00GET**

MSMD 50W - 750W
MQMA100W - 400W
MAMA 100W - 750W

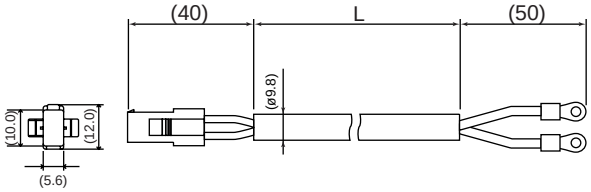

Title	Part No. (Manufacturer's)	Manufacturer
Connector	172157-1	Japan Aviation Electronics Industry Ltd.
Connector pin	170366-1,170362-1	
Nylon insulated roundterminal	N1.25-M4	J.S.T. Mfg. Co., Ltd.
Cable	ROBO-TOP 600V 0.75mm²	Daiden Co., Ltd.

L(m)	Part No.
3	MFMCB0030GET
5	MFMCB0050GET
10	MFMCB0100GET
20	MFMCB0200GET

Motor cable (with brake) (ROBO-TOP® 105˚C 600V · DP)

[unit: mm]

ROBO TOP® is a trade mark of Daiden Co., Ltd.

MFMCAO2FCD**

MSMA1.0kW -1.5kW,MDMA1.0kW - 1.5kW
MHMA 500W -1.5kW,MFMA 400W - 1.5kW
MGMA 900W

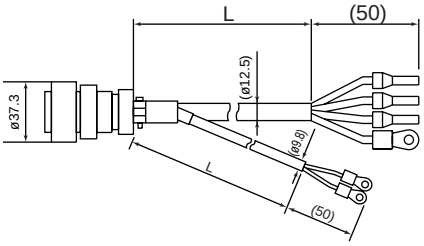

Title	Part No. (Manufacturer's)	Manufacturer
Straight plug	JL04V-6A20-18SE-EB-R	Japan Aviation Electronics Industry Ltd.
Cable clamp	JL04-2022CK(14)-R	
Rod terminal	NTUB-2	J.S.T. Mfg. Co., Ltd.
Nylon insulated roundterminal	N2-M4	
	N1.25-M4	
Cable	ROBO-TOP 600V 2.0mm² or ROBO-TOP 600V 0.75mm²	Daiden Co., Ltd.

L(m)	Part No.
3	MFMCA0032FCD
5	MFMCA0052FCD
10	MFMCA0102FCD
20	MFMCA0202FCD

MFMCAO2FCT**

MSMA2.0kW,MDMA2.0kW

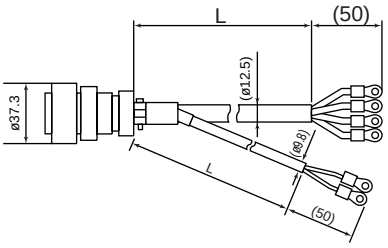

Title	Part No. (Manufacturer's)	Manufacturer
Straight plug	JL04V-6A20-18SE-EB-R	Japan Aviation Electronics Industry Ltd.
Cable clamp	JL04-2022CK(14)-R	
Nylon insulated roundterminal	N2-5	J.S.T. Mfg. Co., Ltd.
	N1.25-M4	
Cable	ROBO-TOP 600V 2.0mm² or ROBO-TOP 600V 0.75mm²	Daiden Co., Ltd.

L(m)	Part No.
3	MFMCA0032FCT
5	MFMCA0052FCT
10	MFMCA0102FCT
20	MFMCA0202FCT

MFMCA03FCT**

MSMA 3.0kW - 5.0kW ,MDMA 3.0kW - 5.0kW
MHMA 2.0kW - 5.0kW ,MFMA 2.5kW - 4.5kW
MGMA 2.0kW - 4.5kW

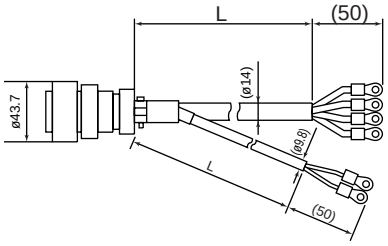

Title	Part No. (Manufacturer's)	Manufacturer
Straight plug	JL04V-6A24-11SE-EB-R	Japan Aviation Electronics Industry Ltd.
Cable clamp	JL04-2428CK(17)-R	
Nylon insulated roundterminal	N5.5-5	J.S.T. Mfg. Co., Ltd.
	N1.25-M4	
Cable	ROBO-TOP 600V 3.5mm² or ROBO-TOP 600V 0.75mm²	Daiden Co., Ltd.

L(m)	Part No.
3	MFMCA0033FCT
5	MFMCA0053FCT
10	MFMCA0103FCT
20	MFMCA0203FCT

Connector kit for external peripheral equipments

● MINAS A4, A4F

1) Par No. **DV0P4350**

2) Components

Title	Part No.	Quantity	Manufacturer	Note
Connector	54306-5011 or 54306-5019 (lead-free)	1	Molex Inc.	For CN X5 (50-pins)
Connector cover	54331-0501	1		

3) Pin disposition (50 pins) (viewed from the soldering side)

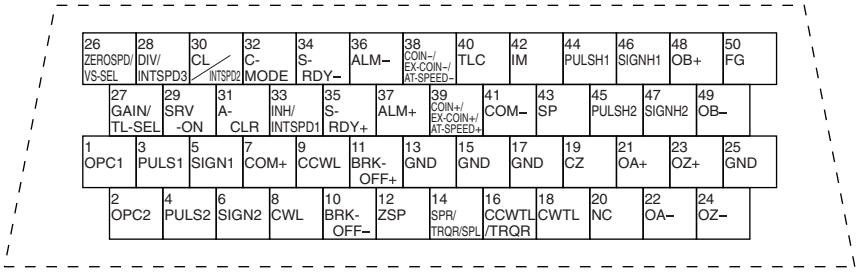

<Cautions>

1) Check the stamped pin-No. on the connector body while making a wiring.
2) For the function of each signal title or its symbol, refer to the wiring example of the connector CN I/F.
3) Check the stamped pin-No. on the connector body while making a wiring.

● MINAS A4P

1) Par No. **DV0P4500**

2) Components

Title	Part No.	Quantity	Manufacturer	Note
Connector	54306-3611 or 54306-3619 (lead-free)	1	Molex Inc.	For CN X5 (36-pins)
Connector cover	54331-0361	1		

3) Pin disposition (36 pins) (viewed from the soldering side)

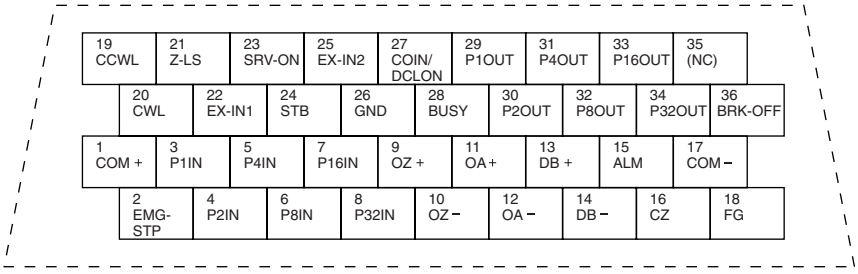

<Cautions>

1) Check the stamped pin-No. on the connector body while making a wiring.
2) For the function of each signal title or its symbol, refer to the wiring example of the connector CN I/F.
3) Check the stamped pin-No. on the connector body while making a wiring.

Options

Interface cable

[unit: mm]

● MINAS A4, A4F

Cable of 2m is connected.

1) Part No. **DV0P4360**

2) Dimensions

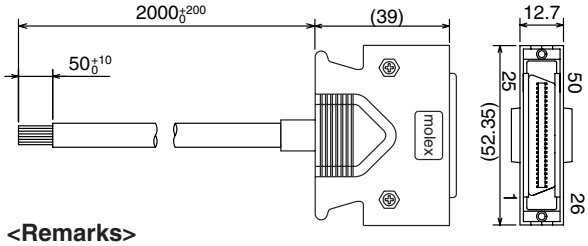

<Remarks>
Color designation of the cable
e.g.) Pin-1 Cable color : Orange
(Red1) : One red dot on the cable

3) Table for wiring

PIN No.	color	PIN No.	color	PIN No.	color	PIN No.	color	PIN No.	color
1	Orange (Red1)	11	Orange (Black2)	21	Orange (Red3)	31	Orange (Red4)	41	Orange (Red5)
2	Orange (Black1)	12	Yellow (Black1)	22	Orange (Black3)	32	Orange (Black4)	42	Orange (Black5)
3	Gray (Red1)	13	Gray (Red2)	23	Gray (Red3)	33	Gray (Red4)	43	Gray (Red5)
4	Gray (Black1)	14	Gray (Black2)	24	Gray (Black3)	34	White (Red4)	44	White (Red5)
5	White (Red1)	15	White (Red2)	25	White (Red3)	35	White (Black4)	45	White (Black5)
6	White (Black1)	16	Yellow (Red2)	26	White (Black3)	36	Yellow (Red4)	46	Yellow (Red5)
7	Yellow (Red1)	17	Yel(Blk2)/ Pink(Blk2)	27	Yellow (Red3)	37	Yellow (Black4)	47	Yellow (Black5)
8	Pink (Red1)	18	Pink (Red2)	28	Yellow (Black3)	38	Pink (Red4)	48	Pink (Red5)
9	Pink (Black1)	19	White (Black2)	29	Pink (Red3)	39	Pink (Black4)	49	Pink (Black5)
10	Orange (Red2)	20	——	30	Pink (Black3)	40	Gray (Black4)	50	Gray (Black5)

● MINAS A4P

1) Part No. **DV0P4510**

2) Dimensions

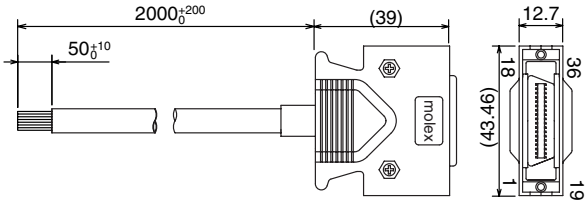

<Remarks>
Color designation of the cable
e.g.) Pin-1 Cable color : Orange
(Red1) : One red dot on the cable

3) Table for wiring

PIN No.	color	PIN No.	color	PIN No.	color
1	Orange(Red1)	13	Gray(Red2)	25	White(Red3)
2	Orange(Black1)	14	Gray(Black2)	26	White(Black3)
3	Gray(Red1)	15	White(Red2)	27	Yellow(Red3)
4	White(Red1)	16	White(Black2)	28	Yellow(Black3)
5	White(Black1)	17	Yellow(Red2)	29	Pink(Red3)
6	Gray(Black1)	18	Yellow(Black2)	30	Pink(Black3)
7	Yellow(Red1)	19	Pink(Red2)	31	Orange(Red4)
8	Yellow(Black1)	20	Pink(Black2)	32	Orange(Black4)
9	Pink(Red1)	21	Orange(Red3)	33	Gray(Red4)
10	Pink(Black1)	22	Orange(Black3)	34	Gray(Black4)
11	Orange(Red2)	23	Gray(Red3)	35	White(Red4)
12	Orange(Black2)	24	Gray(Black3)	36	White(Black4)

Communication cable (for connection with PC)

[unit: mm]

1) Part No. **DV0P1960**

2) Dimensions

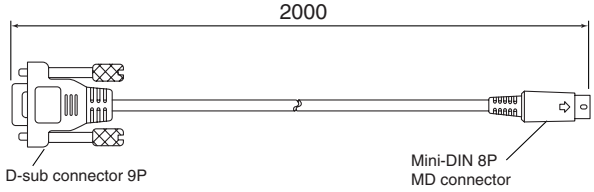

Communication cable (for RS485) < This cable cannot be used for the A4P series >

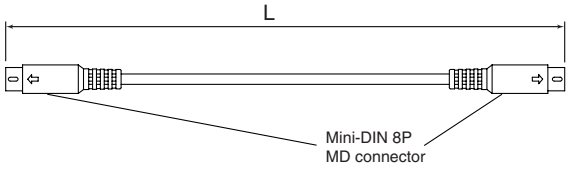

Part No.	L[mm]
DV0P1970	200
DV0P1971	500
DV0P1972	1000

Connector kit for motor and encoder

<Notification>
There may be cases where parts equivalent to those indicated by the part Nos. shown follow are used as components such as connectors, connector covers, straight plugs and cable clamps.

•Applicable motor models : MSMD 50W to 750W
MQMA 100W to 400W
MAMA 100W to 750W
[**17-bit absolute**] For brake, purchase our optional brake cable.

1) Part No. **DV0P4290**

2) Components

Title	Part No.	Number	Manufacturer	Note
Connector	55100-0600 or 55100-0670 (lead-free)	**1**	Molex Inc.	For CN X6 (6-pins)
Connector	172161-1	**1**	Tyco Electronics AMP	For junction cable to encoder (9-pins)
Connector pin	170365-1	**9**		
Connector	172159-1	**1**	Tyco Electronics AMP	For junction cable to motor (4-pins)
Connector pin	170366-1	**4**		

3) Pin configuration of connector, CN X6

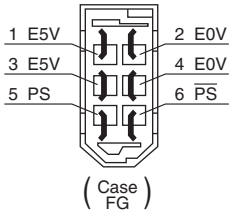

4) Pin configuration of junction cable for encoder

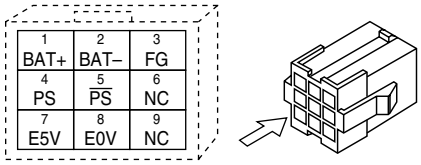

5) Pin configuration of junction cable for motor power

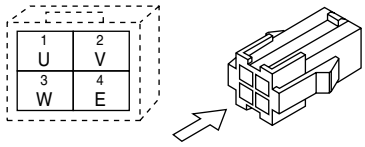

*When you connect the battery for absolute encoder, refer to A4-154, "When you make your own cable for 17-bit absolute encoder"

•Applicable motor models : MSMD 50W to 750W
MQMA 100W to 400W
MAMA 100W to 750W
[**2500P/r incremental encoder**] For brake, purchase our optional brake cable.

1) Part No. **DV0P4380**

2) Components

Title	Part No.	Number	Manufacturer	Note
Connector	55100-0600 or 55100-0670 (lead-free)	**1**	Molex Inc.	For CN X6 (6-pins)
Connector	172160-1	**1**	Tyco Electronics AMP	For junction cable to encoder (6-pins)
Connector pin	170365-1	**6**		
Connector	172159-1	**1**	Tyco Electronics AMP	For junction cable to encoder (4-pins)
Connector pin	170366-1	**4**		

3) Pin configuration of connector, CN X6

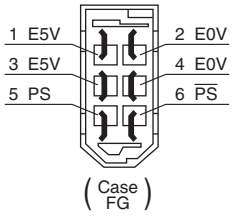

4) Pin configuration of junction cable for encoder

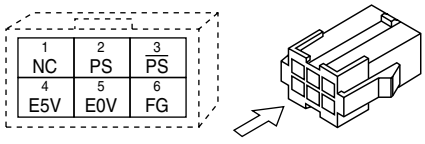

5) Pin configuration of junction cable for motor power

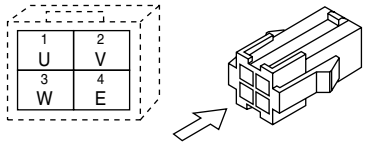

• For DV0P2490, DV0P4380, recommended manual crimp tool
(to be prepared by customer)

Title	Part No.	Manufacturer
For junction cable to encoder	755330 - 1	Tyco Electronics AMP
For junction cable to motor	755331 - 1	

Options

Pin configuration of connector CN X6 plug

1. Shown in the figure at right is the pin configuration as seen from the soldering side of the connector. Also check the pin No. inscribed on the case main body and take care to carry out wiring properly.
2. Be sure to connect to the case (FG) the shield of the shielded wire to be used.
3. For wiring and connecting, refer to pages A4-19, 45 and 71.

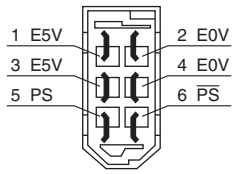

(Case FG)

•Applicable motor models : MSMA 1.0kW to 2.0kW
MDMA 1.0kW to 2.0kW
MHMA 500W to 1.5kW
MGMA 900W

[**17-bit absolute incremental encoder, 2500P/r incremental encoder**] Without brake

1) Part No. **DV0P4310**

2) Components

Title	Part No.	Number	Manufacturer	Note
Connector	55100-0600 or 55100-0670	1	Molex Inc.	For CN X6 (6-pins)
Straight plug	N/MS3106B20-29S	1	Japan Aviation Electronics Industry Ltd.	For junction cable to encoder
Cable clamp	N/MS3057-12A	1		
Straight plug	N/MS3106B20-4S	1	Japan Aviation Electronics Industry Ltd.	For junction cable to motor power
Cable clamp	N/MS3057-12A	1		

•Applicable motor models : MSMA 3.0kW to 5.0kW
MDMA 3.0kW to 5.0kW
MHMA 2.0kW to 5.0kW
MGMA 2.0kW to 4.5kW

[**17-bit absolute incremental encoder, 2500P/r incremental encoder**] Without brake

1) Part No. **DV0P4320**

2) Components

Title	Part No.	Number	Manufacturer	Note
Connector	55100-0600 or 55100-0670	1	Molex Inc.	For CN X6 (6-pins)
Straight plug	N/MS3106B-20-29S	1	Japan Aviation Electronics Industry Ltd.	For junction cable to encoder
Cable clamp	N/MS3057-12A	1		
Straight plug	N/MS3106B22-22S	1	Japan Aviation Electronics Industry Ltd.	For junction cable to motor power
Cable clamp	N/MS3057-12A	1		

•Applicable motor models : MSMA 1.0kW to 2.0kW
MDMA 1.0kW to 2.0kW
MHMA 0.5kW to 1.5kW
MGMA 900W

[**17-bit absolute incremental encoder, 2500P/r incremental encoder**] With brake

MFMA 0.4kW to 1.5kW

[**17-bit absolute incremental encoder, 2500P/r incremental encoder**] Without brake / With brake

1) Part No. **DV0P4330**

2) Components

Title	Part No.	Number	Manufacturer	Note
Connector	55100-0600 or 55100-0670	1	Molex Inc.	For CN X6 (6-pins)
Straight plug	N/MS3106B20-29S	1	Japan Aviation Electronics Industry Ltd.	For junction cable to encoder
Cable clamp	N/MS3057-12A	1		
Straight plug	N/MS3106B20-18S	1	Japan Aviation Electronics Industry Ltd.	For junction cable to motor power
Cable clamp	N/MS3057-12A	1		

•Applicable motor models : MSMA 3.0kW to 5.0kW
MDMA 3.0kW to 5.0kW
MHMA 2.0kW to 5.0kW
MGMA 2.0kW to 4.5kW
[**17-bit absolute incremental encoder, 2500P/r incremental encoder**] With brake

MFMA 2.5kW to 4.5kW [**17-bit absolute incremental encoder, 2500P/r incremental encoder**] Without brake / With brake

1) Part No. **DV0P4340**

2) Components

Title	Part No.	Number	Manufacturer	Note
Connector	55100-0600 or 55100-0670	1	Molex Inc.	For CN X6 (6-pins)
Straight plug	N/MS3106B20-29S	1	Japan Aviation Electronics Industry Ltd.	For junction cable to encoder
Cable clamp	N/MS3057-12A	1		
Straight plug	N/MS3106B24-11S	1	Japan Aviation Electronics Industry Ltd.	For junction cable to motor power
Cable clamp	N/MS3057-16A	1		

•Applicable motor models : MDMA 7.5kW
MGMA 6.0kW
MHMA 7.5kW
[**17-bit absolute incremental encoder, 2500P/r incremental encoder**] Without brake

1) Part No. **DV0PM20005**

2) Components

Title	Part No.	Number	Manufacturer	Note
Connector	55100-0600 or 55100-0670 (lead-free)	1	Molex Inc.	For CN X6 (6-pins)
Straight plug	N/MS3106B20-29S	1	Japan Aviation Electronics Industry Ltd.	For junction cable to encoder
Cable clamp	N/MS3057-12A	1		
Straight plug	N/MS3106B32-17S	1	Japan Aviation Electronics Industry Ltd.	For junction cable to motor power
Cable clamp	N/MS3057-20A	1		

•Applicable motor models : MDMA 7.5kW
MGMA 6.0kW
MHMA 7.5kW
[**17-bit absolute incremental encoder, 2500P/r incremental encoder**] With brake

1) Part No. **DV0PM20006**

2) Components

Title	Part No.	Number	Manufacturer	Note
Connector	55100-0600 or 55100-0670 (lead-free)	1	Molex Inc.	For CN X6 (6-pins)
Straight plug	N/MS3106B20-29S	1	Japan Aviation Electronics Industry Ltd.	For junction cable to encoder
Cable clamp	N/MS3057-12A	1		
Straight plug	N/MS3106B32-17S	1	Japan Aviation Electronics Industry Ltd.	For junction cable to motor power
Cable clamp	N/MS3057-20A	1		
Straight plug	N/MS3106B14S-2S	1	Japan Aviation Electronics Industry Ltd.	For junction cable to brake cable
Cable clamp	N/MS3057-6A	1		

---

1) Part No. **DV0PM20010**

2) Components

Title	Part No.	Number	Manufacturer	Note
Connector	55100-0600 or 55100-0670 (lead-free)	1	Molex Inc.	For CN X6 or CN X7 (6-pins)

Options

Setup support software "PANATERM"

1) Part No. **DV0P4460** (Japanese/English version)
2) Supply media : CD-ROM

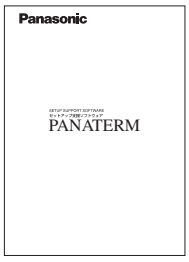

<Caution>
For information on the software and operating environment, refer to p.F2 of this document or [PANATERM] instruction manual.

Mounting bracket

Frame symbol of applicable driver	part No.	Mounting screw	Dimensions [unit: mm]	
			Upper side	Bottom side
Frame A	**DV0P 4271**	M4 x L6 Pan head 4pcs	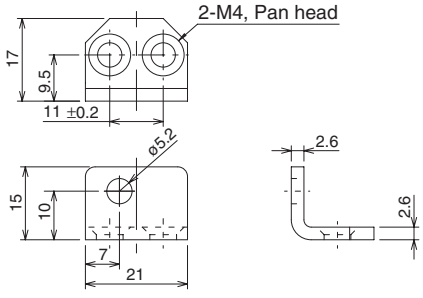	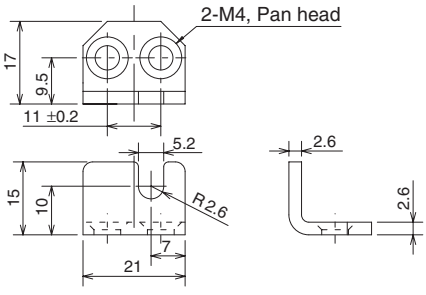
Frame B	**DV0P 4272**	M4 x L6 Pan head 4pcs	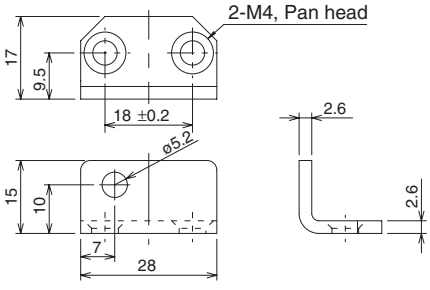	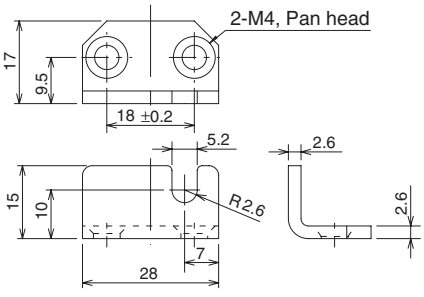
Frame C	**DV0P 4273**	M4 x L6 Pan head 4pcs	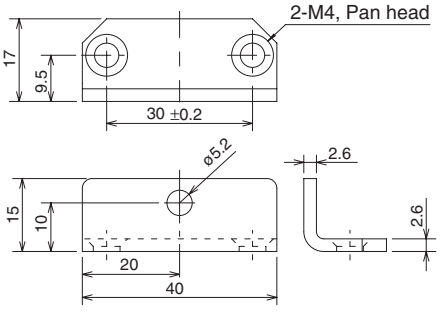	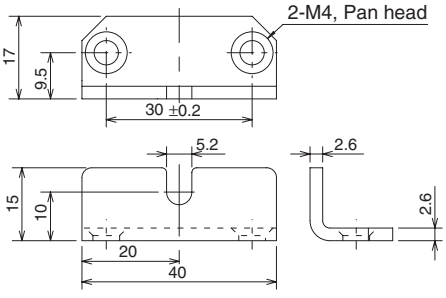
Frame D	**DV0P 4274**	M4 x L6 Pan head 4pcs	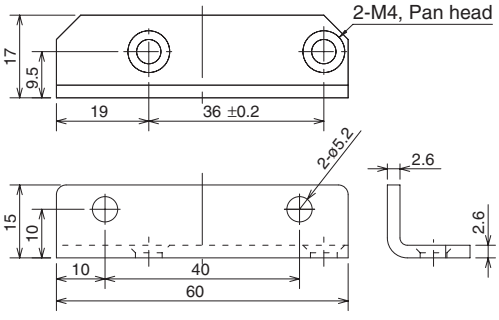	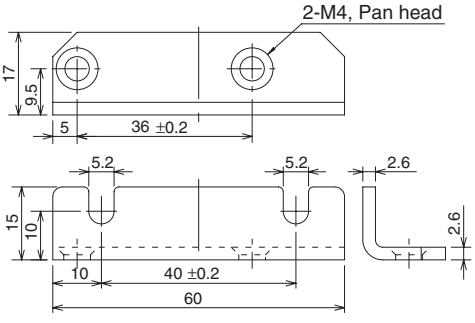

<Caution> For Frame E, F you can make a front end and back end mounting by changing the mounting direction of L-shape bracket (attachment).

Console

[unit: mm]

1) Part No. **DV0P4420** Caution) An existing console(DV0P3690) cannot be used for the A4P series.

2) Dimensions

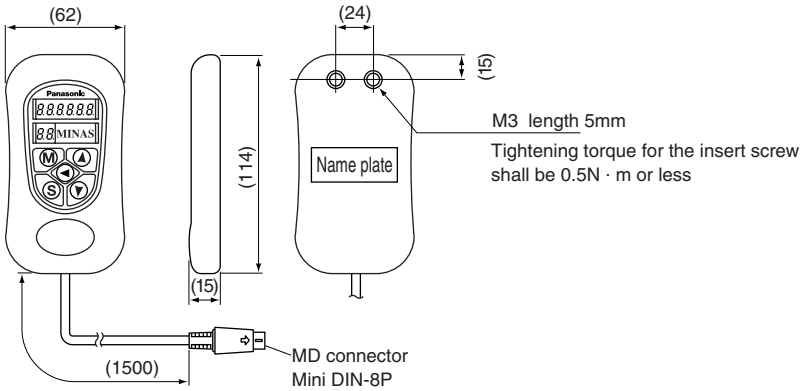

Reactor

Fig.1

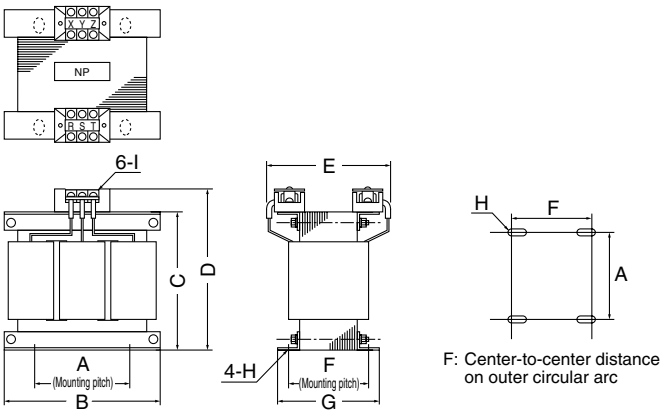

Fig.2

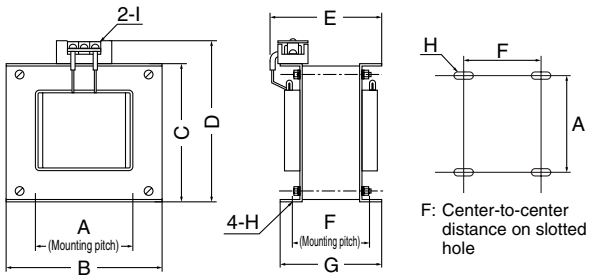

[unit: mm]

	Part No.	A	B	C	D	E (Max)	F	G	H	I	Inductance (mH)	Rated current (A)
Fig. 1	DV0P220	65±1	125±1	(93)	136Max	155	70 + 3/–0	85±2	4-7ø x 12	M4	6.81	3
	DV0P221	60±1	150±1	(113)	155Max	130	60 + 3/–0	75±2	4-7ø x 12	M4	4.02	5
	DV0P222	60±1	150±1	(113)	155Max	140	70 + 3/–0	85±2	4-7ø x 12	M4	2	8
	DV0P223	60±1	150±1	(113)	155Max	150	79 + 3/–0	95±2	4-7ø x 12	M4	1.39	11
	DV0P224	60±1	150±1	(113)	160Max	155	84 + 3/–0	100±2	4-7ø x 12	M4	0.848	16
	DV0P225	60±1	150±1	(113)	160Max	170	100 + 3/–0	115±2	4-7ø x 12	M5	0.557	25
Fig. 2	DV0P227	55±0.7	80±1	66.5±1	110Max	90	41±2	55±2	4-5ø x 10	M4	4.02	5
	DV0P228	55±0.7	80±1	66.5±1	110Max	95	46±2	60±2	4-5ø x 10	M4	2	8

Harmonic restraint on general-purpose inverter and servo driver

On September, 1994, Guidelines for harmonic restraint on heavy consumers who receive power through high voltage system or extra high voltage system and Guidelines for harmonic restraint on household electrical appliances and general-purpose articles established by the Agency for Natural Resources and Energy of the Ministry of Economy, Trade and Industry (the ex-Ministry of International Trade and Industry). According to those guidelines, the Japan Electrical Manufacturers Association (JEMA) have prepared technical documents (procedure to execute harmonic restraint: JEM-TR 198, JEM-TR 199 and JEM-TR 201) and have been requesting the users to understand the restraint and to cooperate with us. On January, 2004, it has been decided to exclude the general-purpose inverter and servo driver from the Guidelines for harmonic restraint on household electrical appliances and general-purpose articles". After that, the Guidelines for harmonic restraint on household electrical appliances and general-purpose articles was abolished on September 6, 2004.

We are pleased to inform you that the procedure to execute the harmonic restraint on general-purpose inverter and servo driver will be modified as follows.

1. All types of the general-purpose inverters and servo drivers used by specific users are under the control of the Guidelines for harmonic restraint on heavy consumers who receive power through high voltage system or extra high voltage system". The users who are required to apply the guidelines must calculate the equivalent capacity and harmonic current according to the guidelines and must take appropriate countermeasures if the harmonic current exceeds a limit value specified in a contract demand. (Refer to JEM-TR 210 and JEM-TR 225.)
2. The Guidelines for harmonic restraint on household electrical appliances and general-purpose articles was abolished on September 6, 2004. However, based on conventional guidelines, JEMA applies the technical documents JEM-TR 226 and JEM-TR 227 to any users who do not fit into the Guidelines for harmonic restraint on heavy consumers who receive power through high voltage system or extra high voltage system from a perspective on enlightenment on general harmonic restraint. The purpose of these guidelines is the execution of harmonic restraint at every device by a user as usual to the utmost extent.

<Remarks> When using a reactor, be sure to install one reactor to one servo driver.

Options

External regenerative resistor

Part No.	Manufacturer's part No.	Specifications					Activation temperature of built-in thermostat
		Resistance	Reted power (reference)*				
			Free air	with fan[W]			
				1m/s	2m/s	3m/s	
DV0P4280	RF70M	50 Ω	10W	25	35	45	140 ±5˚C B-contact Open/Close capacity (resistance load) 4A 125VAC 10000 times 2.5A 250VAC 10000 times
DV0P4281	RF70M	100 Ω	10W	25	35	45	
DV0P4282	RF180B	25 Ω	17W	50	60	75	
DV0P4283	RF180B	50 Ω	17W	50	60	75	
DV0P4284	RF240	30 Ω	40W	100	120	150	
DV0P4285	RH450F	20 Ω	52W	130	160	200	

*Power with which the driver can be used without activating the built-in thermostat.
Manufacturer : Iwaki Musen Kenkyusho

[unit: mm]

DV0P4280, DV0P4281

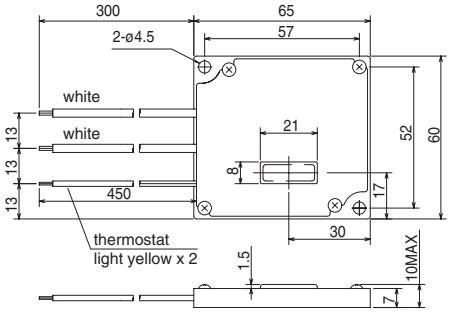

DV0P4282, DV0P4283

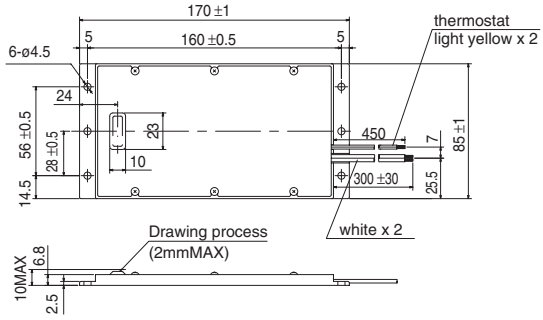

DV0P4284

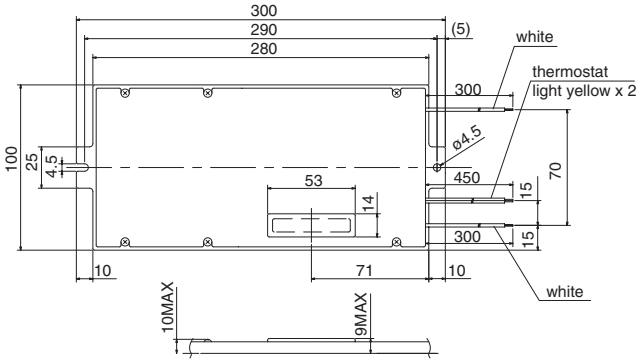

DV0P4285

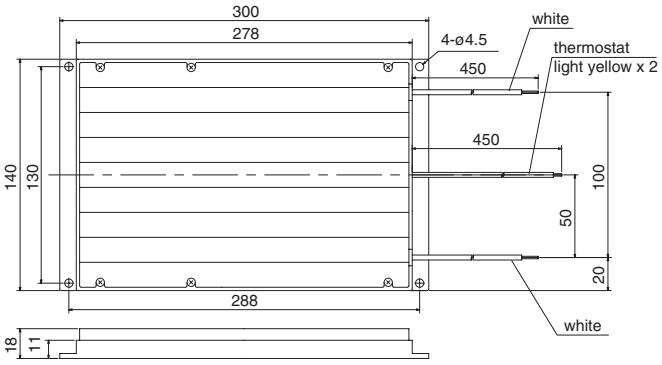

<Remarks>

Thermal fuse and thermostat are installed for safety. Compose the circuit so that the power will be turned off when the thermostat is activated.The thermal fuse may blow due to heat dissipating condition, working temperature, supply voltage or load fluctuation.

Make it sure that the surface temperature of the resistor may not exceed 100˚C at the worst running conditions with the machine, which brings large regeneration (such case as high supply voltage, load inertia is large or deceleration time is short) Install a fan for a forced cooling if necessary.

<Caution>

Regenerative resistor gets very hot.

Take preventive measures for fire and burns.
Avoid the installation near inflammable objects, and easily accessible place by hand.

Battery for absolute encoder (Frame A to G)

[unit: mm]

1) Part No. **DV0P2990**

2) Lithium battery, 3.6V 2000mAh

<Caution>
This battery is categorized as hazardous substance, and you may be required to present an application of hazardous substance when you transport by air (both passenger and cargo airlines).

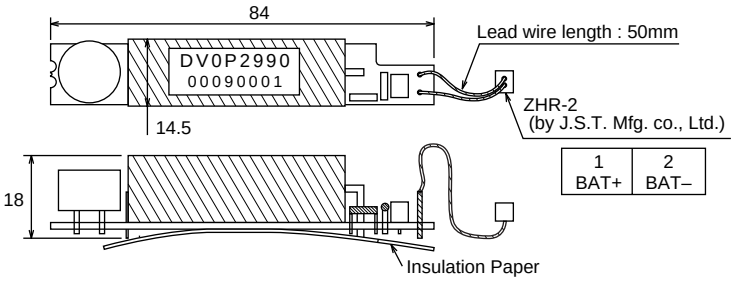

Battery holder for absolute encoder

[unit: mm]

1) Part No. **DV0P4430**

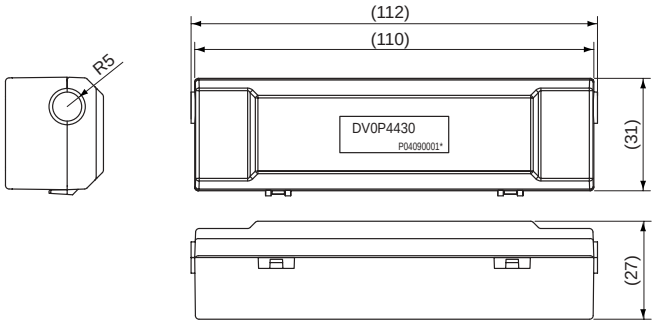

When you make your own cable for 17-bit absolute encoder

When you make your own cable for 17-bit absolute encoder, connect the optional battery for absolute encoder, DV0P2990 as per the wiring diagram below. Connector of the battery for absolute encoder to be provided by customer.

<Cautions>
Install and fix the battery securely. If the installation and fixing of the battery is not appropriate, it may cause the wire breakdown or damage of the battery.
Refer to the instruction manual of the battery for handling of the battery.

• where to install the battery
(1) indoors, where the products are not subjected to rain or direct sun beam
(2) where the products are not subjected to corrosive atmospheres such as hydrogen sulfide, sulfurous acid, chlorine, ammonia, chloric gas, acid, alkaline, salt and so on, and free from splash of inflammable gas, grinding oil, oil mist, iron powder or chips and etc.
(3) well-ventilated and humid and dust free place
(4) vibration-free place

Wiring Diagram

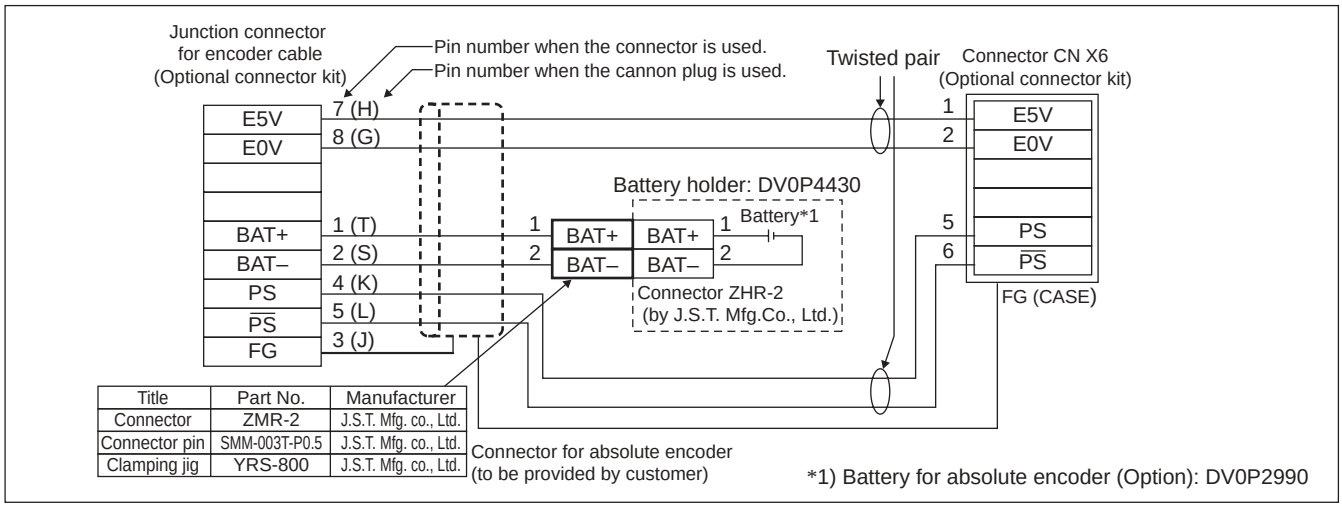

Title	Part No.	Manufacturer
Connector	ZMR-2	J.S.T. Mfg. co., Ltd.
Connector pin	SMM-003T-P0.5	J.S.T. Mfg. co., Ltd.
Clamping jig	YRS-800	J.S.T. Mfg. co., Ltd.

Recommended components

Surge absorber for motor brake

Motor	Surge absorber for motor brake	
	Part No. (Manufacturer's)	Manufacturer
MSMD 50W to 750W	Z15D271	Ishizuka Electronics Co.
MAMA 100W to 750W	Z15D151	Ishizuka Electronics Co.
MHMA 2.0kW to 7.5kW		
MGMA 900W to 2.0kW		
MSMA 1.0kW to 5.0kW		
MDMA 4.0kW to 7.5kW		
MFMA 1.5kW		
MGMA 3.0kW to 6.0kW		
MDMA 1.0kW to 3.0kW	TND09V-820KB00AAA0 (old type:TNR9V820K)	Nippon Chemi-Con Co.
MFMA 400W		
MFMA 2.5kW to 4.5kW		
MHMA 500W to 1.5kW		

List of Manufactures for peripheral equipments (reference only)

Peripheral components	Manufacturer	Tel No. / Home Page
Circuit breaker Magnetic contactor Surge absorber	Automation Controls Company Panasonic Electric Works, Co.,Ltd	81-6-6908-1131 http://panasonic-denko.co.jp/ac
Regenerative resistor	Iwaki Musen Kenkyusho Co., Ltd.	81-44-833-4311 http://www.iwakimusen.co.jp/
Surge absorber for holding brake	Nippon Chemi-Con Co.	81-3-5436-7608 http://www.chemi_con.co.jp/
	Ishizuka Electronics Corp.	81-3-3621-2703 http://www.semitec.co.jp/
Noise filter for signal lines	TDK Corp.	81-3-5201-7229 http://www.tdk.co.jp/
Surge absorber/Noise filter	Okaya Electric Industries Co. Ltd.	81-3-4544-7030 http://www.okayatec.co.jp/
Connector	Japan Aviation Electronics Industry, Ltd.	81-3-3780-2717 http://www.jae.co.jp
	Sumitomo 3M	81-3-5716-7290 http://www.mmmco.jp
	Tyco Electronics AMP k.k,	81-44-844-8111 http://www.tycoelectronics.com/japan/amp
	Japan Molex Inc.	81-462-65-2313 http://www.molex.co.jp
	Hirose Electric Co., Ltd.	81-3-3492-2161 http://www.hirose.co.jp/
	J.S.T. Mfg. Co., Ltd.	81-45-543-1271 http://www.jst-mfg.com/index_i.html
Cable	Daiden Co., Ltd.	81-3-5805-5880 http://www.dyden.co.jp/
Feed back scale	Mitutoyo Corp.	81-44-813-5410 http://www.mitutoyo.co.jp
	Sony Manufacturing Systems Corp.	81-3-3490-3920 http://www.sonysms.co.jp/

* The above list is for reference only. We may change the manufacturer without notice.

Information

Index

Setup support software "PANATERM" ---------- F2
Motor capacity selection software ---------- F3
Option selection software ---------- F4
Guide to the International System of Units (SI) ---------- F5
Selecting Motor Capacity ---------- F7
Request Sheet for Motor Selection ---------- F13
Connection between driver and controller ---------- F21
Index ---------- F31
Sales Office ---------- F48

Setup support software DV0P4460

Setup support software "PANATERM" for MINAS series AC servo motor & Driver

The PANATERM assists users in setting parameters, monitoring control conditions, setup support, and analyzing mechanical operation data on the PC screen, when installed in a commercially available personal computer, and connected to the MINAS series through the RS232 serial interface.

Basic function

Parameter setup

- After a parameter is defined on the screen, it will be sent to the driver immediately.
- Once you register parameters you frequently use, they can be easily set up on the screen.

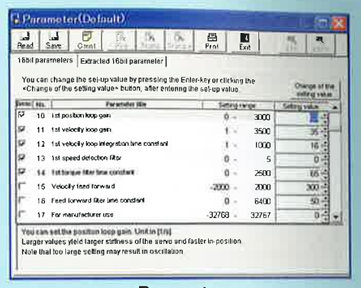

Parameter

Monitoring control conditions

Monitor

- Control conditions: Control mode, velocity, torque, error and warning
- Driver input signal
- Load conditions: Total count of command/feedback pulses, Load ratio, Regenerative resistor load ratio

Alarm

- Displays the numbers and contents of the current alarm and up to 14 error events in the past.
- Clears the numbers and contents of the current alarm and up to 14 error events in the past.

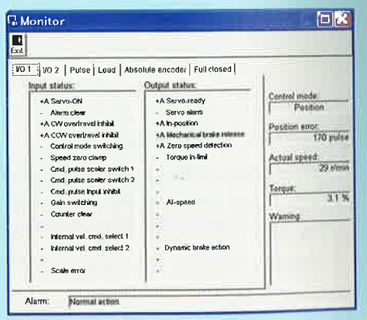

Monitor

Setup

Auto tuning

- Gain adjustment and inertia ratio measurement

Graphic waveform display

- The graphic display shows command velocity, actual velocity, torque, and error waveforms.

Absolute encoder setup

- Clears absolute encoder at the origin.
- Displays single revolution/multi-revolution data.
- Displays absolute encoder status.

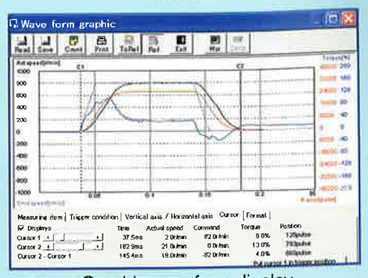

Graphic waveform display

Analysis of mechanical operation data

Frequency analysis

- Measures frequency characteristics of the machine, and displays Bode diagram.

Hardware configuration

[Personal computer] ・CPU : Pentium 100MHz or more ・Memory : 16MB or more (32MB recommended)
・Hard disk capacity (vacancy of 25MB or more recommended) ・OS : Windows®98, Windows®Me, Windows®2000, Windows®XP (US version)
・Communication speed of serial communication port : 2400bps or more (The software may not operate normally using USB-to-Serial adapter.)
[Display] ・Resolution : 640*480 (VGA) or more (desirably 1024*768) ・Number of colors : 256colors or more
[CD-ROM drive] ・CD-ROM drive operable on the above-mentioned personal computer

Motor capacity selection software

AC servo motor capacity selection software

We have prepared PC software "M-SELECT" for AC servo motor capacity selection. Consult our sales representative or authorized distributor.

Three-step selection

1. Select components and specified values

Select appropriate mechanical parameter items and fill them with parameter values derived from the real machine. To simulate the target machine as practical as possible, use maximum number of parameters available.

2. Enter operation pattern

Input the planned operation pattern that will contain [speed and rotation standard] or [absolute position standard] with optional settings such as S-acceleration/deceleration.

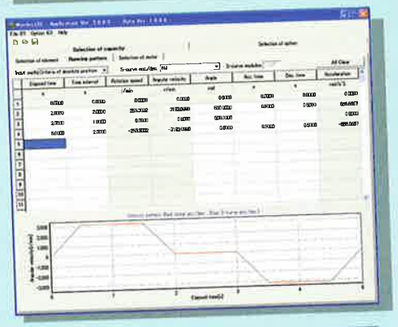

3. Select the motor

When the data required in step 1 and 2 above have been input, the software lists the motors, which will be appropriate to use with your machine. Select the motor that is best suitable for your machine application.

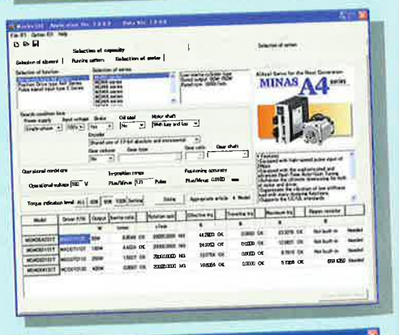

Details of motor

Once the motor is selected, specifications of the motor and amplifier, and details of reason for determination are displayed and may be printed out.

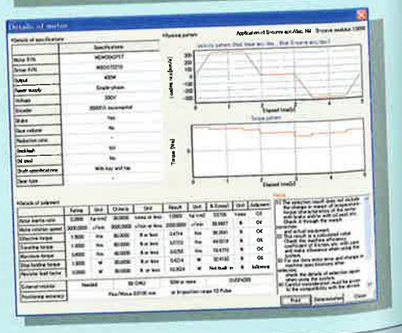

Option selection software

Option selection software for AC servo motor MINAS series

We have prepared PC software to enable fast, easy, and correct option selection, a complicated job without the software.

Two procedures for option selection

1. Selection according to driver series and motor type

Suitable option can be selected by selecting driver series, motor type and motor specification through pulldown menu.

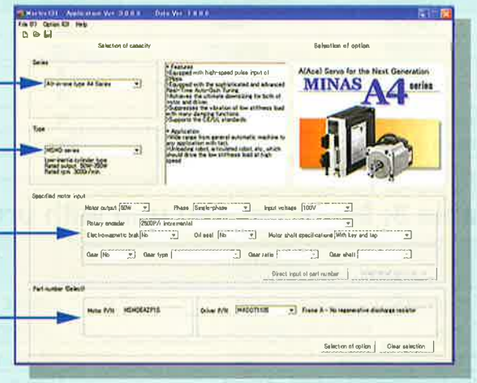

2. Entry of model number

If you know the model number based on the servo motor and driver currently used, enter the model number.

Result of selection

Tab sheet specific to each of option model numbers is used for easier identification of the desired option.

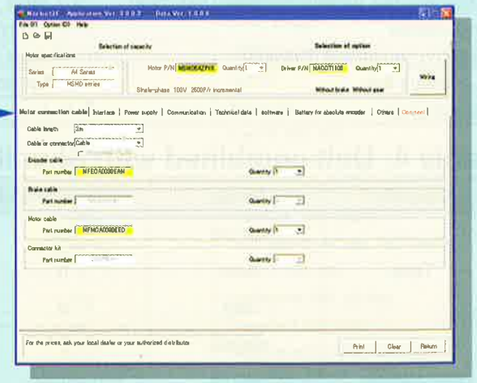

* When you are using the motor capacity selection software, simply press [Option Selection] tab and the screen as shown right will appear.

Guide to the International System of Units (SI)

Organization of the system of units

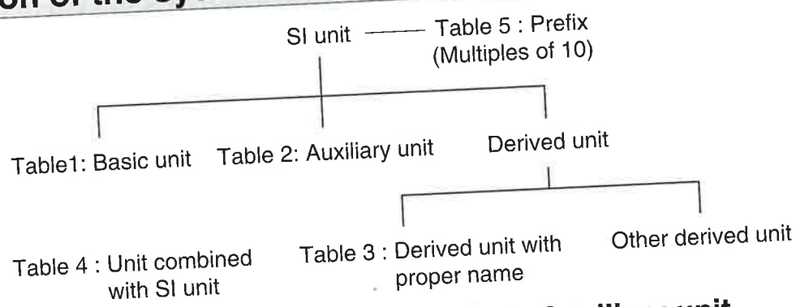

Table1: Basic unit

Quantity	Name of unit	Symbol of unit
Length	meter	m
Weight	kilogram	kg
Time	second	s
Current	ampere	A
Thermodynamic temperature	kelvin	K
Amount of substance	mol	mol
Luminous intensity	candela	cd

Table 2: Auxiliary unit

Quantity	Name of unit	Symbol of unit
Plane angle	radian	rad
Solid angle	steradian	sr

Table 3: Major derived unit with proper name

Quantity	Name	Symbol of unit	Derivation from basic unit, auxiliary unit or other derived unit
Frequency	hertz	Hz	$1Hz=1s^{-1}$
Force	newton	N	$1N=1kg\text{-}m/s^2$
Pressure, Stress	pascal	Pa	$1Pa=1N/m^2$
Energy, Work, Amount of heat	joule	J	1J=1N-m
Amount of work, Work efficiency, Power, Electric power	watt	W	1W=1J/s
Electric charge, Amount of electricity	coulomb	C	1C=1A-s
Electric potential, Potential difference, Voltage, Electromotive force	volt	V	1V=1J/C
Electrostatic capacity, Capacitance	farad	F	1F=1C/V
Electric resistance	ohm	Ω	$1\Omega=1V/A$
Electric conductance	siemens	S	$1S=1\Omega^{-1}$
Magnetic flux	weber	Wb	1Wb=1V-s
Magnetic flux density, Magnetic induction	tesla	T	$1T=1Wb/m^2$
Inductance	henry	H	1H=1Wb/A
Degree centigrade (Celsius)	degree centigrade (Celsius) / degree	°C	t°C=(t+273.15)K
Luminous flux	lumen	lm	1lm=1cd-sr
Illuminance	lux	lx	$1lx=1lm/m^2$

Table 4: Unit combined with SI unit

Quantity	Name	Symbol of unit
Time	minute	min
	hour	h
	day	d
Plane angle	degree	°
	minute	'
	second	"
Volume	liter	l, L
Weight	ton	t

Table 5: Prefix

Multiples powered to unit	Prefix Name	Prefix Symbol
10^{18}	exa	E
10^{15}	peta	P
10^{12}	tera	T
10^{9}	giga	G
10^{6}	mega	M
10^{3}	kilo	k
10^{2}	hecto	h
10	deca	da
10^{-1}	deci	d
10^{-2}	centi	c
10^{-3}	milli	m
10^{-6}	micro	μ
10^{-9}	nano	n
10^{-12}	pico	p
10^{-15}	femto	f
10^{-18}	atto	a

Major compatible unit

Quantity	Symbol of conventional unit	Symbol of SI unit and compatible unit	Conversion value
Length	μ (micron)	μ m	1μ=1μm (micrometer)
Acceleration	Gal	m/s^2	$1Gal=10\text{-}2m/s^2$
	G	m/s^2	$1G=9.806\ 65m/s^2$
Frequency	c/s, c	Hz	1c/s=Hz
Revolving speed, Number of revolutions	rpm	s^{-1} or min^{-1}, r/min	$1rpm=1min^{-1}$
Weight	kgf	–	Same value
Mass	–	kg	
Weight flow rate	kgf/s	–	Same value
Mass flow rate	–	kg/s	
Specific weight	kgf/m^3	–	Same value
Density	–	kg/m^3	
Specific volume	m^3/kgf	m^3/kg	Same value
Load	kgf	N	1kgf=9.806 65N
Force	kgf	N	1kgf=9.806 65N
	dyn	N	$1dyn=10^{-5}N$
Moment of force	kgf-m	N-m	1kgf-m=9.806 N•m
Pressure	kgf/cm^2	Pa, bar (2) or kgf/cm^2	$1kgf/cm^2=9.806\ 65 \times 10^4Pa=0.980\ 665bar$
	at (Engineering atmospheric pressure)	Pa	$1at=9.806\ 65 \times 10^4Pa$
	atm (Atmospheric pressure)	Pa	$1atm=1.013\ 25 \times 10^5Pa$
	mH_2o, mAq	Pa	$1mH_2O=9.806\ 65 \times 10^3Pa$
	mmHg	Pa or mmHg (2)	1mmHg=133.322Pa
	Torr	Pa	
Stress	kgf/mm^2	Pa or N/m^2	$1kgf/mm^2=9.806\ 65 \times 10^4Pa$ $=9.806\ 65 \times 10^6N/m^2$
	kgf/cm^2	Pa or N/m^2	$1kgf/cm^2=9.806\ 65 \times 10^4Pa$ $=9.806\ 65 \times 10^4N/m^2$
Elastic modulus	kgf/m^2	Pa or N/m^2	$1kgf/m^2=9.806\ 65Pa=9.806\ 65N/m^2$ $1kgf/cm^2=9.806\ 65 \times 10^4N/m^2$
Energy, Work	kgf-m	J (joule)	1kgf•m=9.806 65J
	erg	J	$1erg=10^7J$
Work efficiency, Power	kgf-m/s	W (watt)	1kgf-m/s=9.806 65W
	PS	W	1PS=0.735 5kW
Viscosity	PP	Ps-s	1P=0.1Pa-s
Kinetic viscosity	St	mm^2/s	$10^{-2}St=1mm^2/s$
Thermodynamic temperature	K	K (kelvin)	1K=1K
Temperature interval	deg	K (3)	1deg=1K
Amount of heat	cal	J	1cal=4.186 05J
Heat capacity	cal/°C	J/K (3)	1cal/°C=4.186 05J/K
Specific heat, Specific heat capacity	cal/ (kgf•°C)	cal/ (kgf•K)(3)	1cal/ (kgf•°C)=4.186 05J/ (kg•K)
Entropy	cal/K	J/K	1cal/K=4.186 05J/K
Specific entropy	cal/ (kgf•K)	J/(kg•K)	1cal/ (kgf•K)=4.186 05J/ (kg•K)
Internal energy (Enthalpy)	cal	J	1cal=4.186 05J
Specific internal energy (Specific enthalpy)	cal/kgf	J/kg	1cal/kgf=4.186 05J/kg
Heat flux	cal/h	W	1kcal/h=1.162 79W
Heat flux density	cal/ ($h•m^2$)	W/m^2	1kcal ($h•m^2$)=1.162 79W/m^2
Thermal conductivity	cal/ (h•m•°C)	W/ (m•K) (3)	1kcal (h•m•°C)=1.162 79W/ (m•K)
Coefficient of thermal conductivity	cal/ ($h•m^2$•°C)	W/ (m^2•K) (3)	1kcal (h•m•°C)=1.162 79W/ (m^2•K)
Intensity of magnetic field	Oe	A/m	$1Oe=10^2/(4\pi)A/m$
Magnetic flux	Mx	Wb (weber)	$1Mx=10^{-8}Wb$
Magnetic flux density	Gs,G	T (tesla)	$1Gs=10^{-4}T$

Note
(1) Applicable to liquid pressure. Also applicable to atmospheric pressure of meteorological data, when "bar" is used in international standard.
(2) Applicable to scale or indication of blood pressure manometers.
(3) "°C" can be substituted for "K".

Selecting Motor Capacity

Flow of motor selection

1. Definition of mechanism to be driven by motor.

Define details of individual mechanical components (ball screw length, lead and pulley diameters, etc.)

<Typical mechanism>

Ball screw mechanism

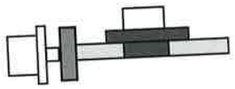

Belt mechanism

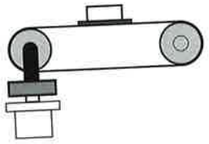

Rack & pinion, etc.

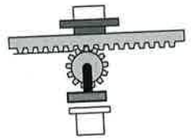

2. Definition of operating pattern.

Acceleration/deceleration time, Constant-velocity time, Stop time, Cycle time, Travel distance

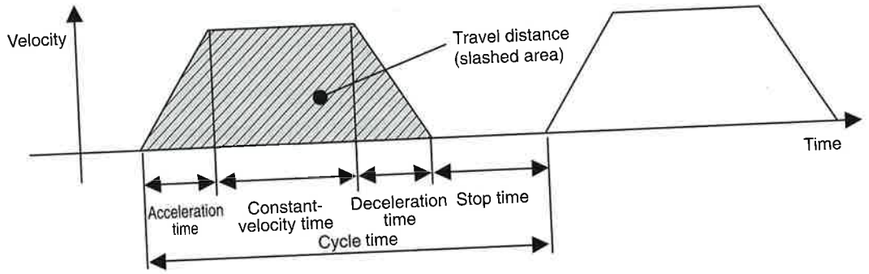

Note) Selection of motor capacity significantly varies depending on the operating pattern.
The motor capacity can be reduced if the acceleration/deceleration time and stop time are set as long as possible.

3. Calculation of load inertia and inertia ratio.

Calculate load inertia for each mechanical component. (Refer to "General inertia calculation method" described later.)

Divide the calculated load inertia by the inertia of the selected motor to check the inertia ratio.

For calculation of the inertia ratio, note that the catalog value of the motor inertia is expressed as "x 10^{-4}kg·m^2".

4. Calculation of motor velocity

Calculate the motor velocity from the moving distance, acceleration / deceleration time and constant-velocity time.

5. Calculation of torque

Calculate the required motor torque from the load inertia, acceleration/deceleration time and constant-velocity time.

6. Calculation of motor

Select a motor that meets the above 3 to 5 requirements.

Description on the items related to motor selection

1. Torque

(1) Peak torque

Indicate the maximum torque that the motor requires during operation (mainly in acceleration and deceleration steps). The reference value is 80% or less of the maximum motor torque. If the torque is a negative value, a regenerative discharge resistor may be required.

(2) Traveling torque, Stop holding torque

Indicates the torque that the motor requires for a long time. The reference value is 80% or less of the rated motor torque. If the torque is a negative value, a regenerative discharge resistor may be required.

Traveling torque calculation formula for each mechanism

Ball screw mechanism

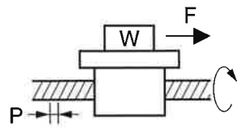

Traveling torque $T_f = \frac{P}{2\pi\eta}(\mu g W + F)$

W : Weight [kg]
P : Lead [m]
F : External force [N]
η : Mechanical efficiency
μ : Coefficient of friction
g : Acceleration of gravity 9.8[m/s^2]

Belt mechanism

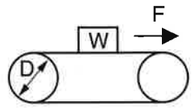

Traveling torque $T_f = \frac{D}{2\pi\eta}(\mu g W + F)$

W : Weight [kg]
P : Pulley diameter [m]
F : External force [N]
η : Mechanical efficiency
μ : Coefficient of friction
g : Acceleration of gravity 9.8[m/s^2]

(3) Effective torque

Indicates a root-mean-square value of the total torque required for running and stopping the motor per unit time. The reference value is approx. 80% or less of the rated motor torque.

$$T_{rms} = \sqrt{\frac{T_a^2 \times t_a + T_f^2 \times t_b + T_d^2 \times t_d}{t_c}}$$

T_a : Acceleration torque [N·m]
T_f : Traveling torque [N·m]
T_d : Deceleration torque [N·m]
t_a : Acceleration time [s]
t_b : Constant-velocity time [s]
t_d : Deceleration time [s]
t_c : Cycle time [s] (Run time + Stop time)

2. Motor velocity

Maximum velocity

Maximum velocity of motor in operation: The reference value is the rated velocity or lower value.

When the motor runs at the maximum velocity, you must pay attention to the motor torque and temperature rise.

For actual calculation of motor velocity, see "Example of motor selection" described later.

Selecting Motor Capacity

3. Inertia and inertia ratio

Inertia is like the force to retain the current moving condition.
Inertia ratio is calculated by dividing load inertia by rotor inertia.
Generally, for motors with 750 W or lower capacity, the inertia ratio should be "20" or less. For motors with 1000 W or higher capacity, the inertia ratio should be "10" or less.
If you need quicker response, a lower inertia ratio is required.
(For example, when the motor takes several seconds in acceleration step, the inertia ratio can be further increased.)

General inertia calculation method

Shape	J calculation formula	Shape	J calculation formula
Disk 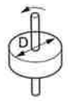	$J=\frac{1}{8}WD^2$ [kg·m²] W : Weight [kg] D : Outer diameter [m]	**Hollow cylinder** 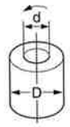	$J=\frac{1}{8}W(D^2+d^2)$ [kg·m²] W : Weight [kg] D : Outer diameter [m] d : Inner diameter [m]
Prism 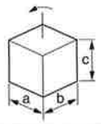	$J=\frac{1}{12}W(a^2+b^2)$ [kg·m²] W : Weight [kg] a, b, c : Side length [m]	**Uniform rod** 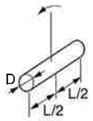	$J=\frac{1}{48}W(3D^2+4L^2)$ [kg·m²] W : Weight [kg] D : Outer diameter [m] L : Length [m]
Straight rod 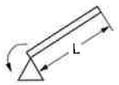	$J=\frac{1}{3}WL^2$ [kg·m²] W : Weight [kg] L : Length [m]	**Separated rod** 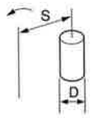	$J=\frac{1}{8}WD^2+WS^2$ [kg·m²] W : Weight [kg] D : Outer diameter [m] S : Distance [m]
Reduction gear 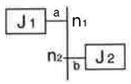	Inertia on shaft "a" $J=J_1+(\frac{n_2}{n_1})^2J_2$ [kg·m²] n_1 : A rotational speed of a shaft [r/min] n_2 : A rotational speed of b shaft [r/min]		
Conveyor 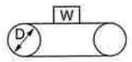	$J=\frac{1}{4}WD^2$ [kg·m²] W : Workpiece weight on conveyor [kg] D : Drum diameter [m] * Excluding drum J	**Ball screw** 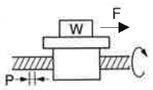	$J=J_B+\frac{W\cdot P^2}{4\pi^2}$ [kg·m²] W : Weight [kg] P : Lead J_B : J of ball screw

If weight (W [kg]) is unknown, calculate it with the following formula:

Weight W[kg]=Density ρ[kg/m³] x Volume V[m³]

Density of each material

Iron ρ=7.9 x 10³ [kg/m³] Aluminum ρ=2.8 x 10³ [kg/m³]

Brass ρ=8.5 x 10³ [kg/m³]

To drive ball screw mechanism

1. Example of motor selection for driving ball screw mechanism

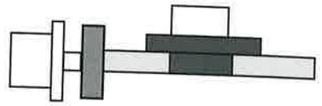

Workpiece weight W_A = 10 [kg]
Ball screw length B_L = 0.5 [m]
Ball screw diameter B_D = 0.02 [m]
Ball screw pitch B_P = 0.02 [m]
Ball screw efficiency B_η = 0.9
Travel distance 0.3 [m]
Coupling inertia $J_C = 10 \times 10^{-6}$ [kg·m²] (Use manufacturer-specified catalog value, or calculation value.)

2. Running pattern :

Acceleration time t_a = 0.1 [s]
Constant-velocity time t_b = 0.8 [s]
Deceleration time t_d = 0.1 [s]
Cycle time t_c = 2 [s]
Travel distance 0.3 [m]

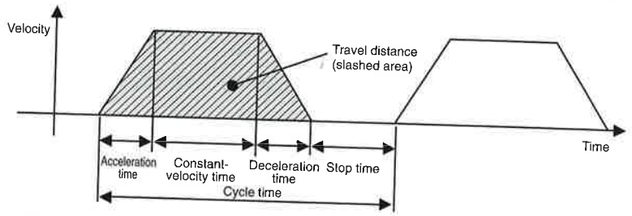

3. Ball screw weight

$$B_W = \rho \times \pi \times \left(\frac{B_D}{2}\right)^2 \times B_L = 7.9 \times 10^3 \times \pi \times \left(\frac{0.02}{2}\right)^2 \times 0.5$$
$$= 1.24 \text{ [kg]}$$

4. Load inertia

$$J_L = J_C + J_B = J_C + \frac{1}{8}B_W \times B_D^2 + \frac{W_A \cdot B_P^2}{4\pi^2}$$
$$= 0.00001 + (1.24 \times 0.02^2)/8 + 10 \times 0.02^2/4\pi^2$$
$$= 1.73 \times 10^{-4} \text{ [kg·m²]}$$

5. Provisional motor selection

In case of 200 W motor : $J_M = 0.17 \times 10^{-4}$ [kg·m²]

6. Calculation of inertia ratio

$J_L / J_M = 1.73 \times 10^{-4} / 0.17 \times 10^{-4}$ Therefore, the inertia ratio is "10.2" (less than "20")
(In case of 100 W motor: $J_M = 0.064 \times 10^{-4}$ Therefore, the inertia ratio is "27.0".)

7. Calculation of maximum velocity (Vmax)

$$\frac{1}{2} \times \text{Acceleration time} \times V_{max} + \text{Constant-velocity time} \times V_{max} + \frac{1}{2} \times \text{Deceleration time} \times V_{max} = \text{Travel distance}$$
$$\frac{1}{2} \times 0.1 \times V_{max} + 0.8 \times V_{max} + \frac{1}{2} \times 0.1 \times V_{max} = 0.3$$
$$0.9 \times V_{max} = 0.3$$
$$= 0.3 / 0.9 = 0.334 \text{ [m/s]}$$

8. Calculation of motor velocity (N [r/min]) **Ball screw lead per resolution: B_P = 0.02 [m]**

$$N = 0.334 / 0.02 = 16.7 \text{ [r/s]}$$
$$= 16.7 \times 60 = 1002 \text{ [min}^{-1}\text{]} < 3000 \text{ [min}^{-1}\text{]}$$ (Rated velocity of 200W motor)

9. Calculation of torque

Traveling torque
$$T_f = \frac{B_P}{2\pi B_\eta}(\mu g W_A + F) = \frac{0.02}{2\pi \times 0.9}(0.1 \times 9.8 \times 10 + 0)$$
$$= 0.035 \text{ [N·m]}$$

Acceleration torque
$$T_a = \frac{(J_L + J_M) \times 2\pi N[r/s]}{\text{Acceleration time [s]}} + \text{Traveling torque}$$
$$= \frac{(1.73 \times 10^{-4} + 0.17 \times 10^{-4}) \times 2\pi \times 16.7}{0.1} + 0.035$$
$$= 0.199 + 0.035 = 0.234 \text{ [N·m]}$$

Information

Selecting Motor Capacity

Deceleration torque $T_d = \dfrac{(J_L + J_M) \times 2\pi N[r/s]}{\text{Deceleration time [s]}}$ – Traveling torque

$= \dfrac{(1.73 \times 10^{-4} + 0.17 \times 10^{-4}) \times 2\pi \times 16.7}{0.1} - 0.035$

$= 0.199 - 0.035 = 0.164$ [N·m]

10. Verification of maximum torque

Acceleration torque = T_a = 0.234 [N·m] < 1.91 [N·m] (Maximum torque of 200 W motor)

11. Verification of effective torque

$$T_{rms} = \sqrt{\frac{T_a^2 \times t_a + T_f^2 \times t_b + T_d^2 \times t_d}{t_c}}$$

$$= \sqrt{\frac{0.234^2 \times 0.1 + 0.035^2 \times 0.8 + 0.164^2 \times 0.1}{2}}$$

= 0.065 [N·m] < 0.64 [N·m] (Rated torque of 200 W motor)

12. Judging from the inertia ratio calculated above, selection of 200 W motor is preferable, although the torque margin is significantly large.

Example of motor selection

Example of motor selection for timing belt mechanism

1.Mechanism

Workpiece weight	W_A =3[kg] (including belt)
Pulley diameter	P_D =0.05[m]
Pulley weight	W_P =0.5[kg] (Use manufacturer-specified catalog value, or calculation value.)
Mechanical efficiency	$B\eta$ = 0.8
Coupling inertia	J_C = 0 (Direct connection to motor shaft)
Belt mechanism inertia	J_B
Pulley inertia	J_P

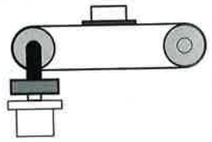

2. Running pattern

Acceleration time	t_a = 0.1[s]
Constant-velocity time	t_b = 0.8[s]
Deceleration time	t_d = 0.1[s]
Cycle time	t_c = 2[s]
Travel distance 1[m]	

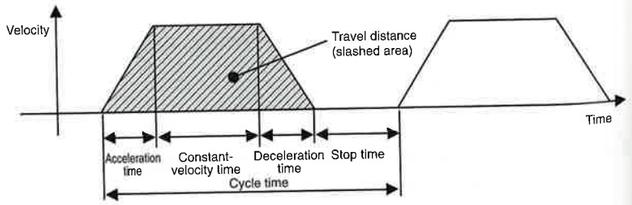

3. Load inertia $J_L = J_C + J_B + J_P$

$= J_C + \frac{1}{4} W_A \times P_D^2 + \frac{1}{8} W_P \times P_D^2 \times 2$

$= 0 + \frac{1}{4} \times 3 \times 0.05^2 + \frac{1}{8} \times 0.5 \times 0.05^2 \times 2$

$= 0.00219 = 21.9 \times 10^{-4}$ [kg·m²]

4. Provisional motor selection

In case of 750 W motor : $J_M = 1.31 \times 10^{-4}$ [kg·m²]

5. Calculation of inertia ratio

$J_L / J_M = 21.9 \times 10^{-4} / 1.31 \times 10^{-4}$ Therefore, the inertia ratio is "16.7" (less than "20")

6. Calculation of maximum velocity (Vmax)

$\frac{1}{2}$ x Acceleration time x Vmax + Constant-velocity time x Vmax + $\frac{1}{2}$ x Deceleration time x Vmax = Travel distance

$\frac{1}{2} \times 0.1 \times V_{max} + 0.8 \times V_{max} + \frac{1}{2} \times 0.1 \times V_{max} = 1$

$0.9 \times V_{max} = 1$

$V_{max} = 1 / 0.9 = 1.111$[m/s]

7. Calculation of motor velocity (N [r/min])

A single rotation of pulley : $\pi \times P_D = 0.157$[m]

N = 1.11 / 0.157 = 7.08[r/s]

= 7.08 x 60 = 424.8[min⁻¹] < 3000[min⁻¹] (Rated velocity of 750 W motor)

8. Calculation of torque

Traveling torque $T_f = \dfrac{P_D}{2\eta}(\mu g W_A + F) = \dfrac{0.05}{2 \times 0.8}(0.1 \times 9.8 \times 3 + 0)$

= 0.092[N·m]

Acceleration torque $T_a = \dfrac{(J_L + J_M) \times 2\pi N[r/s]}{\text{Acceleration time[s]}}$ + Traveling torque

$= \dfrac{(21.9 \times 10^{-4} + 1.31 \times 10^{-4}) \times 2\pi \times 7.08}{0.1} + 0.092$

= 1.032 + 0.092 = 1.124[N·m]

Deceleration torque $T_d = \dfrac{(J_L + J_M) \times 2\pi N[r/s]}{\text{Deceleration time[s]}}$ – Traveling torque

$= \dfrac{(21.9 \times 10^{-4} + 1.31 \times 10^{-4}) \times 2\pi \times 7.08}{0.1} - 0.092$

= 1.032 – 0.092 = 0.94[N·m]

9. Verification of maximum torque

Acceleration torque T_a = 1.124[N·m] < 7.1[N·m] (Maximum torque of 750 W motor)

10. Verification of effective torque

$$T_{rms} = \sqrt{\frac{T_a^2 \times t_a + T_f^2 \times t_b + T_d^2 \times t_d}{t_c}}$$

$$= \sqrt{\frac{1.124^2 \times 0.1 + 0.092^2 \times 0.8 + 0.94^2 \times 0.1}{2}}$$

= 0.333 [N·m] < 2.4 [N·m] (Rated torque of 750 W motor)

11. Judging from the above calculation result, selection of 750W motor is acceptable.

Request Sheet for Motor Selection

Customer Service Technical Support Center,
Motor Company, Panasonic Corporation

Request for Motor Selection Ⅰ : Ball screw drive

1. Driven mechanism and running data

1) Travel distance of the work load per one cycle	ℓ_1:	mm
2) Cycle time	t_0:	s
(Fill in items 3) and 4) if required.)		
3) Acceleration time	t_a:	s
4) Deceleration time	t_d:	s
5) Stopping time	t_s:	s
6) Max. velocity	V:	mm/s
7) External force	F:	kg
8) Positioning accuracy of the work load	±	mm
9) Total weight of the work load and the table	W_A:	kg
10) Power supply voltage		V
11) Diameter of the ball screw		mm
12) Total length of the ball		mm
13) Lead of the ball screw		mm

Running pattern

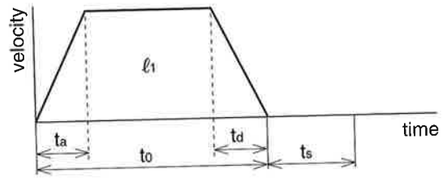

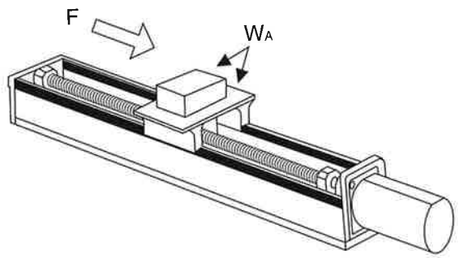

14) Traveling direction (horizontal, vertical etc.) ____

2. Other data

(Fill the details on specific mechanism and its configurations in the following blank.)

Company name :
Department/Section :
Name :
Address :
Tel :
Fax :
E-mail address:

Request Sheet for Motor Selection

Customer Service Technical Support Center,
Motor Company, Panasonic Corporation

Request for Motor Selection Ⅱ : Timing pulley + Ball screw drive

1. Driven mechanism and running data

1) Travel distance of the work load per one cycle	ℓ_1:	mm
2) Cycle time	t_0:	s
(Fill in items 3) and 4) if required.)		
3) Acceleration time	t_a:	s
4) Deceleration time	t_d:	s
5) Stopping time	t_s:	s
6) Max. velocity	V:	mm/s
7) External force	F:	kg
8) Positioning accuracy of the work load	±	mm
9) Total weight of the work load and the table	W_A:	kg
10) Power supply voltage		V
11) Diameter of the ball screw		mm
12) Total length o the ball screw		mm
13) Lead of the ball screw		mm
14) Traveling		

	Motor side	Motor side
15) Diameter of the pulley	D_1: mm	D_2: mm
16) Weight of the pulley	W_1: kg	W_2: kg
(or item 17) and 18))		
17) Width of the pulley	L_1: mm	
18) Material of the pulley		
19) Weight of the belt	W_M: kg	

Running pattern

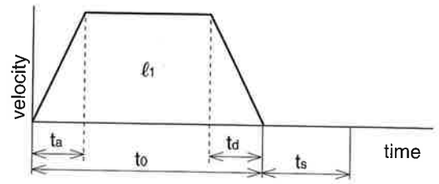

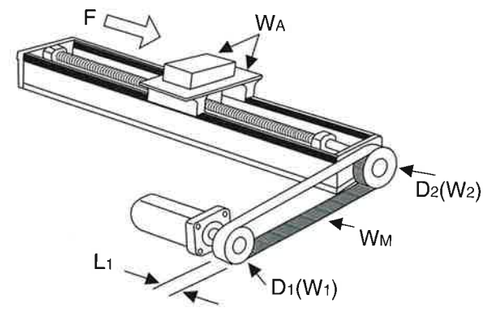

2. Other data

(Fill the details on specific mechanism and its configurations in the following blank.)

Company name :
Department/Section :
Name :
Address :
Tel :
Fax :
E-mail address:

Request Sheet for Motor Selection

Customer Service Technical Support Center,
Motor Company, Panasonic Corporation

Request for Motor Selection Ⅲ : Belt drive

1. Driven mechanism and running data

1) Travel distance of the work load per one cycle	ℓ_1:	mm
2) Cycle time	t_0:	s
(Fill in items 3) and 4) if required.)		
3) Acceleration time	t_a:	s
4) Deceleration time	t_d:	s
5) Stopping time	t_s:	s
6) Max. velocity	V:	mm/s
7) External force	F:	kg
8) Positioning accuracy of the work load	±	mm
9) Total weight of the work load	W_A:	kg
10) Power supply voltage		V
11) Weight of the belt	W_M:	kg
12) Diameter of the driving pulley	D_1:	mm
13) Total weight of the pulley	W_1:	kg

Running pattern

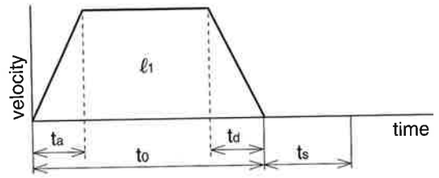

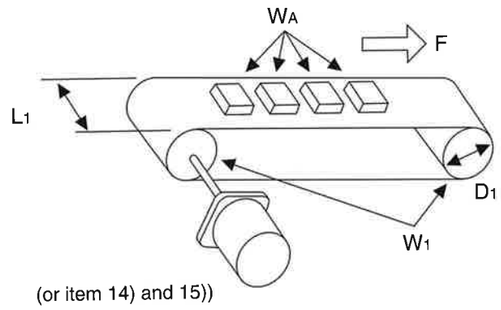

(or item 14) and 15))

14)Width of the pulley	L_1:	mm
15) Material of the pulley		
16) Traveling direction (horizontal, vertical etc.)		

2. Other data

(Fill the details on specific mechanism and its configurations in the following blank.)

Company name :
Department/Section :
Name :
Address :
Tel :
Fax :
E-mail address:

Request Sheet for Motor Selection
Customer Service Technical Support Center,
Motor Company, Panasonic Corporation

Request for Motor Selection Ⅳ : Timing pulley + Belt drive

1. Driven mechanism and running data

1) Travel distance of the work load per one cycle	ℓ_1:	mm
2) Cycle time	t_0:	s
(Fill in items 3) and 4) if required.)		
3) Acceleration time	t_a:	s
4) Deceleration time	t_d:	s
5) Stopping time	t_s:	s
6) Max. velocity	V:	mm/s
7) External force	F:	kg
8) Positioning accuracy of the work load	±	mm
9) Total weight of the work load and the table	W_A:	kg
10) Power supply voltage		V
11) Weight of motor site belt	W_M:	kg

	Motor side	Belt side
12) Diameter of the pully	D_1: mm	D_2: mm
13) Weight of the pulley	W_1: kg	W_2: kg

(or item 14) and 15))

14) Weight of the belt	L_1:	mm
15) Material of the pulley		

	Motor side	Belt side
16) Diameter of the pulley	D_3: mm	D_4: mm
17) Weight of the pulley	W_3: kg	W_4: kg

(or item 18) and 19))

18) Width of the pulley	L_2:	mm
19) Material of the pulley		
20) Weight of the belt	W_L:	kg
21) Traveling direction (horizontal, vertical etc.)		

Running pattern

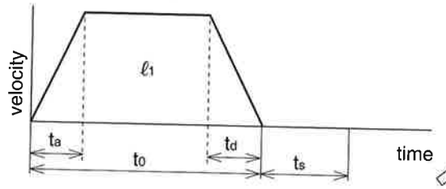

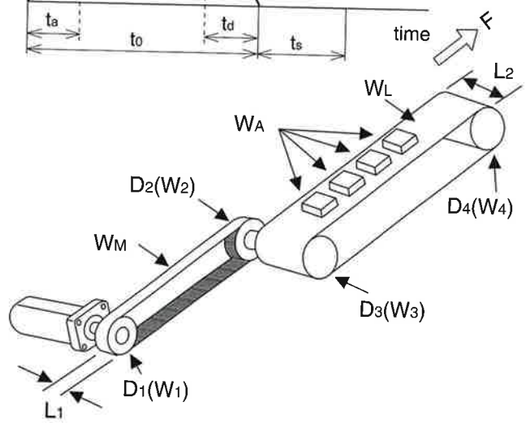

2. Other data

(Fill the details on specific mechanism and its configurations in the following blank.)

Company name :
Department/Section :
Name :
Address :
Tel :
Fax :
E-mail address:

Request for Motor Selection V : Turntable drive

1. Driven mechanism and running data

1) Travel distance of the work load per one cycle	d_1:	deg
2) Cycle time	t_0:	s
(Fill in items 3) and 4) if required.)		
3) Acceleration time	t_a:	s
4) Deceleration time	t_d:	s
5) Stopping time	t_s:	s
6) Max. rotational speed of the table	v:	deg/s
(or)	V:	r/s
7) Positioning accuracy of the work load	±	deg
8) Weight of one work load	W_A:	kg
9) Driving radius of the center of gravity of the	R_1:	mm
10) Diameter of the table	D_1:	mm
11) Mass of the table	W_1:	kg
12) Diameter of the table support	T_1:	mm
13) Power supply voltage		V

14) Dimensions of the work load	Prism	Cylinder
	a: mm	a: mm
	b: mm	b: mm
	c: mm	c: mm

15) Number of work loads: pcs

Running pattern

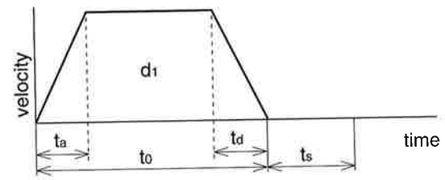

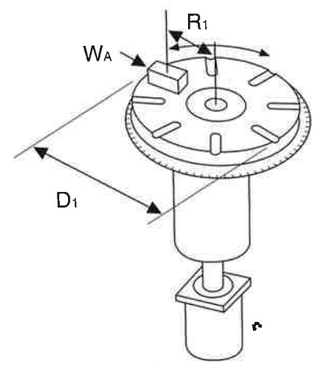

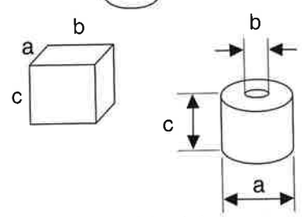

2. Other data

(Fill the details on specific mechanism and its configurations in the following blank.)

Company name :
Department/Section :
Name :
Address :
Tel :
Fax :
E-mail address:

Request for Motor Selection VI : Timing pulley + Turntable drive

1. Driven mechanism and running data

1) Travel distance of the work load per one cycle	d_1:	deg
2) Cycle time	t_0:	s
(Fill in items 3) and 4) if required.)		
3) Acceleration time	t_a:	s
4) Deceleration time	t_d:	s
5) Stopping time	t_s:	s
6) Max. rotating speed of the table	v:	deg/s
(or)	V:	r/s
7) Positioning accuracy of the work load	±	deg
8) Weight of one work load	W_A:	kg
9) Driving radius of the center of gravity of the	R_1:	mm
10) Diameter of the table	D_1:	mm
11) Mass of the table	W_1:	kg
12) Diameter of the table support	T_1:	mm
13) Power supply voltage		V

14) Dimension of the work load	(Prism)	(Cylinder)
	a: mm	a: mm
	b: mm	b: mm
	c: mm	c: mm

15) Number of work loads: pcs

	Motor side	Turntable side
16) Diameter of the pulley	D_2: mm	D_3: mm
17) Weight of the pulley (or item 18) and 19))	W_2: kg	W_3: kg

18) Width of the pulley	L_1: mm
19) Material of the pulley	
20) Weight of the belt	W_M: kg

Running pattern

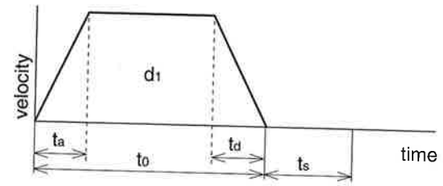

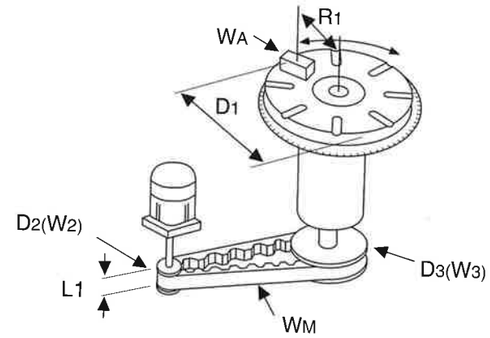

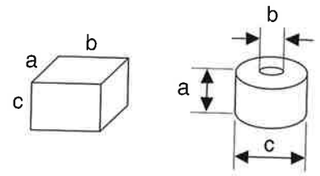

2. Other data

(Fill the details on specific mechanism and its configurations in the following blank.)

Company name :
Department/Section :
Name :
Address :
Tel :
Fax :
E-mail address:

Request for Motor Selection Ⅶ : Roller feed drive

1. Driven mechanism and running data

1) Travel distance of the work load per one cycle	ℓ_1:	mm
2) Cycle time	t_0:	s
(Fill in items 3) and 4) if required.)		
3) Acceleration time	t_a:	s
4) Deceleration time	t_d:	s
5) Stopping time	t_s:	s
6) Max. velocity	v:	mm/s
7) External pulling force	F:	kg
8) Positioning accuracy of the work load	±	mm
9) Total weight of the work load		pcs
10) Power supply voltage		V
11) Diameter of the roller	D_1:	mm
12) Mass of the roller	W_1:	kg

Running pattern

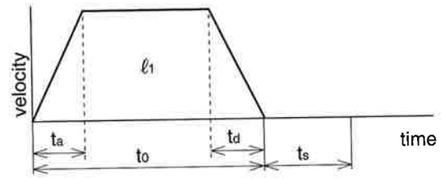

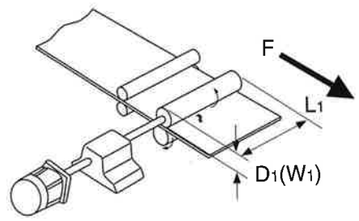

(or item 13) and 14))

13) Width of the roller	L_1:	mm
14) Material of the roller		

2. Other data

(Fill the details on specific mechanism and its configurations in the following blank.)

Company name :
Department/Section :
Name :
Address :
Tel :
Fax :
E-mail address:

Request for Motor Selection Ⅷ : Driving with Rack & Pinion

1. Driven mechanism and running data

1) Travel distance of the work load per one cycle	ℓ_1:	mm
2) Cycle time	t_0:	s
(Fill in items 3) and 4) if required.)		
3) Acceleration time	t_a:	s
4) Deceleration time	t_d:	s
5) Stopping time	t_s:	s
6) Max. velocity	V:	mm/s
7) External force	F:	kg
8) Positioning accuracy of the work load	±	mm
9) Total weight of the work load	W_A:	kg
10) Power supply voltage		V
11) Diameter of the pinion	D_3:	mm
12) Mass of the pinion	W_3:	kg
13) Traveling direction (horizontal, vertical, etc)		

Running pattern

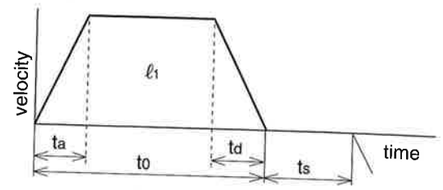

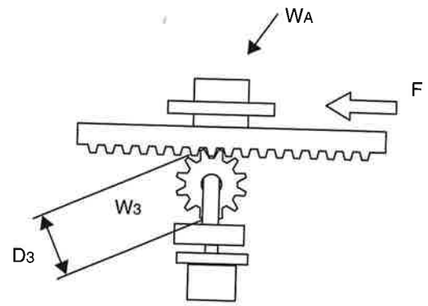

2. Other data

(Fill the details on specific mechanism and its configurations in the following blank.)

Company name :
Department/Section :
Name :
Address :
Tel :
Fax :
E-mail address:

Connection between Driver and Controller

Connection between MINAS A4 and FP2-PP22 AFP2434 (Panasonic Electric Works)

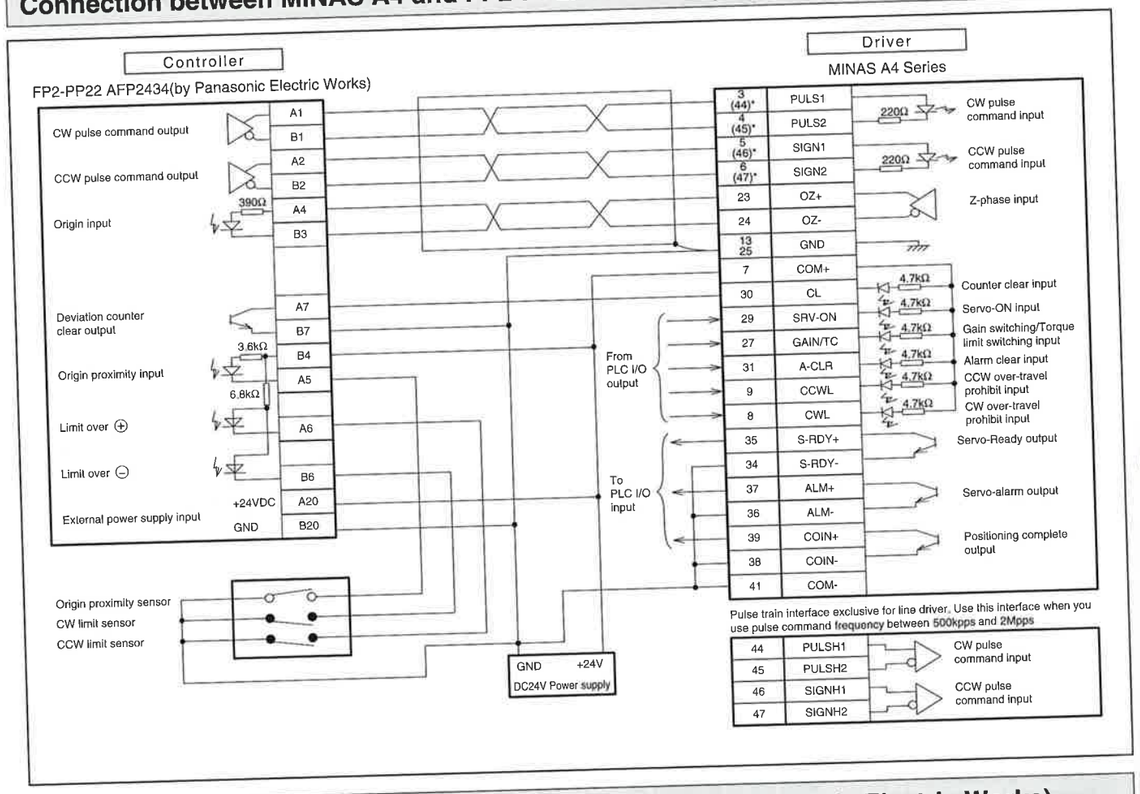

Connection between MINAS E and FP2-PP22 AFP2434 (Panasonic Electric Works)

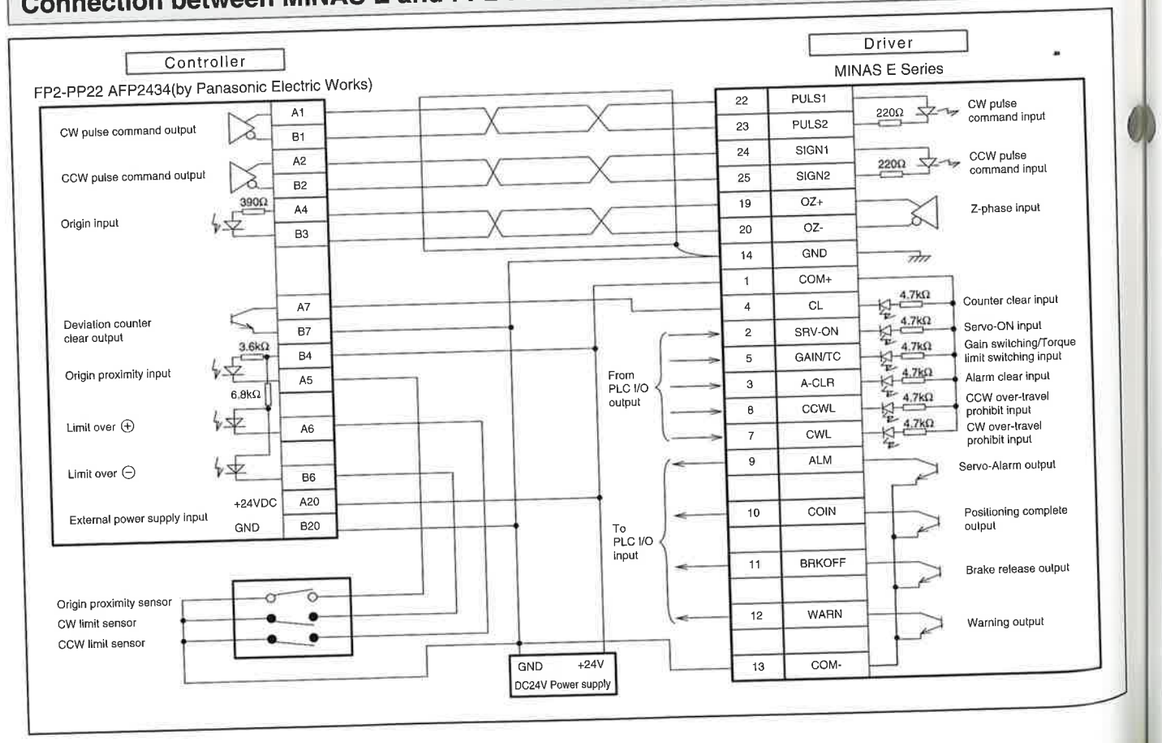

Connection between MINAS A4 and FPG-PP12 AFPG432 (Panasonic Electric Works)

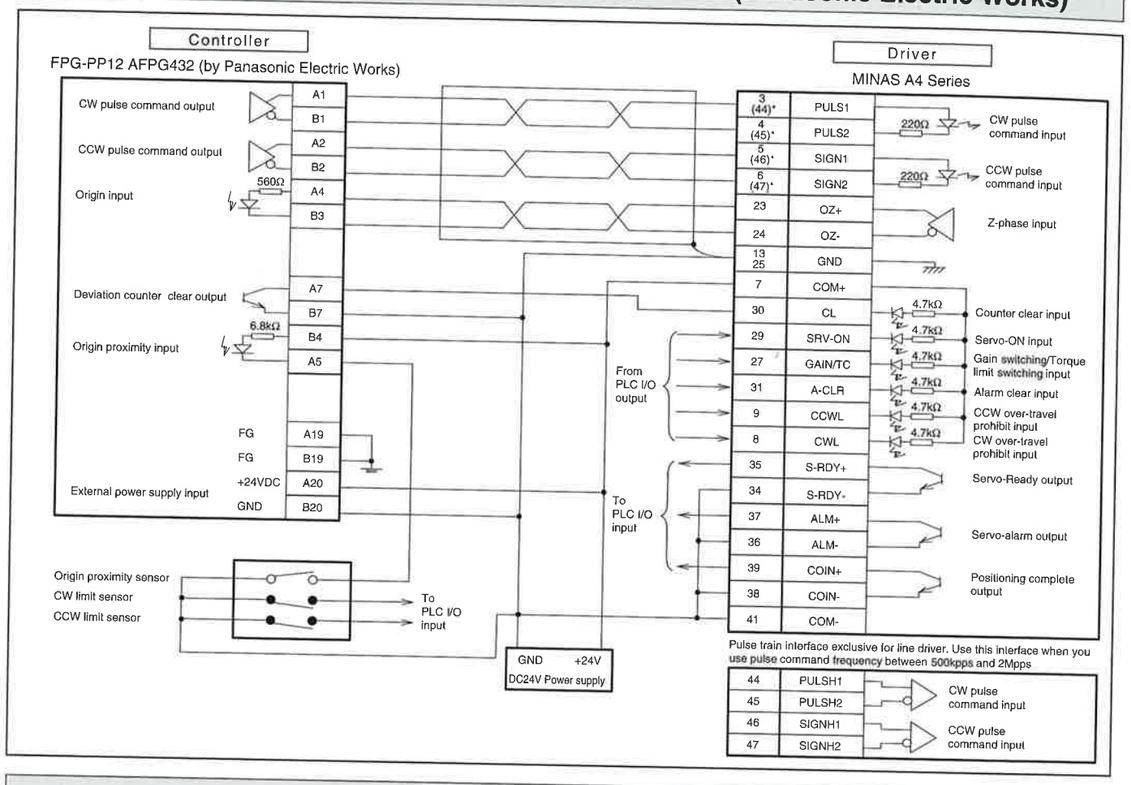

Connection between MINAS E and FPG-PP12 AFPG432 (Panasonic Electric Works)

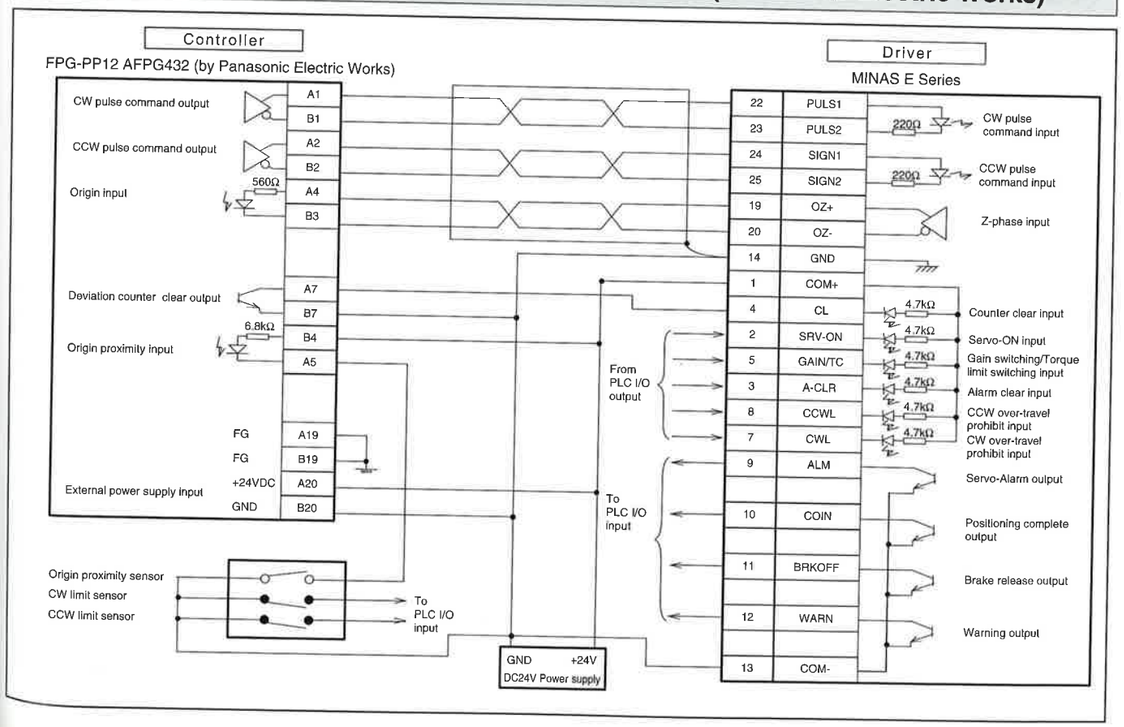

Connection between Driver and Controller

Connection between MINAS A4 and FP2-PP2 AFP2430 (Panasonic Electric Works)

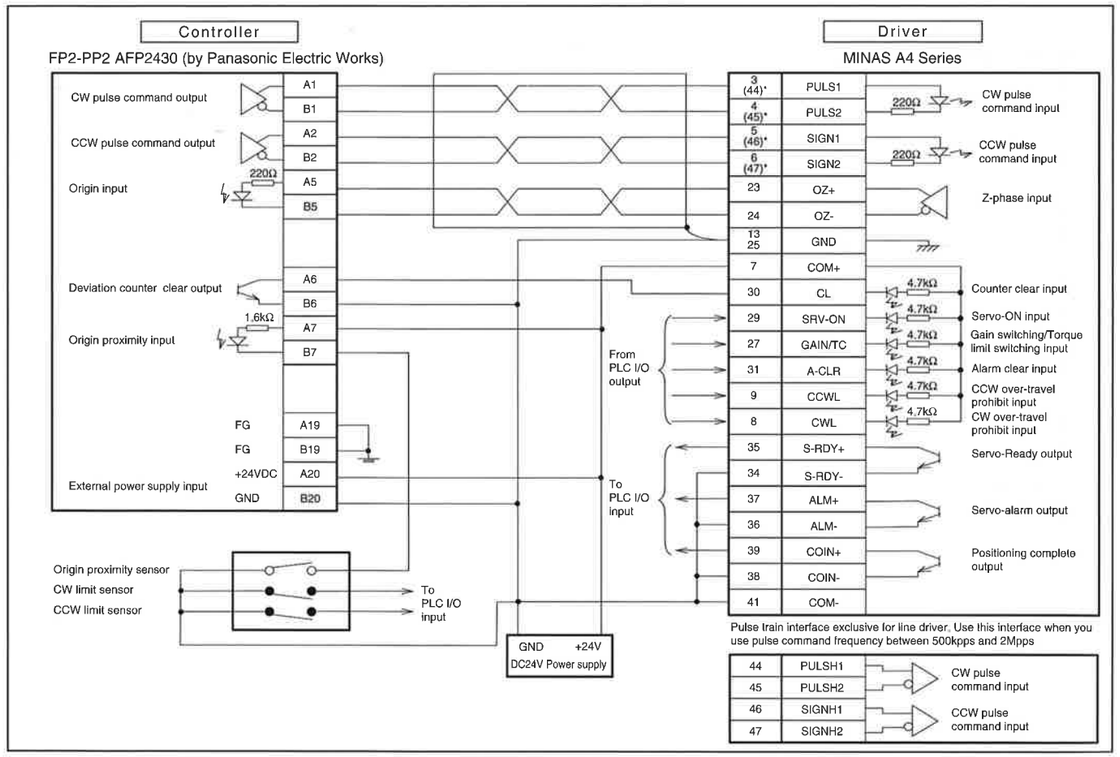

Connection between MINAS E and FP2-PP2 AFP2430 (Panasonic Electric Works)

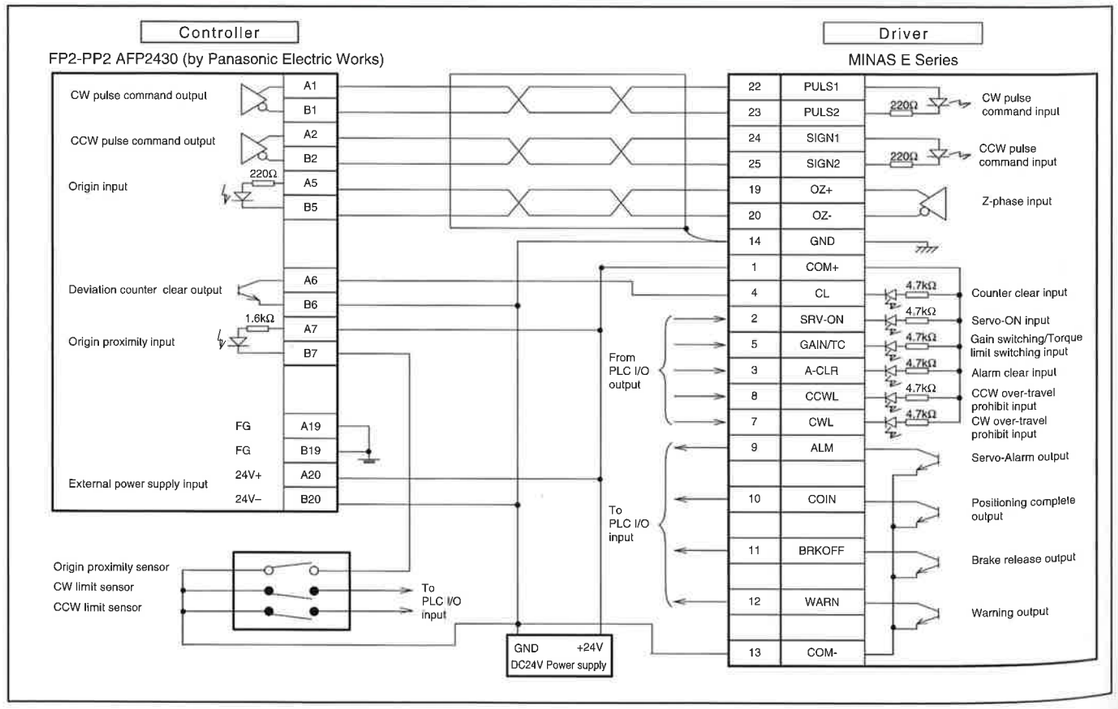

Connection between MINAS A4 and FPG-C32T (FPΣ, Panasonic Electric Works)

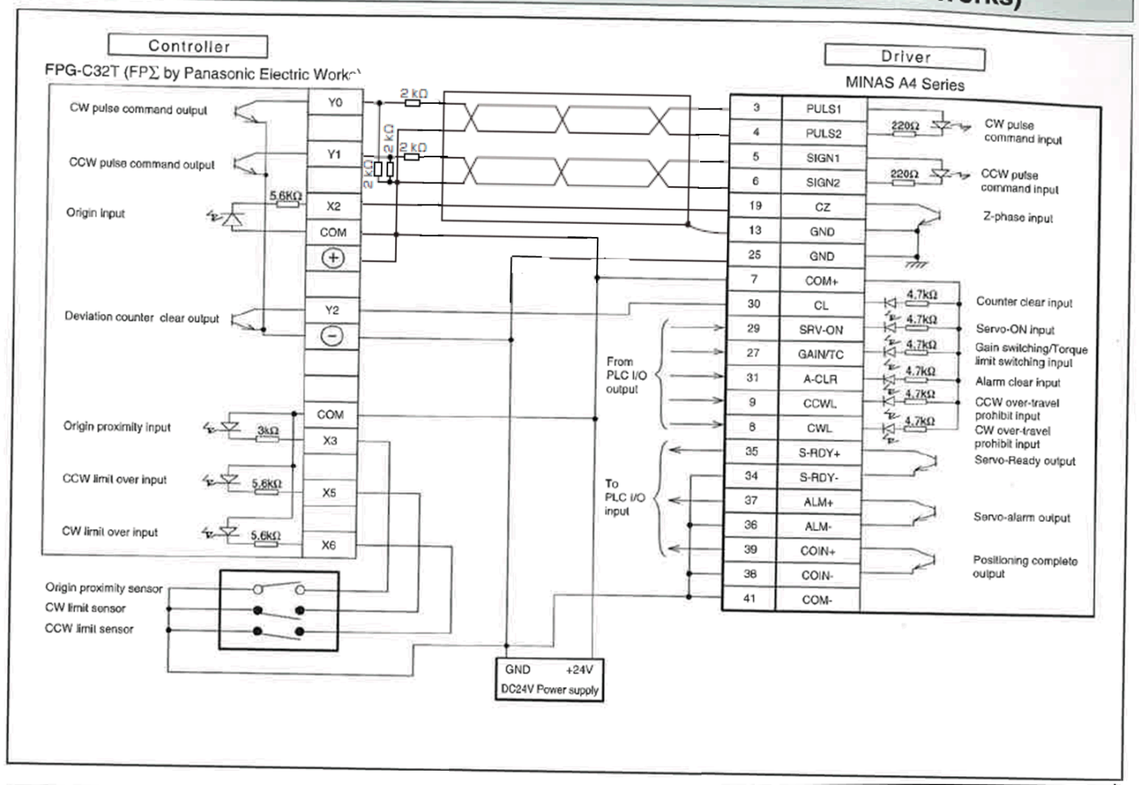

Connection between MINAS E and FPG-C32T (FPΣ, Panasonic Electric Works)

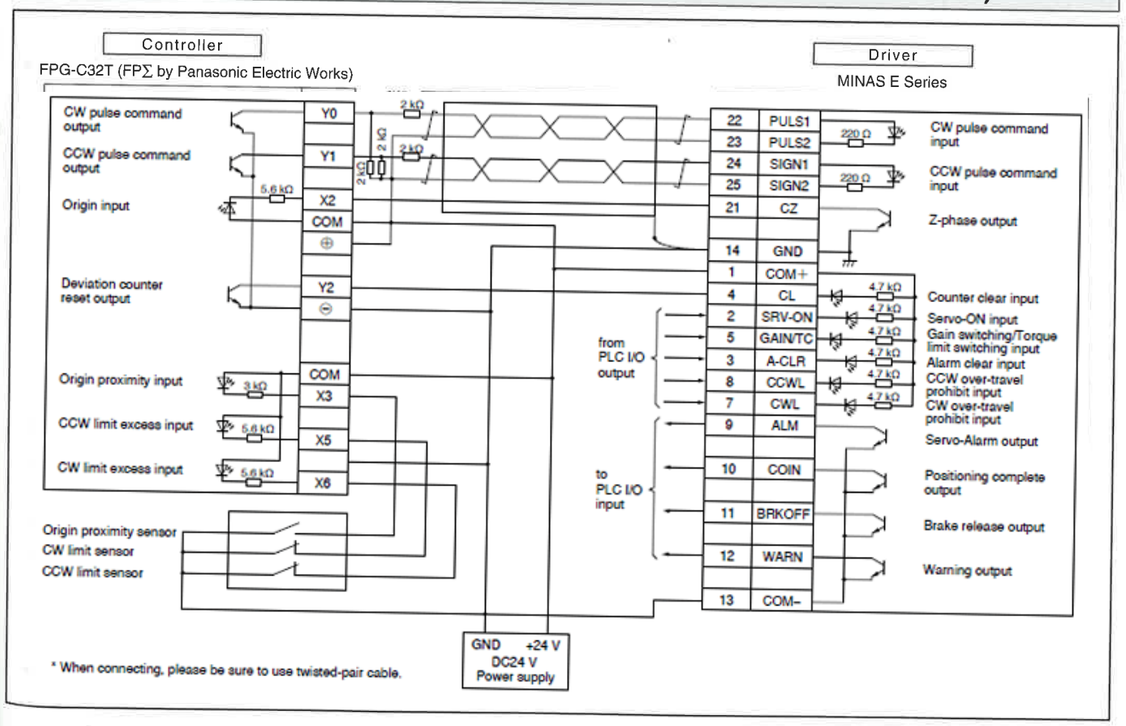

* When connecting, please be sure to use twisted-pair cable.

Connection between Driver and Controller

Connection between MINAS A4 and F3YP14-0N/F3YP18-0N (Yokogawa Electric Corp.)

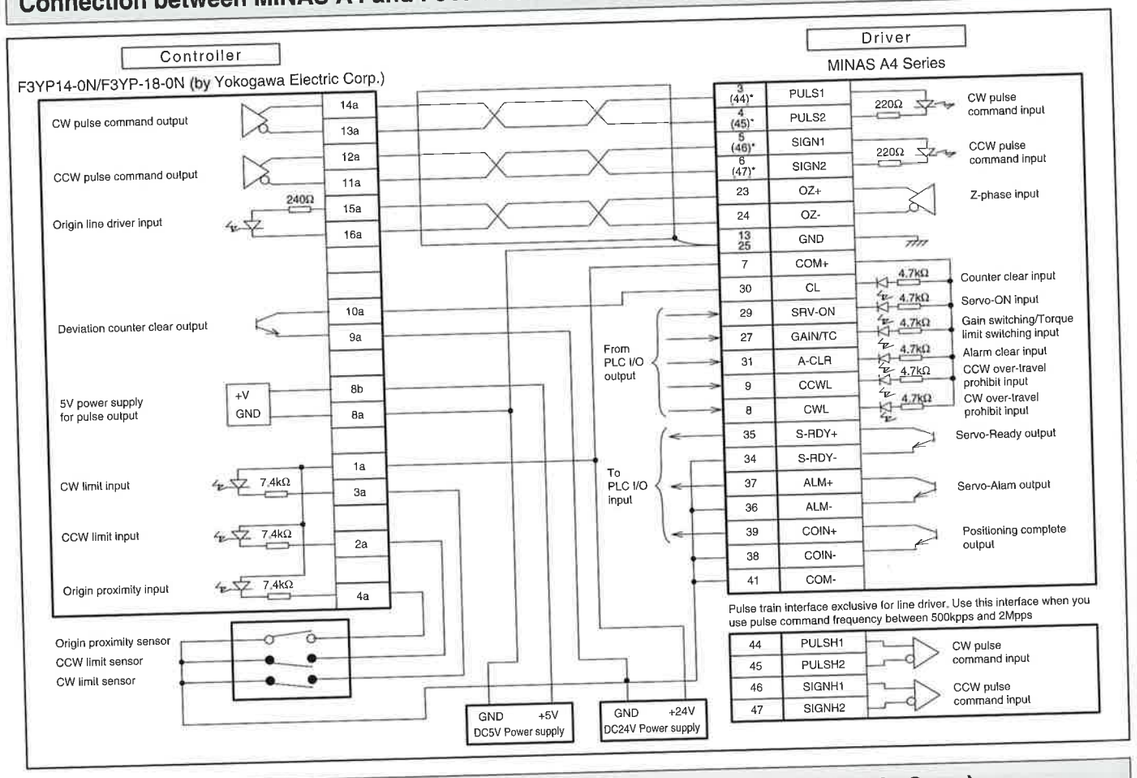

Connection between MINAS E and F3YP14-0N/F3YP18-0N (Yokogawa Electric Corp.)

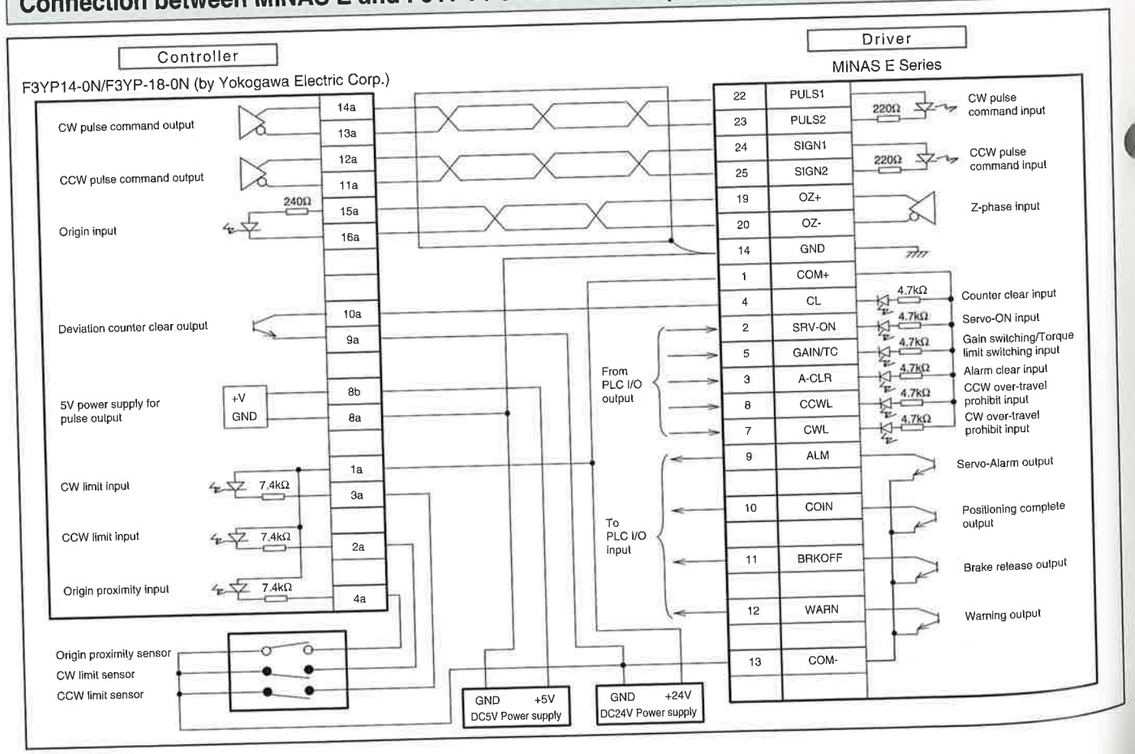

Connection between MINAS A4 and F3NC32-ON/F3NC34-ON (Yokogawa Electric Corp.)

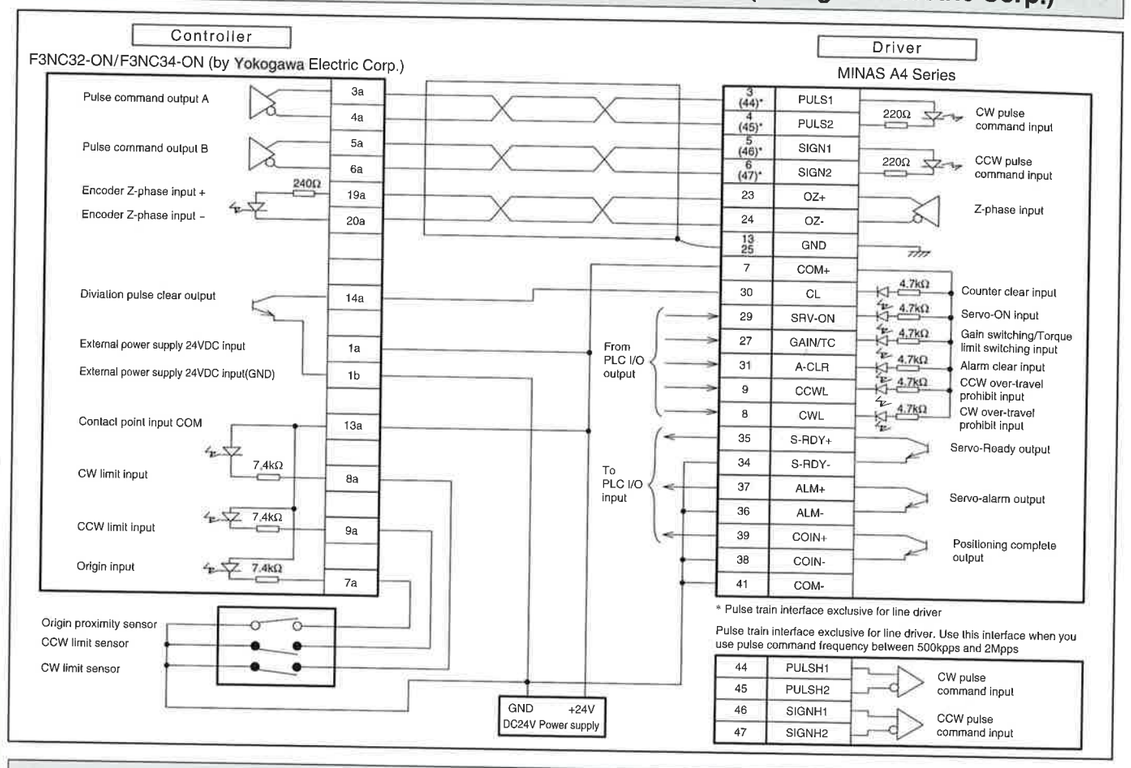

Connection between MINAS E and F3NC32-ON/F3NC34-ON (Yokogawa Electric Corp.)

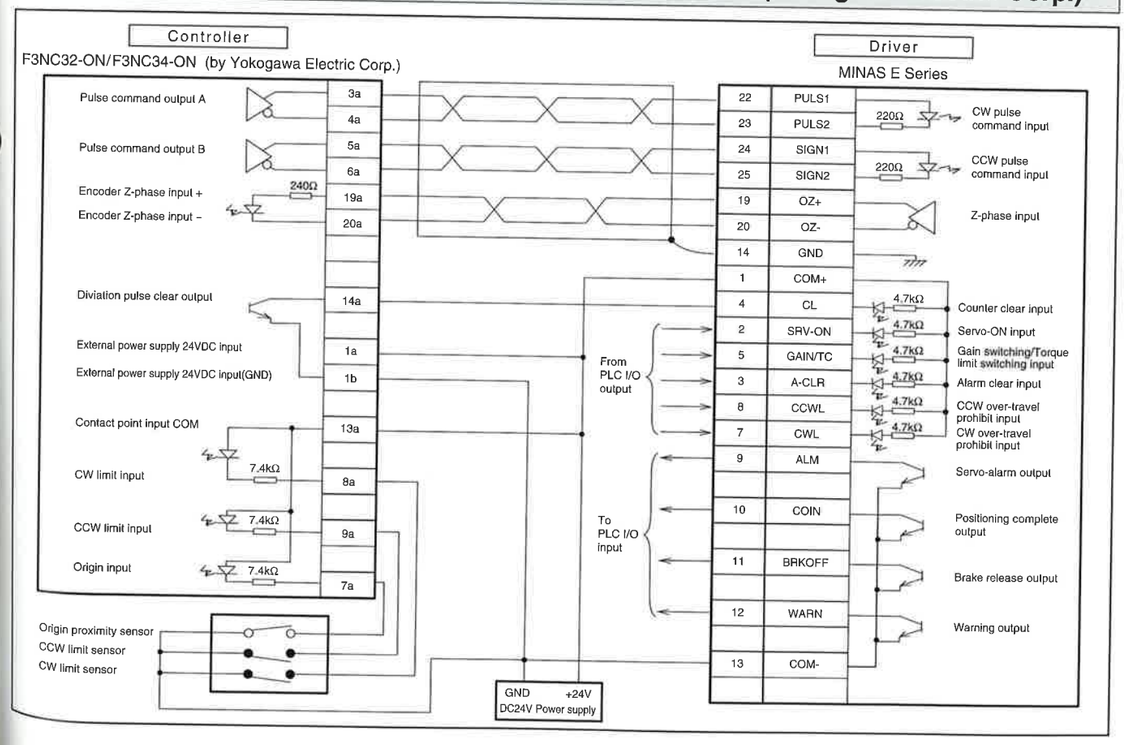

Connection between Driver and Controller

Connection between MINAS A4 and CJ1W-NC113(Omron Corp.)

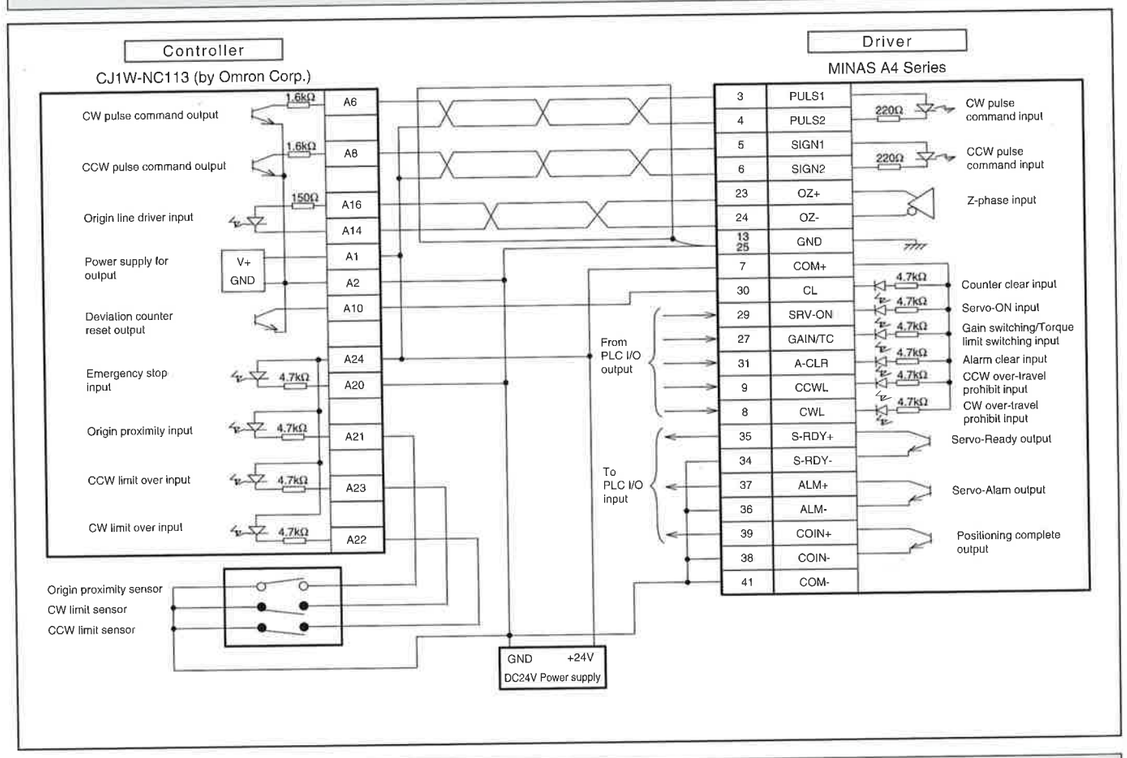

Connection between MINAS E and CJ1W-NC113(Omron Corp.)

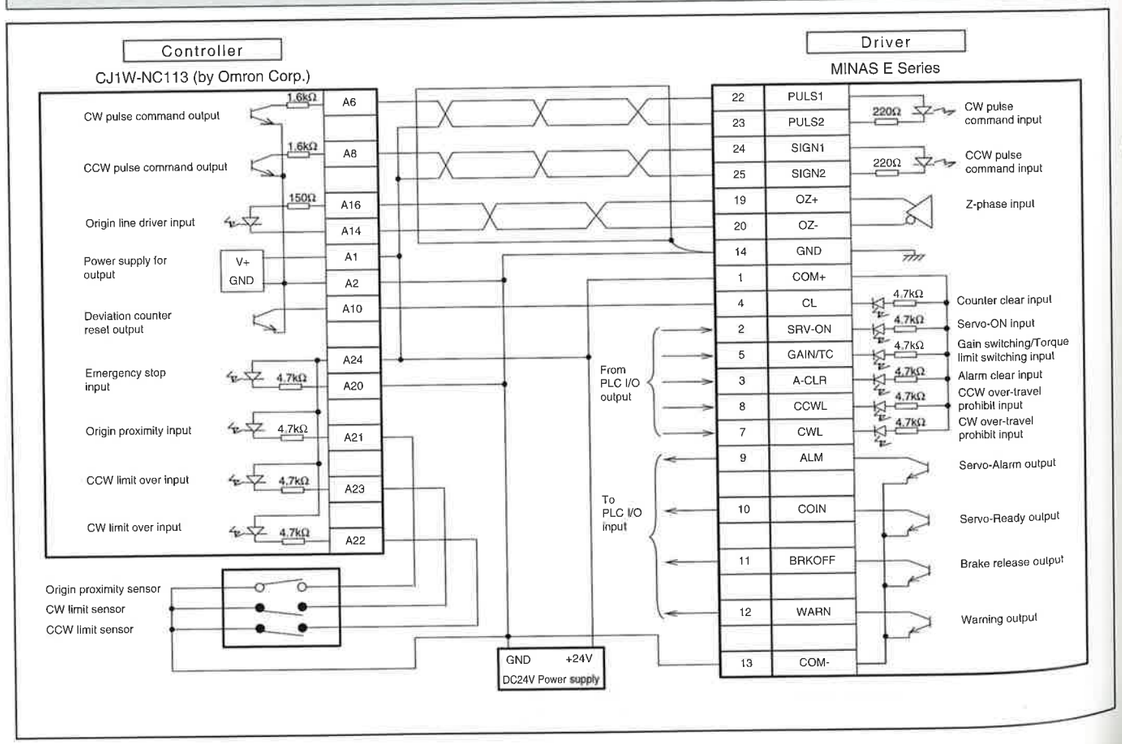

Connection between MINAS A4 and CJ1W-NC133(Omron Corp.)

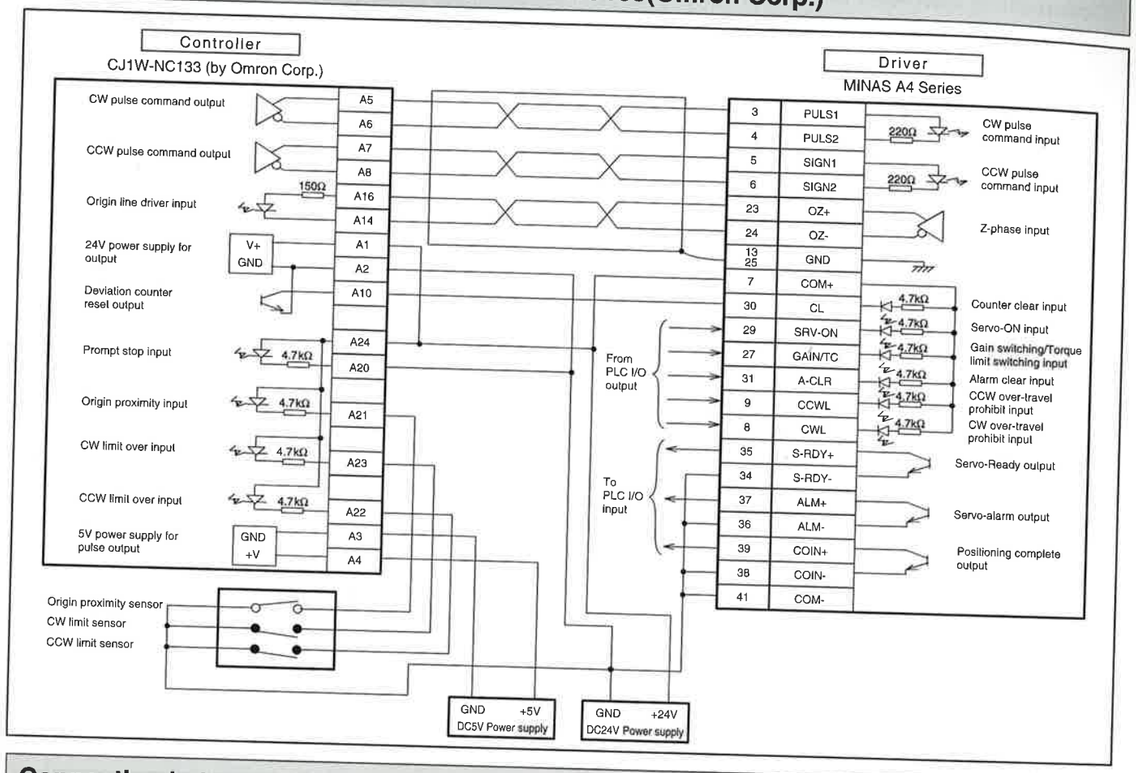

Connection between MINAS E and CJ1W-NC133(Omron Corp.)

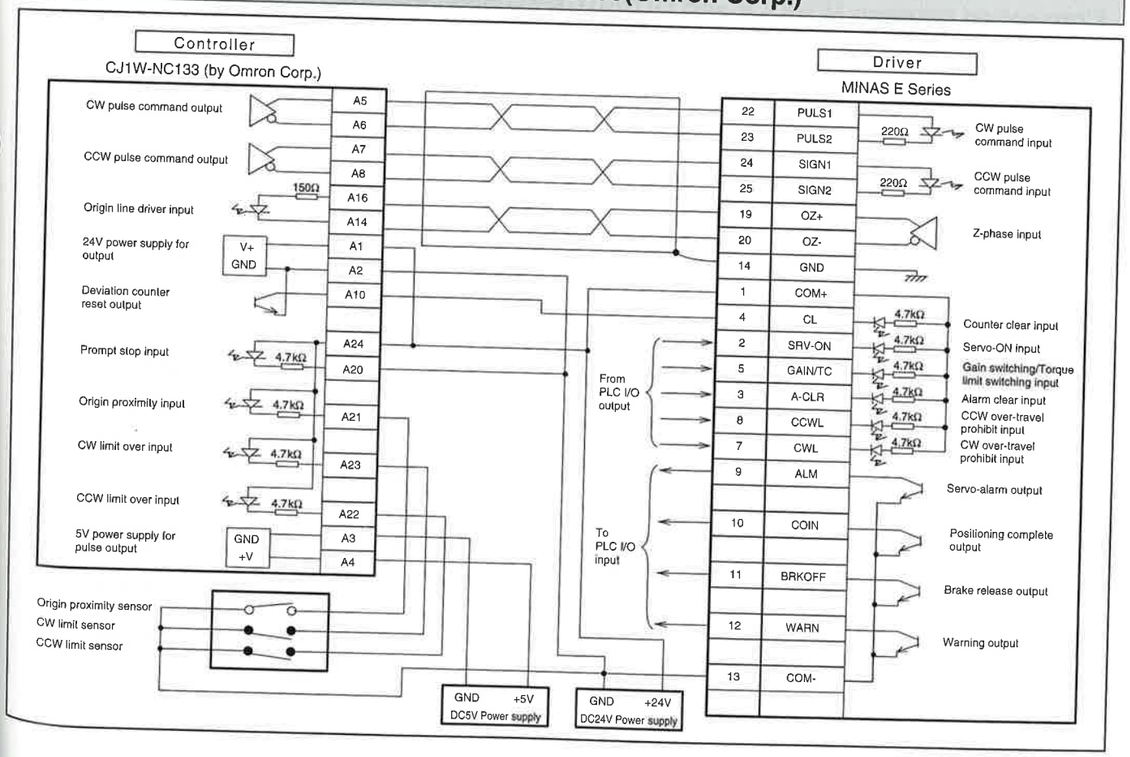

Connection between Driver and Controller

Connection between MINAS A4 and QD75D1(Mitsubishi Electric Corp.)

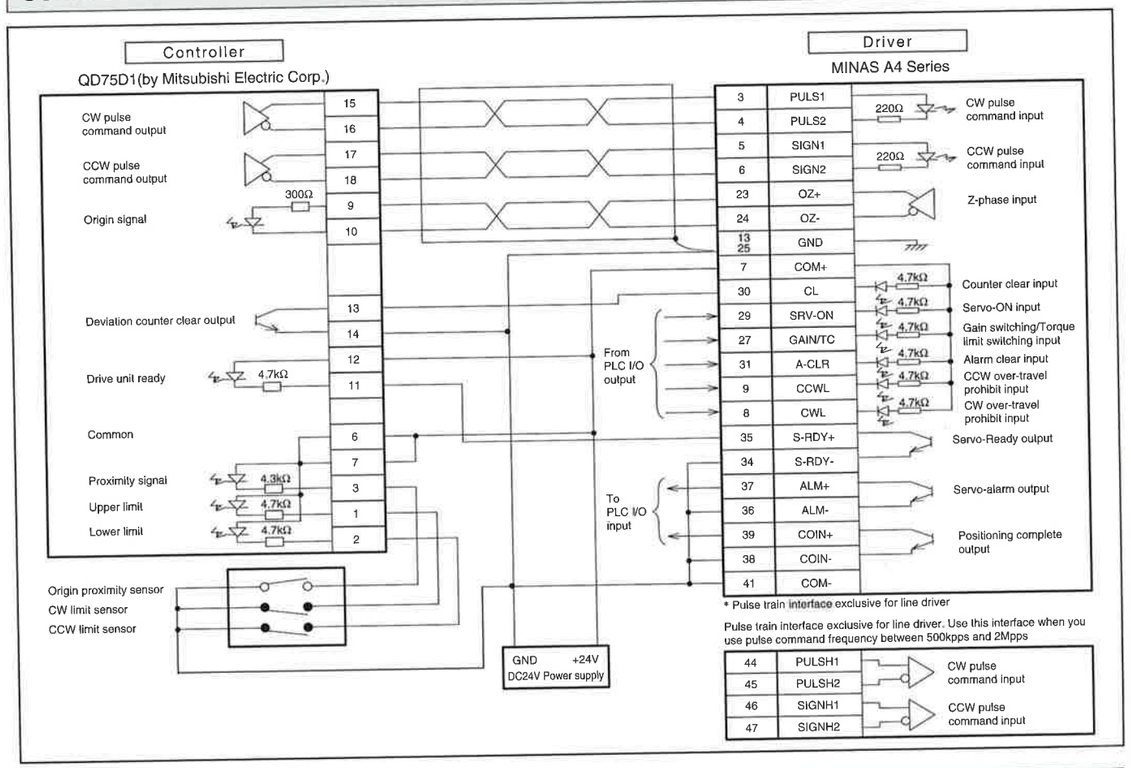

Connection between MINAS E and QD75D1(Mitsubishi Electric Corp.)

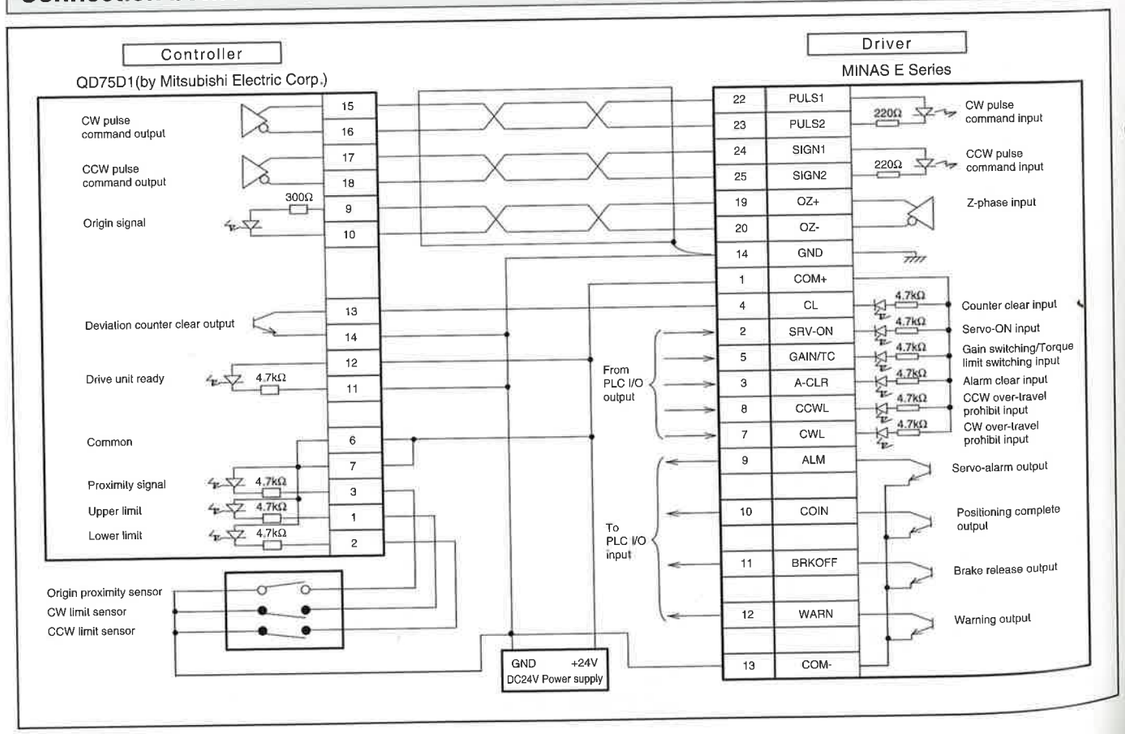

MEMO