| | |
|---|---|
| Document No.: | SX-DSV03224 |
| Revision No.: | 11.0 |
| Date of Issue: | February 1, 2024 |
| Classification: | ☐ New ■ Change |

# SPECIFICATIONS

Product Name: AC Servo Driver

Product Series Name: MINAS A6N Series for Linear motor/DD motor/VCM

Product Model Number: Basic Type/Multifunction Type

Motion Control Business Unit, Industrial Device Business Division
Panasonic Industry Co., Ltd.
7-1-1 Morofuku, Daito City, Osaka, 574-0044, Japan

If you have any questions, please contact the sales office or distributor of the product.

Panasonic

# REVISIONS

| Date | Rev. | Page | Description | Signed |
|---|---|---|---|---|
| Mar. 20, 2019 | 0.0 | — | NEWLY ISSUED | — |
| Jul. 4, 2019 | 1.0 | — | Changed company name | — |
| | | P6 | Corrected table in “3 Product Line-up” | |
| Jan. 8, 2020 | 2.0 | — | Added parameters | — |
| | | P1, P29 to P34<br>P44 to P50 | Added function “Voice coil motor (VCM) support” | |
| Apr. 8, 2020 | 3.0 | — | Added 400 V specification | — |
| | | — | Updated other contents according to the latest Japanese version | |
| | | — | Corrected typographical errors | |
| Sep. 25, 2020 | 4.0 | — | Added information regarding the attached table, corrected typographical errors | — |
| | | — | Changed the title of this specification to “Standard Specifications” | |
| Nov. 10, 2020 | 4.1 | P39 | Corrected typographical errors | — |
| Mar. 1, 2021 | 5.0 | — | Added Size D 400 V specification, corrected typographical errors | — |
| Nov. 1, 2021 | 6.0 | — | Changed company name | — |
| | | P78, 79 | Updated the description of global standards | |
| | | P92 | Updated a note about network security | |
| | | P93 | Added a note about reverse engineering | |
| Apr. 1, 2022 | 7.0 | — | Changed to our updated format and revised to standardize expressions | — |
| | | — | Changed company name | |
| Oct. 31, 2022 | 8.0 | — | Changed Compliance with the international standards<br>Corrected typographical errors | — |
| Jul. 12, 2023 | 9.0 | — | Added Size G/H 400 V specification | — |
| Nov. 1, 2023 | 10.0 | — | Updated default parameters | — |
| Feb. 1, 2024 | 11.0 | P3, 4 | Corrected typo regarding rated current of applicable motor (MDDLN45NL, MDDLT45NM) | — |
| | | P7 to P17 | Changed product number of X7 analog monitor connector | |
| | | P54 | Changed the connector and terminal product number of the X7 connector cable | |
| | | P87 to P89 | Added Compliance with EN61800-5-1:2007/A11:2021 | |
| | | P95 | Added text to “Load protection and overheating protection” column | |

| Date | Rev. | Page | Description | Signed |
|---|---|---|---|---|
| | | P108, 110, 113 | Corrected typo regarding maximum output current (MDDLN45NL, MDDLT45NM, MGDLTC3NM, MGDLTC4NM) | |

# Table of Contents

# 1 Scope of Application

This specification relates to the MINAS A6N Series for Linear motor/DD motor/VCM of AC Servo Drivers manufactured by Motion Control Business Unit, Industrial Device Business Division, Panasonic Industry Co., Ltd.

This product is intended for use as industrial equipment. It must not be used for any other purpose (e.g., for home use).

## ■ Related Materials

| | | |
|---|---|---|
| Technical Reference Document - Basic Function Specifications - | : | SX-DSV03181 |
| Technical Reference Document - Realtime Express (RTEX) Communication Specifications - | : | SX-DSV03211 |

* Please refer to the Panasonic website for the above documents.

## ■ Precautions

1 Reproduction of the contents of this document in whole or in part is strictly prohibited.

2 Due to product improvements, this document is subject to change without notice.

## ■ Applicable Motor Types

This series is compatible with DD (direct drive) motors, linear motors, and voice coil motors (VCM).

| Motor Type | DD (direct drive) motor | Linear motor<br>Voice coil motor (VCM) |
|---|---|---|
| 'Classification in This Document | Rotary type | Linear type |
| 'Related Terms | Inertia (unit: $kgm^2$) | Weight (unit: kg) |
| | Torque (unit: Nm) | Thrust (unit: N) |
| | r/min | mm/s |
| | Rotation | Operation |

The terminology used in this document is assuming the use of "rotary type".

If using "linear type", replace the terms as shown in the table above.

## 2 How to Read Product Numbers

Product numbers are to be read as follows:

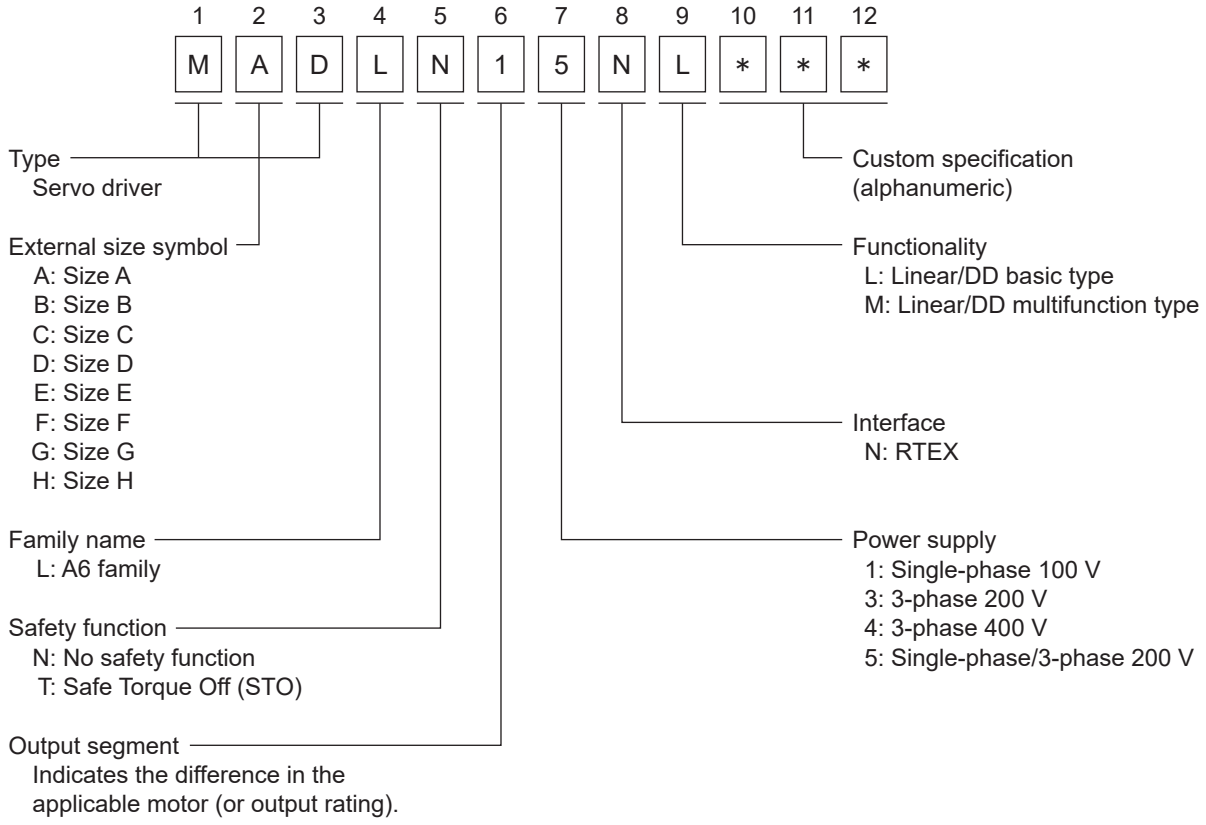

# 3 Product Line-up

## 3.1 Basic Type

| servo amplifier specification | | | | | Rated output of applicable motor | | | |
|---|---|---|---|---|---|---|---|---|
| | | | | | Rated current (Arms) | | | Maximum current (Arms) |
| | | | | | Carrier frequency | | | |
| Power | Product number | Size symbol | IGBT [A] | Regenerative resistor | 6 kHz | 8 kHz | 12 kHz | |
| Single-phase AC 100-120 V | MADLN01NL | A | 15 | External | — | — | 1.2 | 3.7 |
| | MADLN11NL | A | 15 | External | — | — | 1.6 | 5.5 |
| | MBDLN21NL | B | 15 | External | 2.5 | 2.1 | — | 7.4 |
| | MCDLN31NL | C | 30 | Built-in | 4.6 | 4.1 | — | 14.3 |
| Single-phase or 3-phase AC 200-240 V | MADLN05NL | A | 15 | External | — | — | 1.2 | 3.8 |
| | MADLN15NL | A | 15 | External | — | — | 1.6 | 4.8 |
| | MBDLN25NL | B | 15 | External | 2.6 | 2.1 | — | 7.3 |
| | MCDLN35NL | C | 30 | Built-in | 4.1 | — | — | 13.2 |
| | MDDLN45NL | D | 30 | Built-in | 5.9 | — | — | 15.5 |
| | MDDLN55NL | D | 50 | Built-in | 9.4 | — | — | 26.1 |
| 3-phase AC 200-240 V | MEDLN83NL | E | 75 | Built-in | 13.4 | — | — | 37.4 |
| | MEDLN93NL | E | 100 | Built-in | 17 | — | — | 48 |
| | MFDLNA3NL | F | 150 | Built-in | 18.7 | — | — | 54.4 |
| | MFDLNB3NL | F | 150 | Built-in | 33 | — | — | 72.1 |

* Select and use an applicable motor so that it is below the stated rated current and maximum current.
* The standard type is not compatible with size G and size H 400 V models.

## 3.2 Multifunction Type

| servo amplifier specification | | | | | Rated output of applicable motor | | | |
|---|---|---|---|---|---|---|---|---|
| | | | | | 'Rated current (Arms) | | | Maximum current (Arms) |
| Power | Product number | Size symbol | IGBT [A] | Regenerative resistor | Carrier frequency | | | |
| | | | | | 6 kHz | 8 kHz | 12 kHz | |
| Single-phase AC 100-120 V | MADLT01NM | A | 15 | External | — | — | 1.2 | 3.7 |
| | MADLT11NM | A | 15 | External | — | — | 1.6 | 5.5 |
| | MBDLT21NM | B | 15 | External | 2.5 | 2.1 | — | 7.4 |
| | MCDLT31NM | C | 30 | Built-in | 4.6 | 4.1 | — | 14.3 |
| Single-phase or 3-phase AC 200-240 V | MADLT05NM | A | 15 | External | — | — | 1.2 | 3.8 |
| | MADLT15NM | A | 15 | External | — | — | 1.6 | 4.8 |
| | MBDLT25NM | B | 15 | External | 2.6 | 2.1 | — | 7.3 |
| | MCDLT35NM | C | 30 | Built-in | 4.1 | — | — | 13.2 |
| | MDDLT45NM | D | 30 | Built-in | 5.9 | — | — | 15.5 |
| | MDDLT55NM | D | 50 | Built-in | 9.4 | — | — | 26.1 |
| 3-phase AC 200-240 V | MEDLT83NM | E | 75 | Built-in | 13.4 | — | — | 37.4 |
| | MEDLT93NM | E | 100 | Built-in | 17.0 | — | — | 48.0 |
| | MFDLTA3NM | F | 150 | Built-in | 18.7 | — | — | 54.4 |
| | MFDLTB3NM | F | 150 | Built-in | 33.0 | — | — | 72.1 |
| 3-phase 200 V | MGDLTC3NM | G | 200 | External | 40.0 | — | — | 116.6 |
| 3-phase 200 V | MHDLTE3NM | H | 300 | External | — | 66.1 | — | 167.2 |
| | MHDLTF3NM | H | 450 | External | 80.2 | — | — | 207.9 |
| 3-phase 400 V | MDDLT44NM | D | 25 | Built-in | 1.5 | 1.2 | 0.8 | 4.5 |
| | MDDLT54NM | D | 25 | Built-in | 2.9 | — | — | 8.7 |
| | MDDLT64NM | D | 25 | Built-in | 4.7 | — | — | 14.1 |
| | MEDLT84NM | E | 35 | Built-in | 6.7 | — | — | 19.7 |
| | MFDLTA4NM | F | 50 | Built-in | 9.4 | — | — | 28.2 |
| | MFDLTB4NM | F | 75 | Built-in | 16.5 | — | — | 42.4 |
| | MGDLTC4NM | G | 100 | External | 20.3 | — | — | 58.7 |
| | MHDLTE4NM | H | 150 | External | — | 32.3 | — | 83.7 |
| | MHDLTF4NM | H | 200 | External | 40.1 | — | — | 103.9 |

* Select and use an applicable motor so that it is below the stated rated current and maximum current.

## 4 Specifications

| Item | | | | Description |
|---|---|---|---|---|
| Input power supply | 100 V type | Main circuit power supply | | Single-phase 100–120 V, -15% to +10%, 50/60 Hz |
| | | Control circuit power supply | | Single-phase 100–120 V, -15% to +10%, 50/60 Hz |
| | 200 V type | Main circuit power supply | Sizes A–D | Single-phase/3-phase 200–240 V, -15% to +10%, 50/60 Hz |
| | | | Sizes E–H | 3-phase 200–240 V, -15% to +10%, 50/60 Hz |
| | | Control circuit power supply | Sizes A–D | Single-phase 200–240 V, -15% to +10%, 50/60 Hz |
| | | | Sizes E–H | Single-phase 200–240 V, -15% to +10%, 50/60 Hz |
| | 400 V type | Main circuit power supply | | 3-phase 380Y/220-480Y/277 V, -15% to +10%, 50/60 Hz<br>TN (ground the neutral point to earth) |
| | | Control circuit power supply | | DC 24 V, ±15 % |
| Ambient operating conditions | | Temperature | | Operating temperature: 0–55°C (no freezing)<br>Storage temperature: -20°C to 65°C (Max. temperature guarantee: 80°C, 72 hours, no condensation (*1) ) |
| | | Humidity | | Operating/storage humidity: 20–85% RH or less (no condensation (*1) ) |
| | | Elevation | | 1,000 m or less above sea level |
| | | Vibration | | 5.88 m/s$^2$ or less, 10–60 Hz |
| | | Pollution degree | | Pollution degree 2 |
| Insulation voltage resistance | | | | Withstanding AC 1,500 V between primary and ground for 1 minute |
| Control method | | | | IGBT PWM method, sinusoidal drive |
| CS signal feedback | | | | CS signal input (CS1, CS2, CS3); supports TTL-level input |
| Scale feedback | | | | A/B phase, homing signal differential input type<br>Panasonic supported serial communication type (*2) |
| Control signal | | Input | | 8 general inputs<br>Select general input function based on parameters |
| | | Output | | 3 general outputs<br>Select general output function based on parameters |
| Analog signal | | Output | | 2 outputs (analog monitor 1, analog monitor 2) |
| Pulse signal | | Output | | 2 outputs<br>Line driver output for encoder pulses (A/B phase signals) |
| Communication function | | Realtime Express (RTEX) | | Real-time operation command transmission, parameter setting, status monitoring, etc. |
| | | USB | | Connect to a computer for parameter setting or status monitoring, etc. |
| Safety terminal (*3) | | | | Connector for functional safetyConnector for functional safety |
| Front panel | | | | (1) Rotary switch<br>(2) 2-digit, 7-segment LED and 2 lights for status display<br>(3) Analog monitor connector |
| Regeneration | | | | Sizes A, B, G, H: No built-in regenerative resistor (external only)<br>Sizes C–F: Built-in regenerative resistor (external also possible) |
| Dynamic brake | | | | Sizes A–G: Built-in / Size H: External only |

| Item | Description |
|---|---|
| Control mode | Position control: Profile position control (PP), cyclic position control (CP)<br>Velocity control: Cyclic velocity control (CV)<br>Torque control: Cyclic torque control (CT)<br>The above PP/CP/CV/CT are switched using RTEX communication commands |

*1 Please note that condensation tends occur when the temperature drops.

*2 Please refer to the collaboration catalog for the corresponding scale manufacturer and part number.

*3 Cannot be used with the basic type.

For details of each specification, refer to Technical Reference - Functional Specification -.

### Feedback scale input signal specification

The A/B signal at less than or equal to the maximum output frequency 4 Mbps are available.

Please use under the following conditions.

Please note that if the duty ratio of the scale input signal waveform is not 50%, it may not be able to be read normally.

| At negative direction | At positive direction |
|---|---|
| B phase advances 90 deg. from the A-phase<br>t1 t2 t3 t4> 0.25 μs<br>T> 1.0 μs<br><br>Internal signal of servo driver<br> 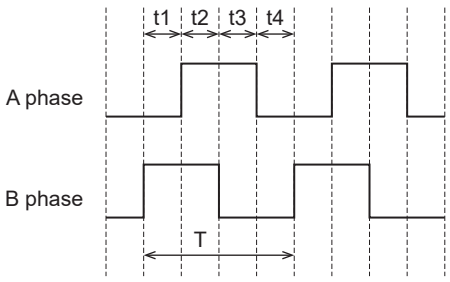 <br> | A phase advances 90 deg. from the B-phase<br>t1 t2 t3 t4> 0.25 μs<br>T> 1.0 μs<br><br>Internal signal of servo driver<br> 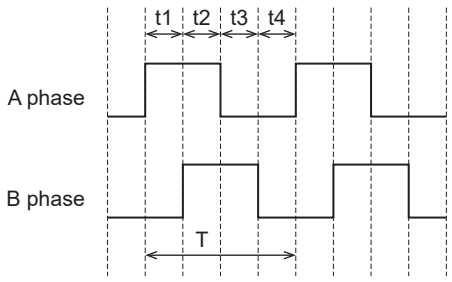 <br> |

# 5 Appearance and Part Names

For each size, the figure is of a multifunction type. The basic type does not have X3 (connector for safety functions/ safety bypass plug).

## 5.1 Size A, B 100 V/200 V

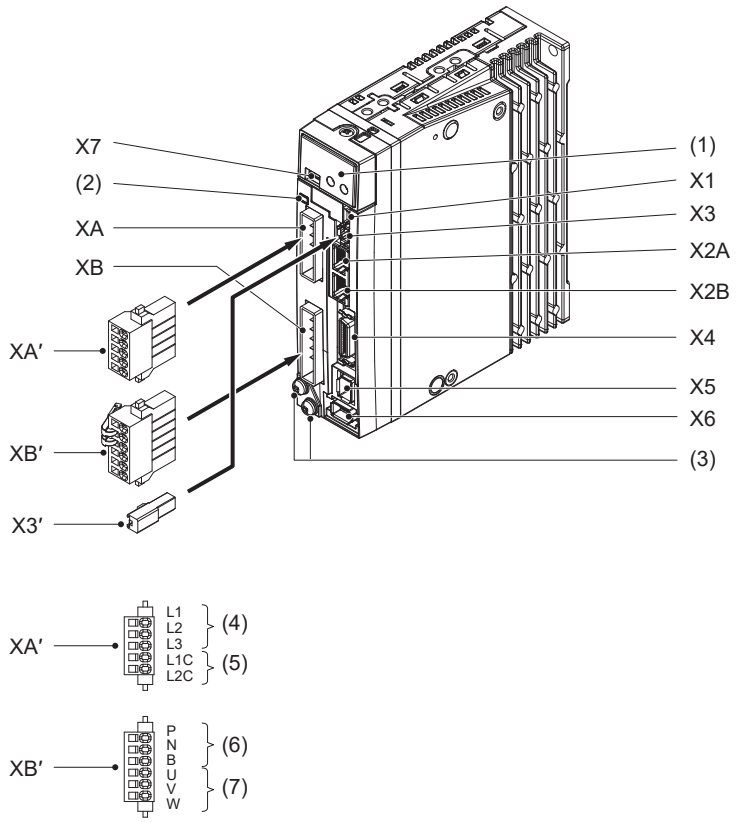


| | | | |
|---|---|---|---|
| X1 | USB connector<br>UB-M5BR-S14-4S (LF) (SN) (JST) equivalent | | |
| X2A | RTEX connector (RX)<br>MOD-WRJ88LY1G-TP+ (HTK) equivalent | X2B | RTEX connector (TX)<br>MOD-WRJ88LY1G-TP+ (HTK) equivalent |
| X3 | Safety function connector<br>CIF-HS08SK-071-TB (LF) equivalent | X3′ | Safety bypass plug<br>CIF-PB08AK-GF1R (JST) |
| X4 | Parallel I/O connector<br>DF02R026NA2 (JAE) equivalent | X5 | Feedback scale connector<br>MUF-RS10SK-GKX-TB (LF) (JST) equivalent |
| X6 | CS signal connector<br>3E106-2230KV (3M) equivalent | X7 | Analog monitor connector<br>533984005 (Molex) equivalent |
| XA | Power supply input connector<br>S05B-F32SK-GGXR (JST) equivalent | XA′ | Power supply input connector<br>05JFAT-SAXGGKK-A (JST) equivalent |
| XB | Motor output connector<br>S06B-F32SK-GGXR (JST) equivalent | XB′ | Motor output connector<br>06JFAT-SAXGGKK-A (JST) equivalent |
| (1) | Front panel | (2) | Charge lamp |
| (3) | Earth connection screw | (4) | Main power supply input |
| (5) | Control power supply input | (6) | Regenerative resistor connection |
| (7) | Motor output | | |

* Remove the safety bypass plug when wiring to X3.

## 5.2 Size C, D 100 V/200 V

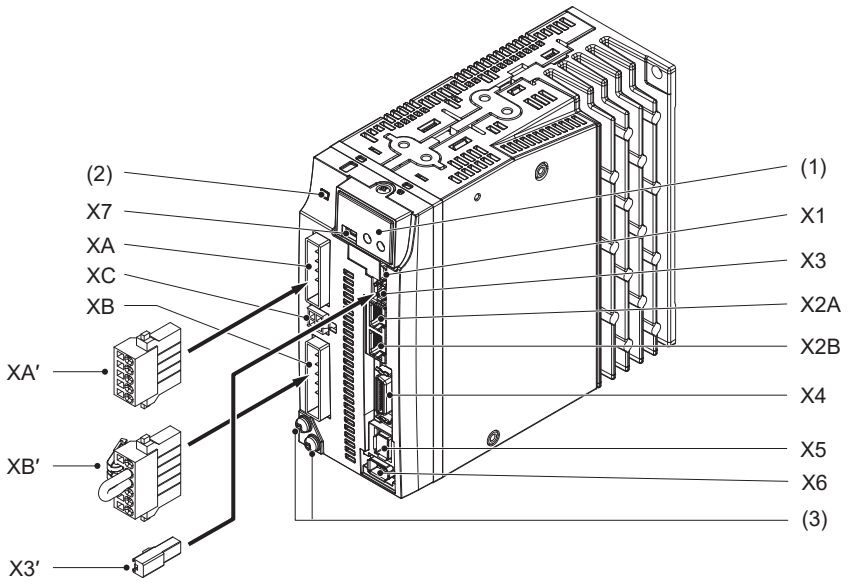


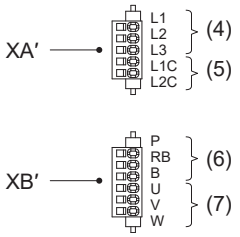


| | | | |
|---|---|---|---|
| X1 | USB connector<br>UB-M5BR-S14-4S (LF) (SN) (JST) equivalent | | |
| X2A | RTEX connector (RX)<br>MOD-WRJ88LY1G-TP+ (HTK) equivalent | X2B | RTEX connector (TX)<br>MOD-WRJ88LY1G-TP+ (HTK) equivalent |
| X3 | Safety function connector<br>CIF-HS08SK-071-TB (LF) equivalent | X3′ | Safety bypass plug<br>CIF-PB08AK-GF1R (JST) |
| X4 | Parallel I/O connector<br>DF02R026NA2 (JAE) equivalent | X5 | Feedback scale connector<br>MUF-RS10SK-GKX-TB (LF) (JST) equivalent |
| X6 | CS signal connector<br>3E106-2230KV (3M) equivalent | X7 | Analog monitor connector<br>533984005 (Molex) equivalent |
| XA | Power supply input connector<br>S05B-F32SK-GGXR (JST) equivalent | XA′ | Power supply input connector<br>05JFAT-SAXGGKK-A (JST) equivalent |
| XB | Motor output connector<br>S06B-F32SK-GGXR (JST) equivalent | XB′ | Motor output connector<br>06JFAT-SAXGGKK-A (JST) equivalent |
| XC | Manufacturer use<br>(Do not connect anything to this connector) | (1) | Front panel |
| (2) | Charge lamp | (3) | Earth connection screw |
| (4) | Main power supply input | (5) | Control power supply input |
| (6) | Regenerative resistor connection | (7) | Motor output |

* Remove the safety bypass plug when wiring to X3.

## 5.3 Size E 200 V

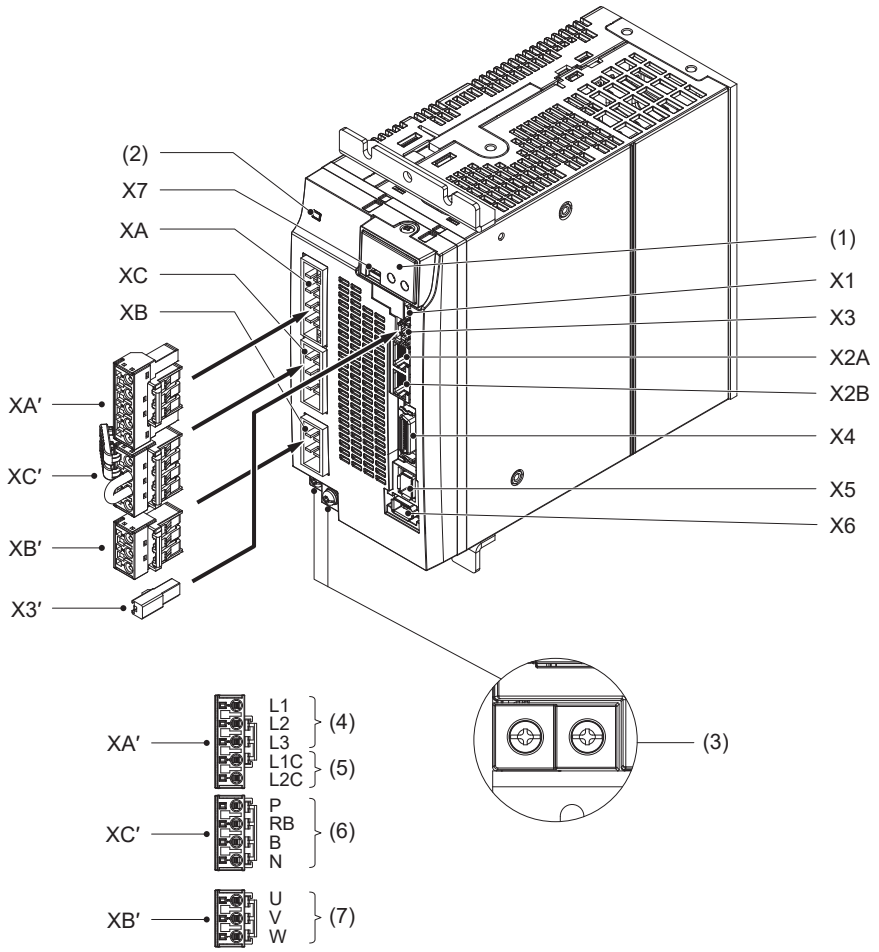


| | | | |
|---|---|---|---|
| X1 | USB connector<br>UB-M5BR-S14-4S (LF) (SN) (JST) equivalent | | |
| X2A | RTEX connector (RX)<br>MOD-WRJ88LY1G-TP+ (HTK) equivalent | X2B | RTEX connector (TX)<br>MOD-WRJ88LY1G-TP+ (HTK) equivalent |
| X3 | Safety function connector<br>CIF-HS08SK-071-TB (LF) equivalent | X3′ | Safety bypass plug<br>CIF-PB08AK-GF1R (JST) |
| X4 | Parallel I/O connector<br>DF02R026NA2 (JAE) equivalent | X5 | Feedback scale connector<br>MUF-RS10SK-GKX-TB (LF) (JST) equivalent |
| X6 | CS signal connector<br>3E106-2230KV (3M) equivalent | X7 | Analog monitor connector<br>533984005 (Molex) equivalent |
| XA | Power supply input connector<br>S05B-JTSLSK-GSANXR (JST) equivalent | XA′ | Power supply input connector<br>05JFAT-SAXGSA-L (JST) equivalent |
| XB | Motor output connector<br>S03B-JTSLSK-GSANXR (JST) equivalent | XB′ | Motor output connector<br>03JFAT-SAXGSA-L (JST) equivalent |
| XC | Regenerative resistor connector<br>S04B-JTSLSK-GSANXR (JST) equivalent | XC′ | Regenerative resistor connector<br>04JFAT-SAXGSA-L (JST) equivalent |
| (1) | Front panel | (2) | Charge lamp |
| (3) | Earth connection screw | (4) | Main power supply input |
| (5) | Control power supply input | (6) | Regenerative resistor connection |
| (7) | Motor output | | |

* Remove the safety bypass plug when wiring to X3.

## 5.4 Size F 200 V

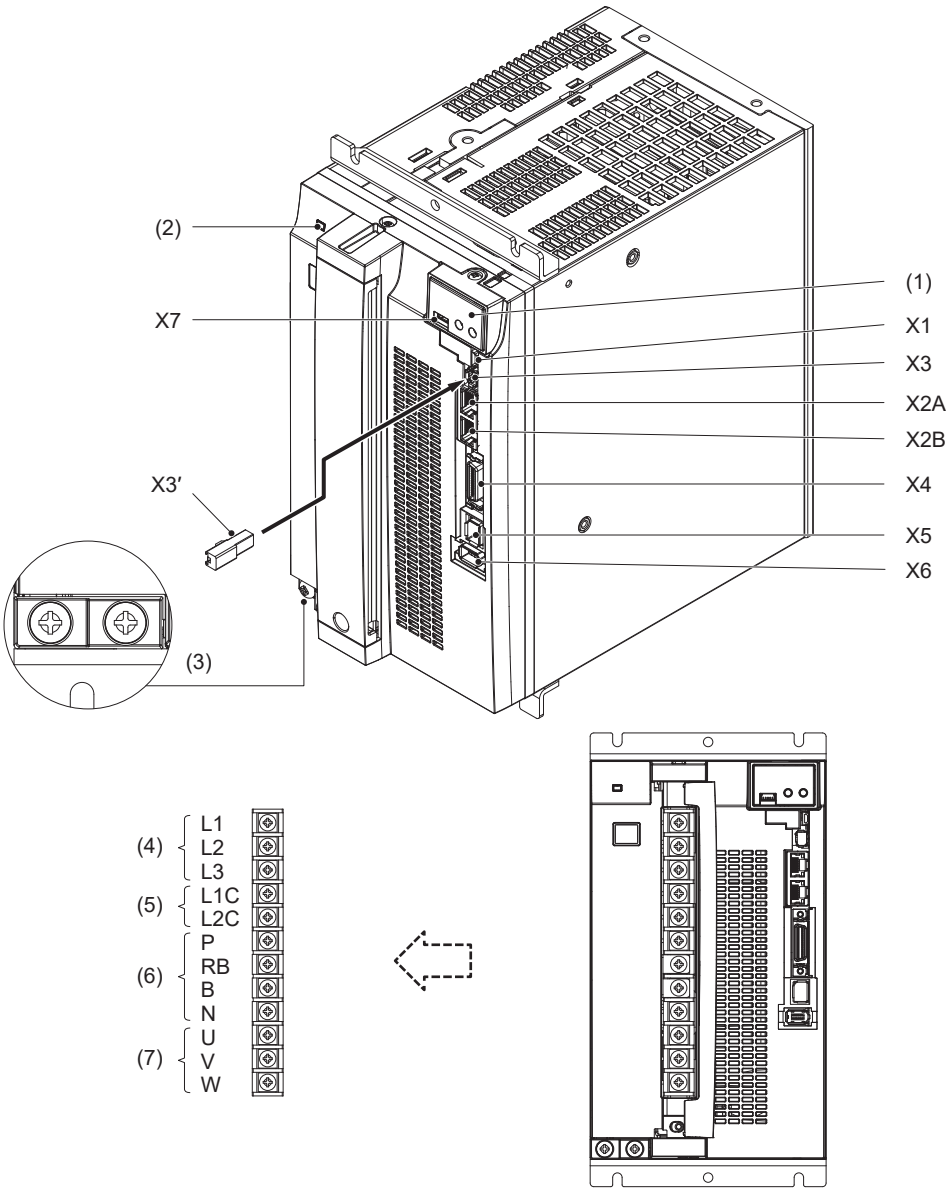


| | | | |
|---|---|---|---|
| X1 | USB connector<br>UB-M5BR-S14-4S (LF) (SN) (JST) equivalent | | |
| X2A | RTEX connector (RX)<br>MOD-WRJ88LY1G-TP+ (HTK) equivalent | X2B | RTEX connector (TX)<br>MOD-WRJ88LY1G-TP+ (HTK) equivalent |
| X3 | Safety function connector<br>CIF-HS08SK-071-TB (LF) equivalent | X3′ | Safety bypass plug<br>CIF-PB08AK-GF1R (JST) |
| X4 | Parallel I/O connector<br>DF02R026NA2 (JAE) equivalent | X5 | Feedback scale connector<br>MUF-RS10SK-GKX-TB (LF) (JST) equivalent |
| X6 | CS signal connector<br>3E106-2230KV (3M) equivalent | X7 | Analog monitor connector<br>533984005 (Molex) equivalent |
| (1) | Front panel | (2) | Charge lamp |
| (3) | Earth connection screw | (4) | Main power supply input |
| (5) | Control power supply input | (6) | Regenerative resistor connection (Normal RB-B short circuit) |
| (7) | Motor output | | |

* Remove the safety bypass plug when wiring to X3.

## 5.5 Size G 200 V

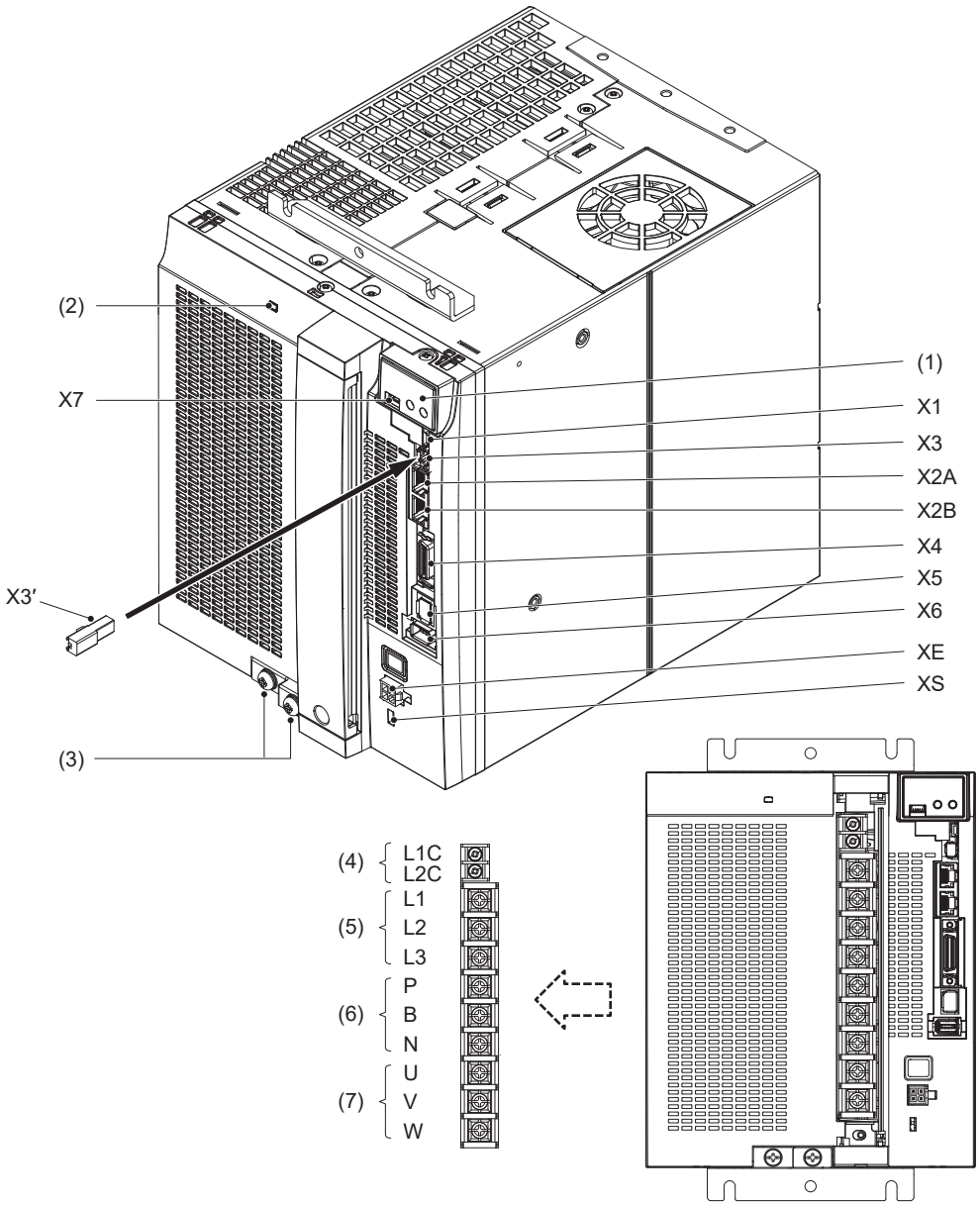


| | | | |
|---|---|---|---|
| X1 | USB connector<br>UB-M5BR-S14-4S (LF) (SN) (JST) equivalent | XE | External DB control connector<br>5569-04A2-210 (MOLEX) equivalent |
| X2A | RTEX connector (RX)<br>MOD-WRJ88LY1G-TP+ (HTK) equivalent | X2B | RTEX connector (TX)<br>MOD-WRJ88LY-TP+ (HTK) equivalent |
| X3 | Safety function connector<br>CIF-HS08SK-071-TB (LF) equivalent | X3′ | Safety bypass plug<br>CIF-PB08AK-GF1R (JST) |
| X4 | Parallel I/O connector<br>DF02R050NA2 (JAE) equivalent | X5 | Feedback scale connector<br>MUF-RS10SK-GKX-TB (LF) (JST) equivalent |
| X6 | CS signal connector<br>3E106-2230KV (3M) equivalent | X7 | Analog monitor connector<br>533984005 (Molex) equivalent |
| XS | Internal DB switch | (1) | Front panel |
| (2) | Charge lamp | (3) | Earth connection screw |
| (4) | Control power supply input | (5) | Main power supply input |
| (6) | Regenerative resistor connection | (7) | Motor output |

* Remove the safety bypass plug when wiring to X3.

## 5.6 Size H 200 V

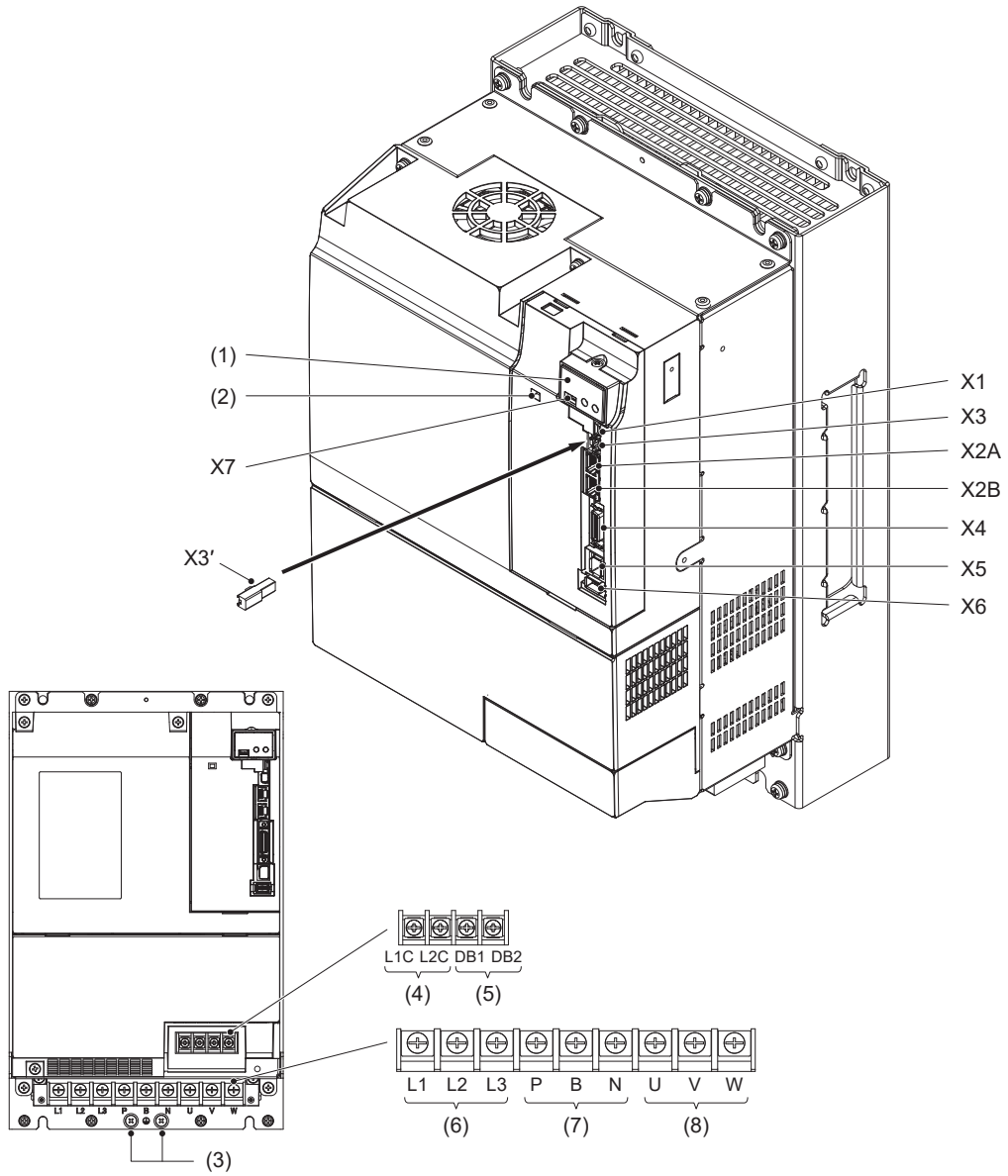


| | | | |
|---|---|---|---|
| X1 | USB connector<br>UB-M5BR-S14-4S (LF) (SN) (JST) equivalent | | |
| X2A | RTEX connector (RX)<br>MOD-WRJ88LY1G-TP+ (HTK) equivalent | X2B | RTEX connector (TX)<br>MOD-WRJ88LY1G-TP+ (HTK) equivalent |
| X3 | Safety function connector<br>CIF-HS08SK-071-TB (LF) equivalent | X3′ | Safety bypass plug<br>CIF-PB08AK-GF1R (JST) |
| X4 | Parallel I/O connector<br>DF02R050NA2 (JAE) equivalent | X5 | Feedback scale connector<br>MUF-RS10SK-GKX-TB (LF) (JST) equivalent |
| X6 | CS signal connector<br>3E106-2230KV (3M) equivalent | X7 | Analog monitor connector<br>533984005 (Molex) equivalent |
| (1) | Front panel | (2) | Charge lamp |
| (3) | Earth connection screw | (4) | Control power supply input |
| (5) | External DB control connection | (6) | Main power supply input |
| (7) | Regenerative resistor connection | (8) | Motor output |

* Remove the safety bypass plug when wiring to X3.

## 5.7 Size D 400 V

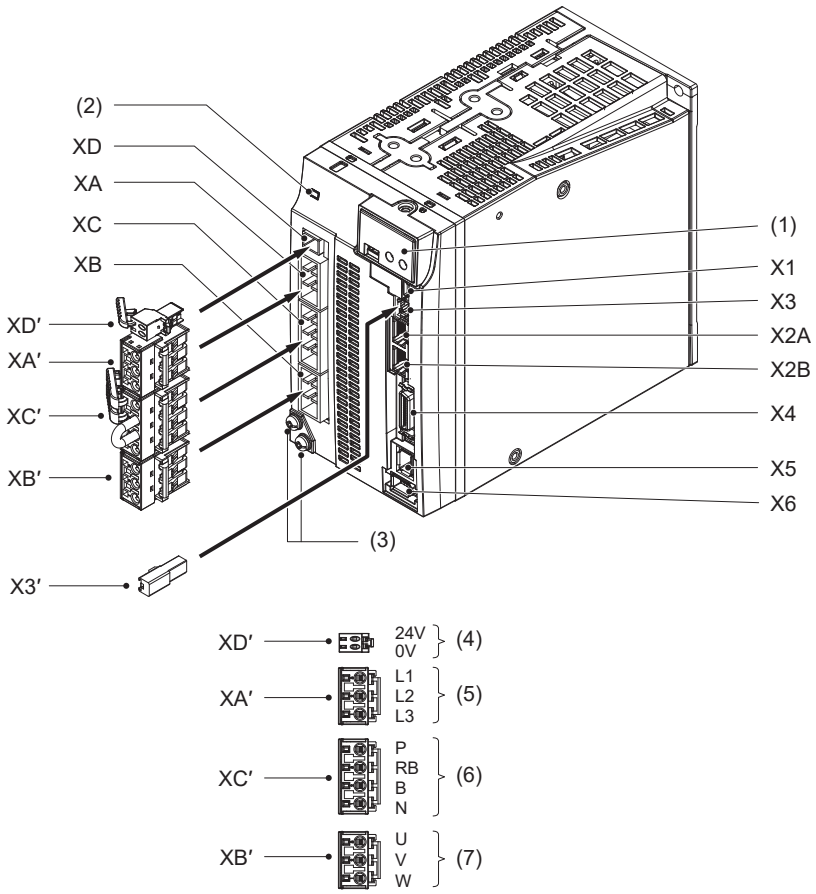


| | | | |
|---|---|---|---|
| X1 | USB connector<br>UB-M5BR-S14-4S (LF) (SN) (JST) equivalent | | |
| X2A | RTEX connector (RX)<br>MOD-WRJ88LY1G-TP+ (HTK) equivalent | X2B | RTEX connector (TX)<br>MOD-WRJ88LY1G-TP+ (HTK) equivalent |
| X3 | Safety function connector<br>CIF-HS08SK-071-TB (LF) equivalent | X3′ | Safety bypass plug<br>CIF-PB08AK-GF1R (JST) |
| X4 | Parallel I/O connector<br>DF02R026NA2 (JAE) equivalent | X5 | Feedback scale connector<br>MUF-RS10SK-GKX-TB (LF) (JST) equivalent |
| X6 | CS signal connector<br>3E106-2230KV (3M) equivalent | X7 | Analog monitor connector<br>533984005 (Molex) equivalent |
| XA | Power supply input connector<br>S03B-JTSLSS-GSANYR (JST) equivalent | XA′ | Power supply input connector<br>03JFAT-SAYGSA-L (JST) equivalent |
| XB | Motor output connector<br>S03B-JTSLSK-GSANXR (JST) equivalent | XB′ | Motor output connector<br>03JFAT-SAXGSA-L (JST) equivalent |
| XC | Regenerative resistor connector<br>S04B-JTSLSK-GSANXR (JST) equivalent | XC′ | Regenerative resistor connector<br>04JFAT-SAXGSA-L (JST) equivalent |
| XD | Control power supply Input connector<br>S02B-J25SK-GGR (JST) equivalent | XD′ | Control power supply Input connector<br>02MJFAT-SAGF (JST) equivalent |
| (1) | Front panel | (2) | Charge lamp |
| (3) | Earth connection screw | (4) | Control power supply input |
| (5) | Main power supply input | (6) | Regenerative resistor connection |
| (7) | Motor output | | |

* Remove the safety bypass plug when wiring to X3.

## 5.8 Size E 400 V

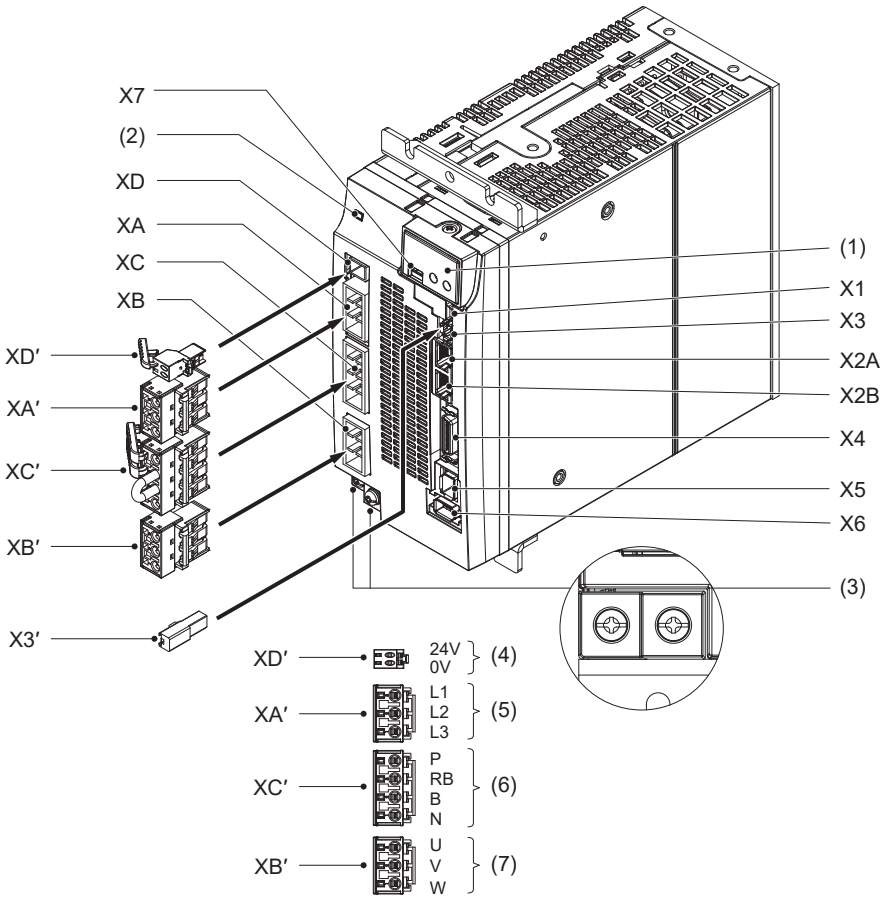


| | | | |
|---|---|---|---|
| X1 | USB connector<br>UB-M5BR-S14-4S (LF) (SN) (JST) equivalent | | |
| X2A | RTEX connector (RX)<br>MOD-WRJ88LY1G-TP+ (HTK) equivalent | X2B | RTEX connector (TX)<br>MOD-WRJ88LY1G-TP+ (HTK) equivalent |
| X3 | Safety function connector<br>CIF-HS08SK-071-TB (LF) equivalent | X3′ | Safety bypass plug<br>CIF-PB08AK-GF1R (JST) |
| X4 | Parallel I/O connector<br>DF02R026NA2 (JAE) equivalent | X5 | Feedback scale connector<br>MUF-RS10SK-GKX-TB (LF) (JST) equivalent |
| X6 | CS signal connector<br>3E106-2230KV (3M) equivalent | X7 | Analog monitor connector<br>533984005 (Molex) equivalent |
| XA | Power supply input connector<br>S03B-JTSLSS-GSANYR (JST) equivalent | XA′ | Power supply input connector<br>03JFAT-SAYGSA-L (JST) equivalent |
| XB | Motor output connector<br>S03B-JTSLSK-GSANXR (JST) equivalent | XB′ | Motor output connector<br>03JFAT-SAXGSA-L (JST) equivalent |
| XC | Regenerative resistor connector<br>S04B-JTSLSK-GSANXR (JST) equivalent | XC′ | Regenerative resistor connector<br>04JFAT-SAXGSA-L (JST) equivalent |
| XD | Control power supply Input connector<br>S02B-J25SK-GGR (JST) equivalent | XD′ | Control power supply Input connector<br>02MJFAT-SAGF (JST) equivalent |
| (1) | Front panel | (2) | Charge lamp |
| (3) | Earth connection screw | (4) | Control power supply input |
| (5) | Main power supply input | (6) | Regenerative resistor connection |
| (7) | Motor output | | |

* Remove the safety bypass plug when wiring to X3.

## 5.9 Size F 400 V

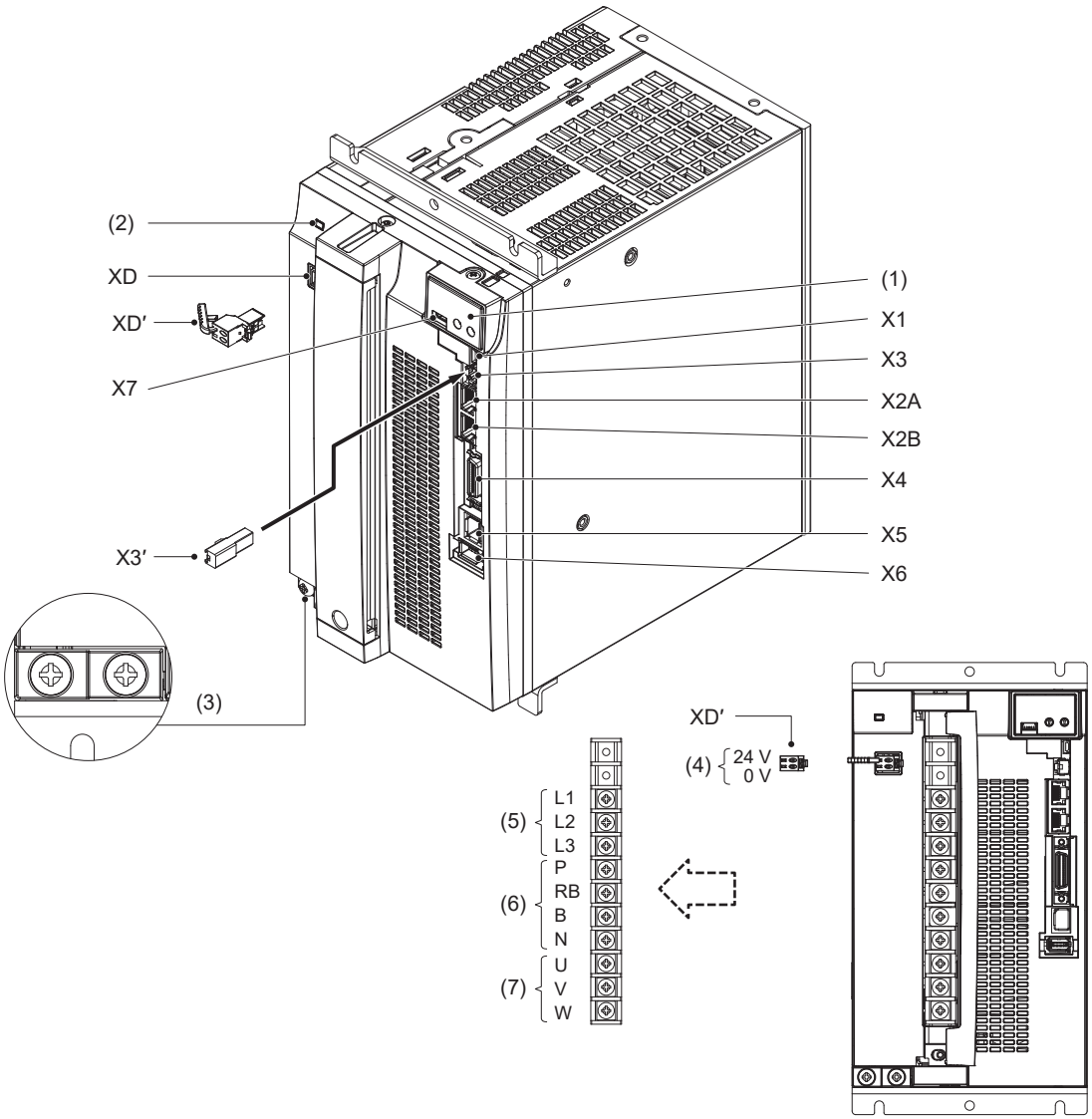


| | | | |
|---|---|---|---|
| X1 | USB connector<br>UB-M5BR-S14-4S (LF) (SN) (JST) equivalent | | |
| X2A | RTEX connector (RX)<br>MOD-WRJ88LY1G-TP+ (HTK) equivalent | X2B | RTEX connector (TX)<br>MOD-WRJ88LY1G-TP+ (HTK) equivalent |
| X3 | Safety function connector<br>CIF-HS08SK-071-TB (LF) equivalent | X3′ | Safety bypass plug<br>CIF-PB08AK-GF1R (JST) |
| X4 | Parallel I/O connector<br>DF02R026NA2 (JAE) equivalent | X5 | Feedback scale connector<br>MUF-RS10SK-GKX-TB (LF) (JST) equivalent |
| X6 | CS signal connector<br>3E106-2230KV (3M) equivalent | X7 | Analog monitor connector<br>533984005 (Molex) equivalent |
| XD | Control power supply Input connector<br>S02B-J25SK-GGR (JST) equivalent | XD′ | Control power supply Input connector<br>02MJFAT-SAGF (JST) equivalent |
| (1) | Front panel | (2) | Charge lamp |
| (3) | Earth connection screw | (4) | Control power supply input |
| (5) | Main power supply input | (6) | Regenerative resistor connection (Normal RB-B short circuit) |
| (7) | Motor output | | |

* Remove the safety bypass plug when wiring to X3.

## 5.10 Size G 400 V

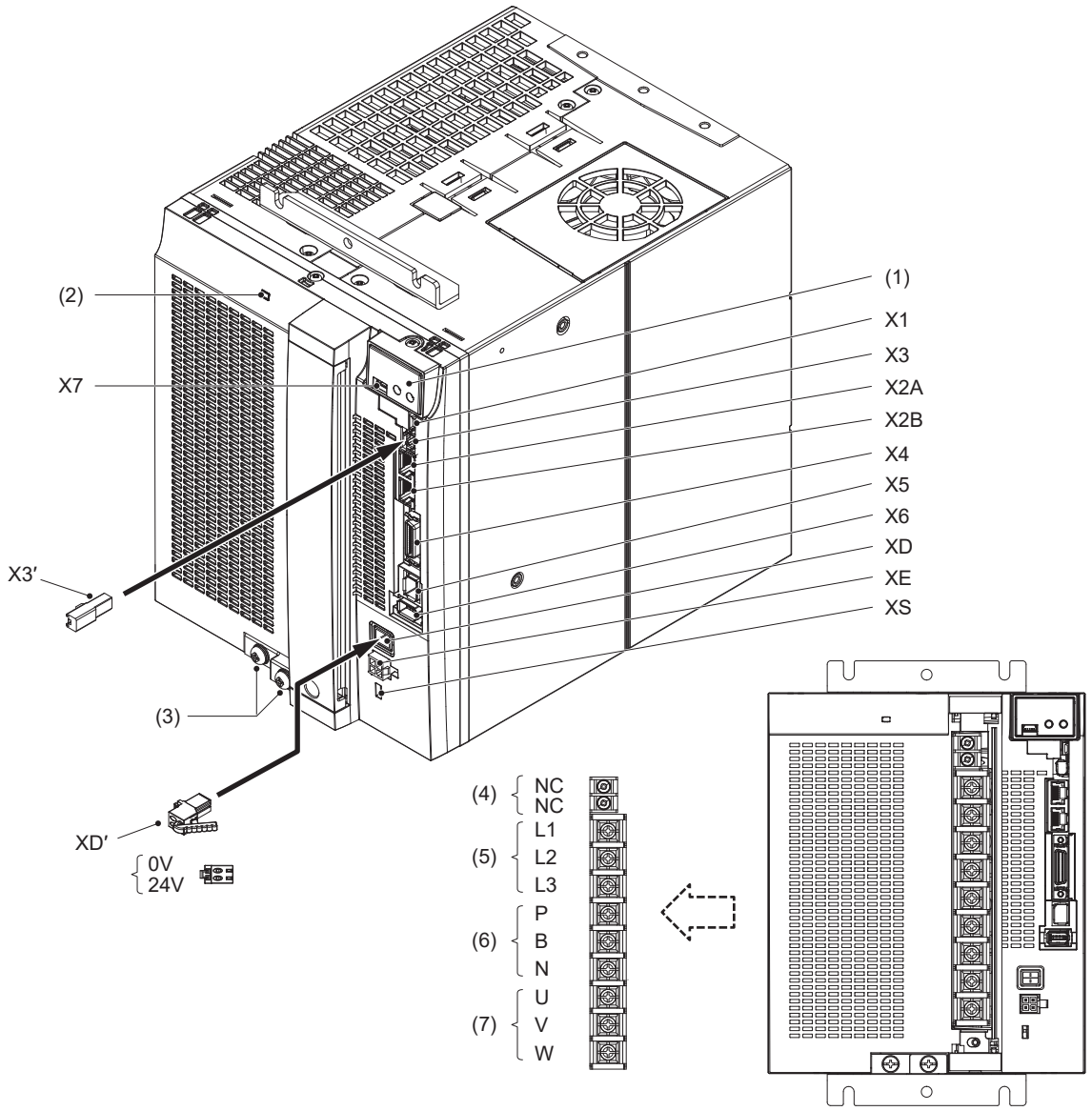


| | | | |
|---|---|---|---|
| X1 | USB connector<br>UB-M5BR-S14-4S (LF) (SN) (JST) equivalent | XE | External DB control connector<br>5569-04A2-210 (MOLEX) equivalent |
| X2A | RTEX connector (RX)<br>MOD-WRJ88LY1G-TP+ (HTK) equivalent | X2B | RTEX connector (TX)<br>MOD-WRJ88LY-TP+ (HTK) equivalent |
| X3 | Safety function connector<br>CIF-HS08SK-071-TB (LF) equivalent | X3′ | Safety bypass plug<br>CIF-PB08AK-GF1R (JST) |
| X4 | Parallel I/O connector<br>DF02R050NA2 (JAE) equivalent | X5 | Feedback scale connector<br>MUF-RS10SK-GKX-TB (LF) (JST) equivalent |
| X6 | CS signal connector<br>3E106-2230KV (3M) equivalent | X7 | Analog monitor connector<br>533984005 (Molex) equivalent |
| XD | Control power supply Input connector<br>SR02B-J25SK-GGR (JST) equivalent | XD′ | Control power supply Input connector<br>02MJFAT-SAGF (JST) equivalent |
| XS | Internal DB switch | (1) | Front panel |
| (2) | Charge lamp | (3) | Earth connection screw |
| (4) | Control power supply input | (5) | Main power supply input |
| (6) | Regenerative resistor connection | (7) | Motor output |

* Remove the safety bypass plug when wiring to X3.

## 5.11 Size H 400 V

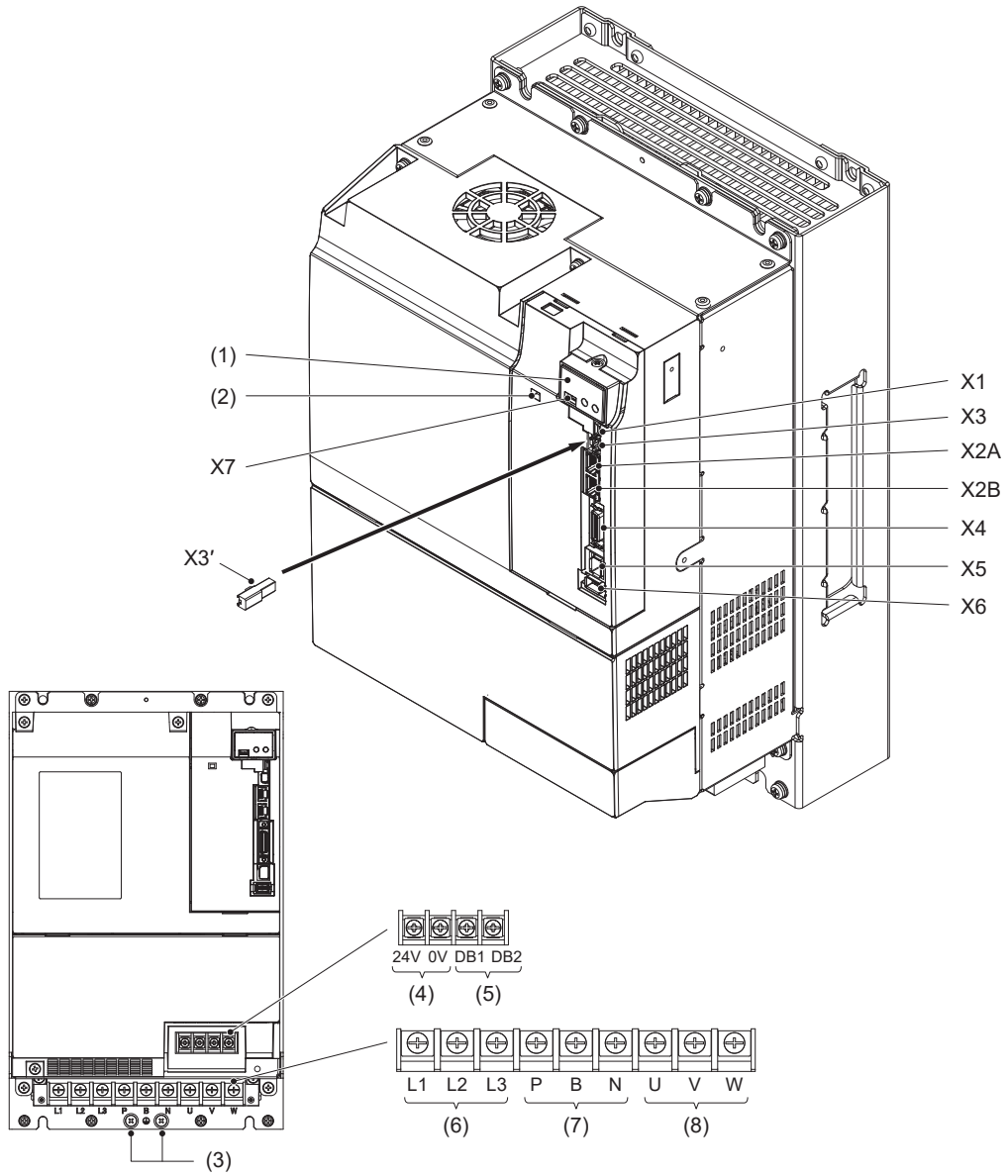


| | | | |
|---|---|---|---|
| X1 | USB connector<br>UB-M5BR-S14-4S (LF) (SN) (JST) equivalent | | |
| X2A | RTEX connector (RX)<br>MOD-WRJ88LY1G-TP+ (HTK) equivalent | X2B | RTEX connector (TX)<br>MOD-WRJ88LY1G-TP+ (HTK) equivalent |
| X3 | Safety function connector<br>CIF-HS08SK-071-TB (LF) equivalent | X3′ | Safety bypass plug<br>CIF-PB08AK-GF1R (JST) |
| X4 | Parallel I/O connector<br>DF02R050NA2 (JAE) equivalent | X5 | Feedback scale connector<br>MUF-RS10SK-GKX-TB (LF) (JST) equivalent |
| X6 | CS signal connector<br>3E106-2230KV (3M) equivalent | X7 | Analog monitor connector<br>533984005 (Molex) equivalent |
| (1) | Front panel | (2) | Charge lamp |
| (3) | Earth connection screw | (4) | Control power supply input |
| (5) | External DB control connection | (6) | Main power supply input |
| (7) | Regenerative resistor connection | (8) | Motor output |

* Remove the safety bypass plug when wiring to X3.

## 5.12 Example nameplate

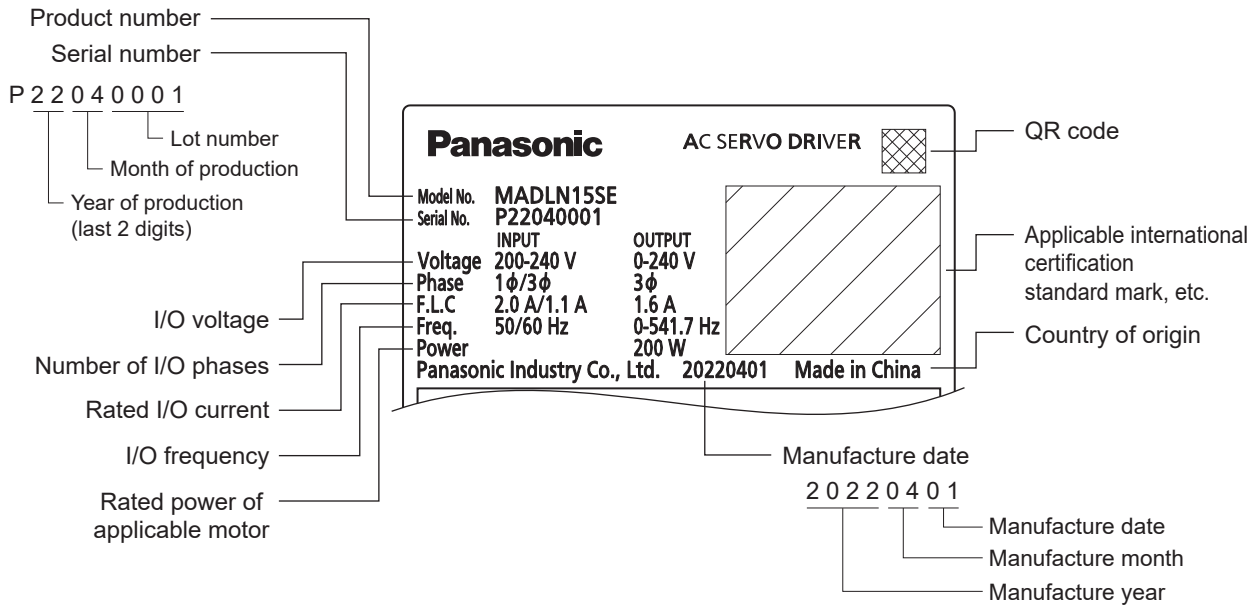


Although serial numbers range from 1 to 33999, they are shown on the name plate in 4-digit format shown as shown below.

The letters “I” and “O” are not used for the fourth digit.

| Value of serial number | Notation on the nameplate |
|---|---|
| 1 – 9999 | 0001 – 9999 |
| 10000 – 10999 | A000 – A999 |
| 11000 – 11999 | B000 – B999 |
| ⋮ | ⋮ |
| 17000 – 17999 | H000 – H999 |
| 18000 – 18999 | J000 – J999 |
| ⋮ | ⋮ |
| 22000 – 22999 | N000 – N999 |
| 23000 – 23999 | P000 – P999 |
| ⋮ | ⋮ |
| 33000 – 33999 | Z000 – Z999 |

## 5.13 Front panel

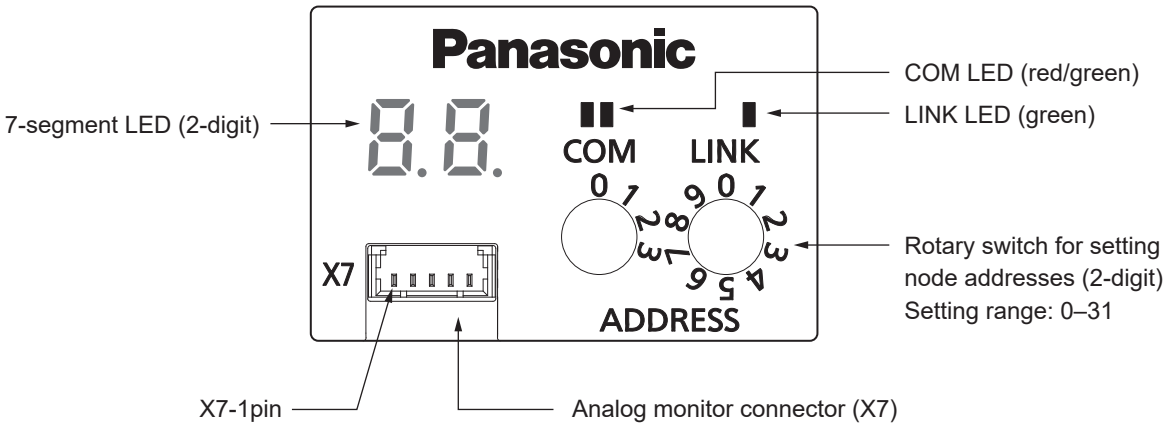

# 6 Dimensions

Each size has the same external dimensions for the basic and multifunction types (figures show the multifunction type).

Some dimensions for the 400 V model are different (see note).

## 6.1 Size A 100 V/200 V

**Base-mounted installation (Standard: Rear-mounted)**

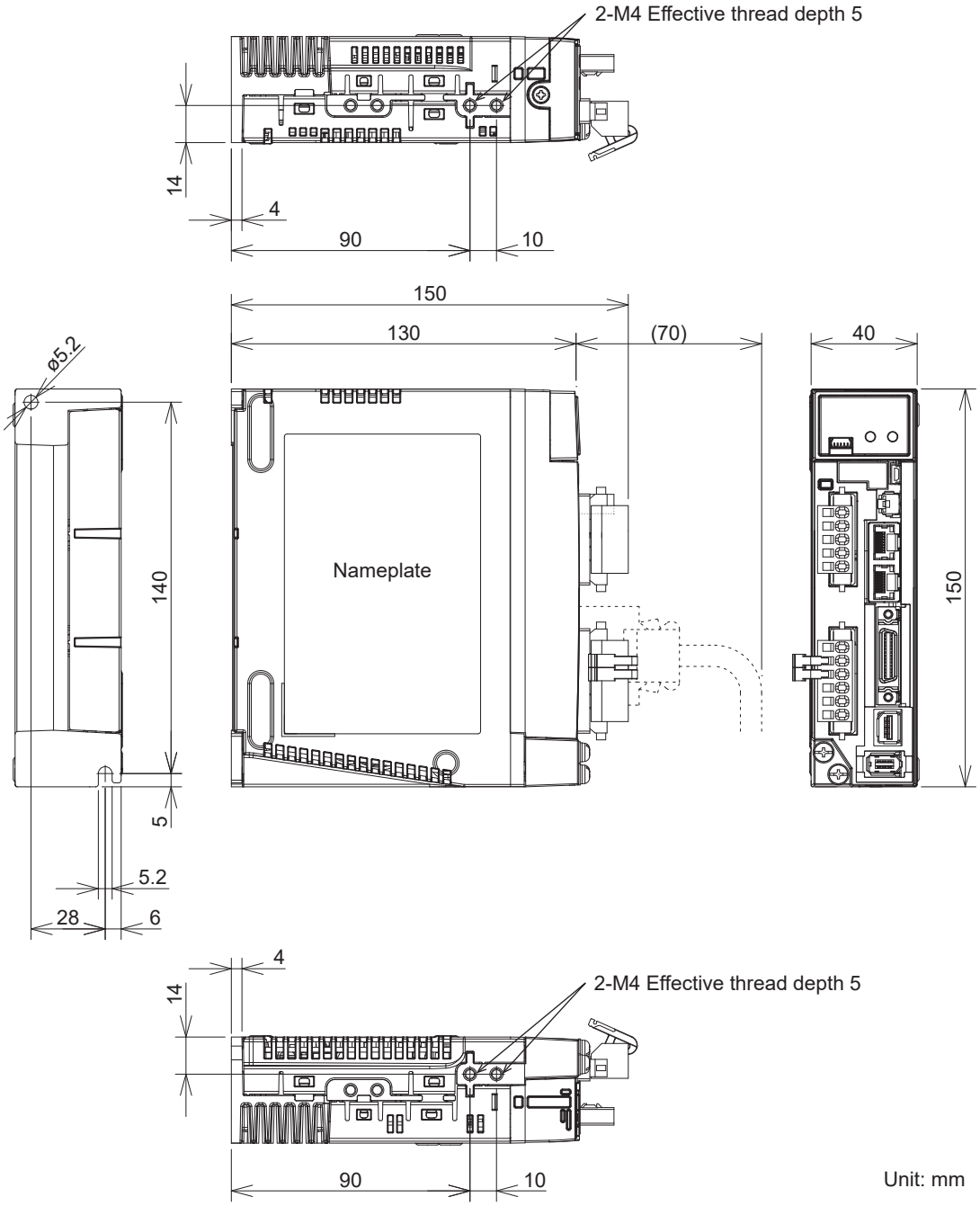


*1 Do not use screw holes for which no dimensions are shown.

**Rack-mounted installation (Using optional parts: Front-mounted)**

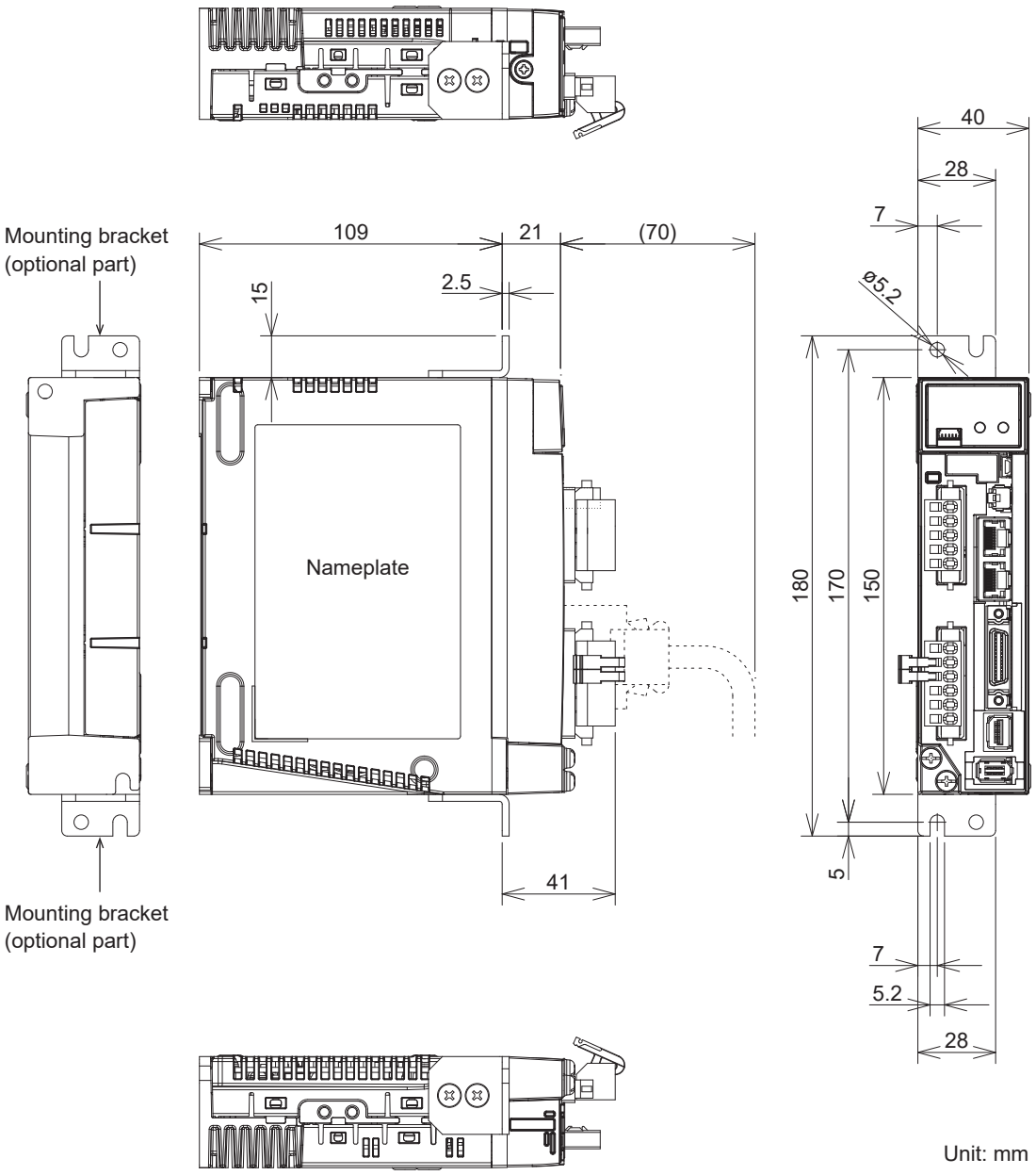


*1 Do not use screw holes for which no dimensions are shown.

*2 Mounting brackets are optional parts. They are not included with the product.

## 6.2 Size B 100 V/200 V

**Base-mounted installation (Standard: Rear-mounted)**

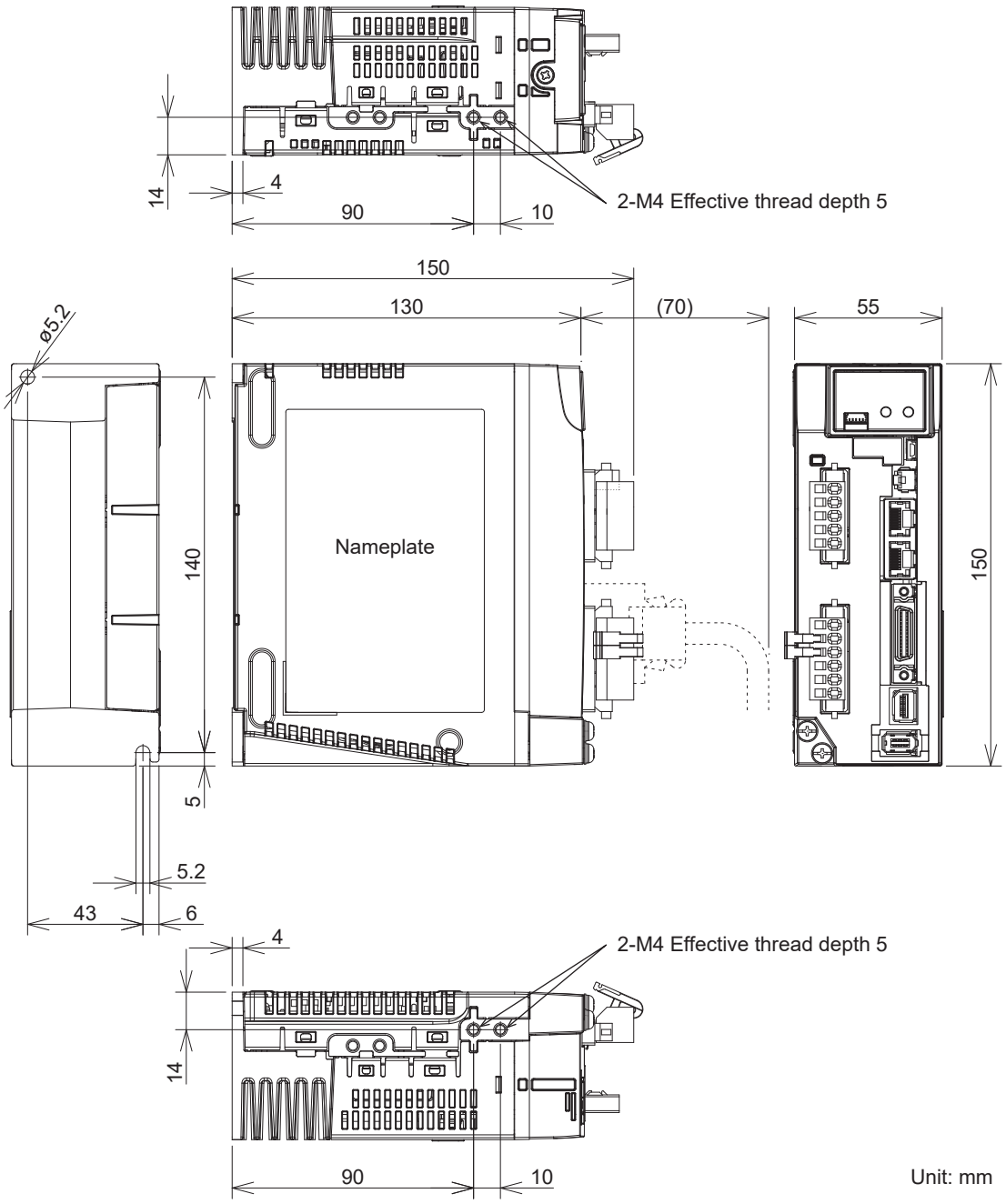


*1 Do not use screw holes for which no dimensions are shown.

**Rack-mounted installation (Using optional parts: Front-mounted)**

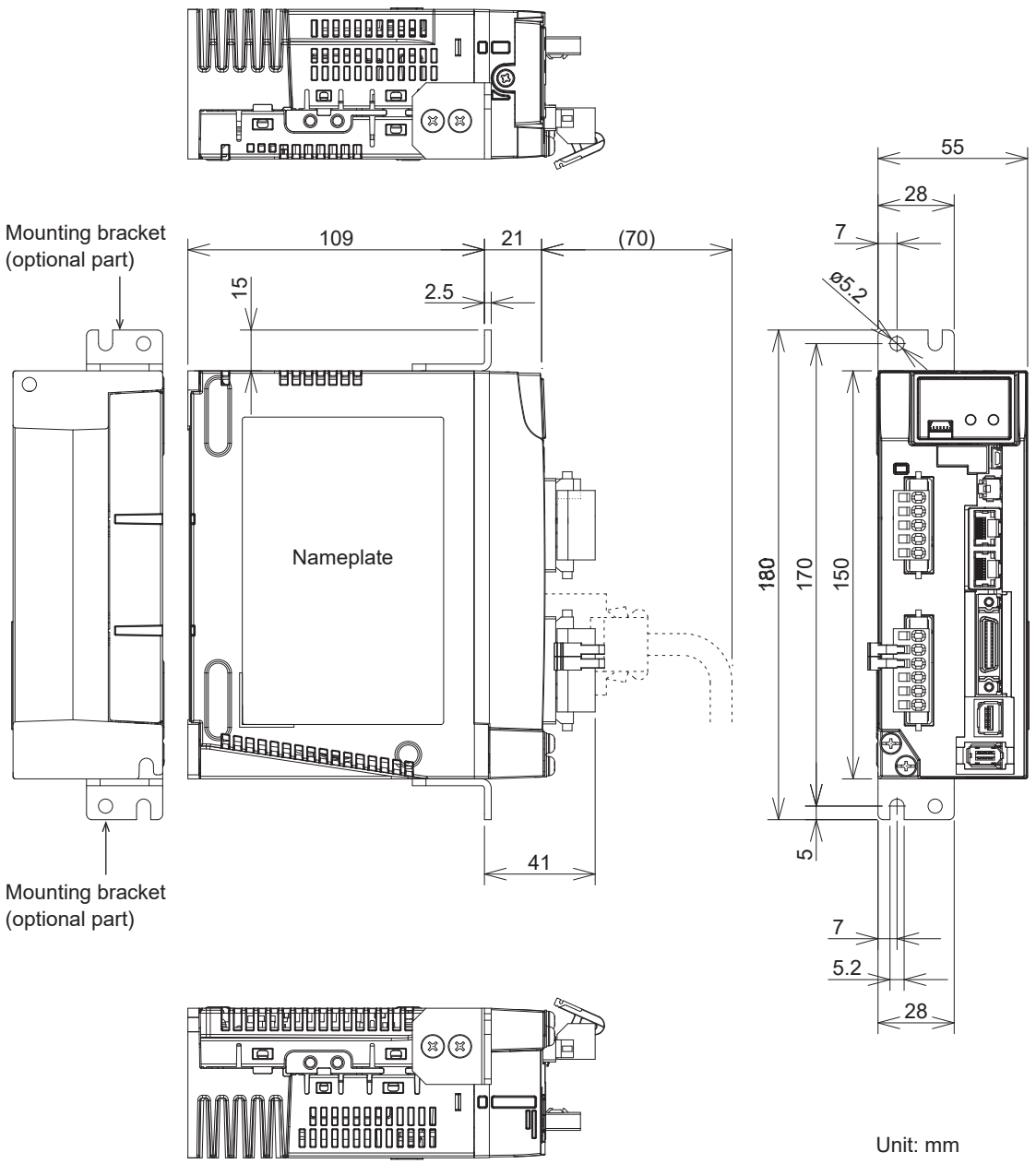


*1 Do not use screw holes for which no dimensions are shown.

*2 Mounting brackets are optional parts. They are not included with the product.

## 6.3 Size C 100 V/200 V

### Base-mounted installation (Standard: Rear-mounted)

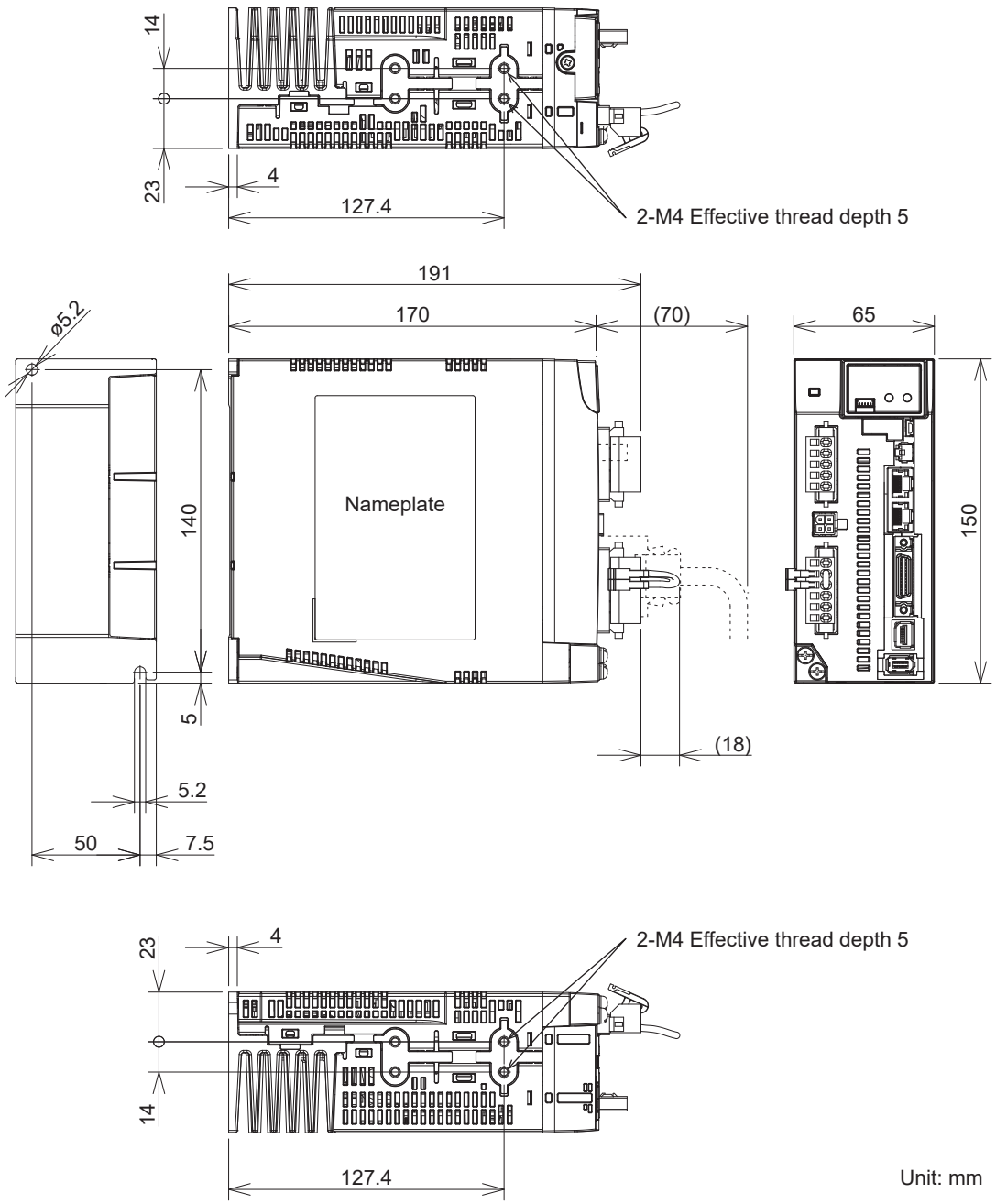


*1 Do not use screw holes for which no dimensions are shown.

**Rack-mounted installation (Using optional parts: Front-mounted)**

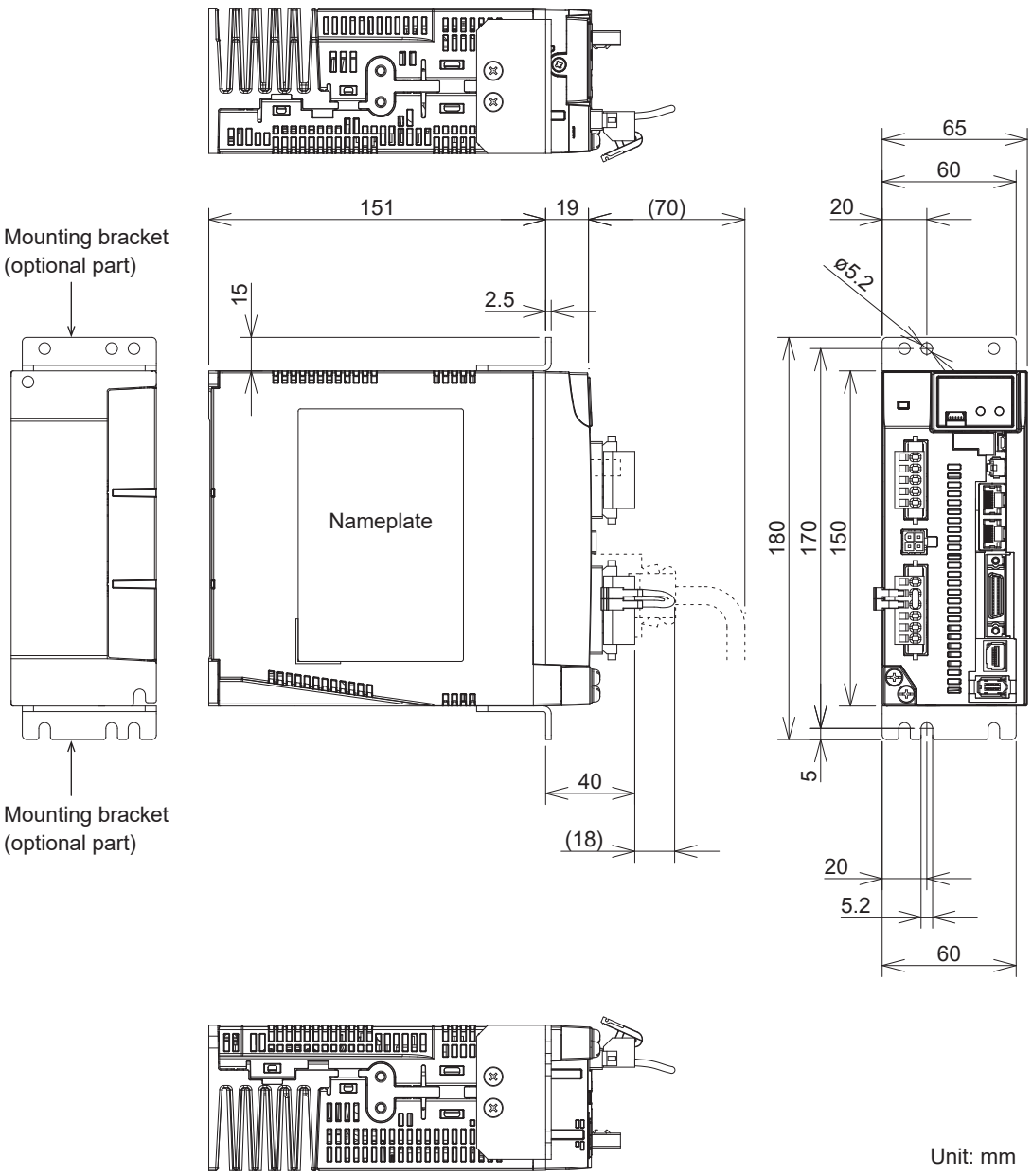


*1 Do not use screw holes for which no dimensions are shown.

*2 Mounting brackets are optional parts. They are not included with the product.

## 6.4 Size D 200 V/400 V

### Base-mounted installation (Standard: Rear-mounted)

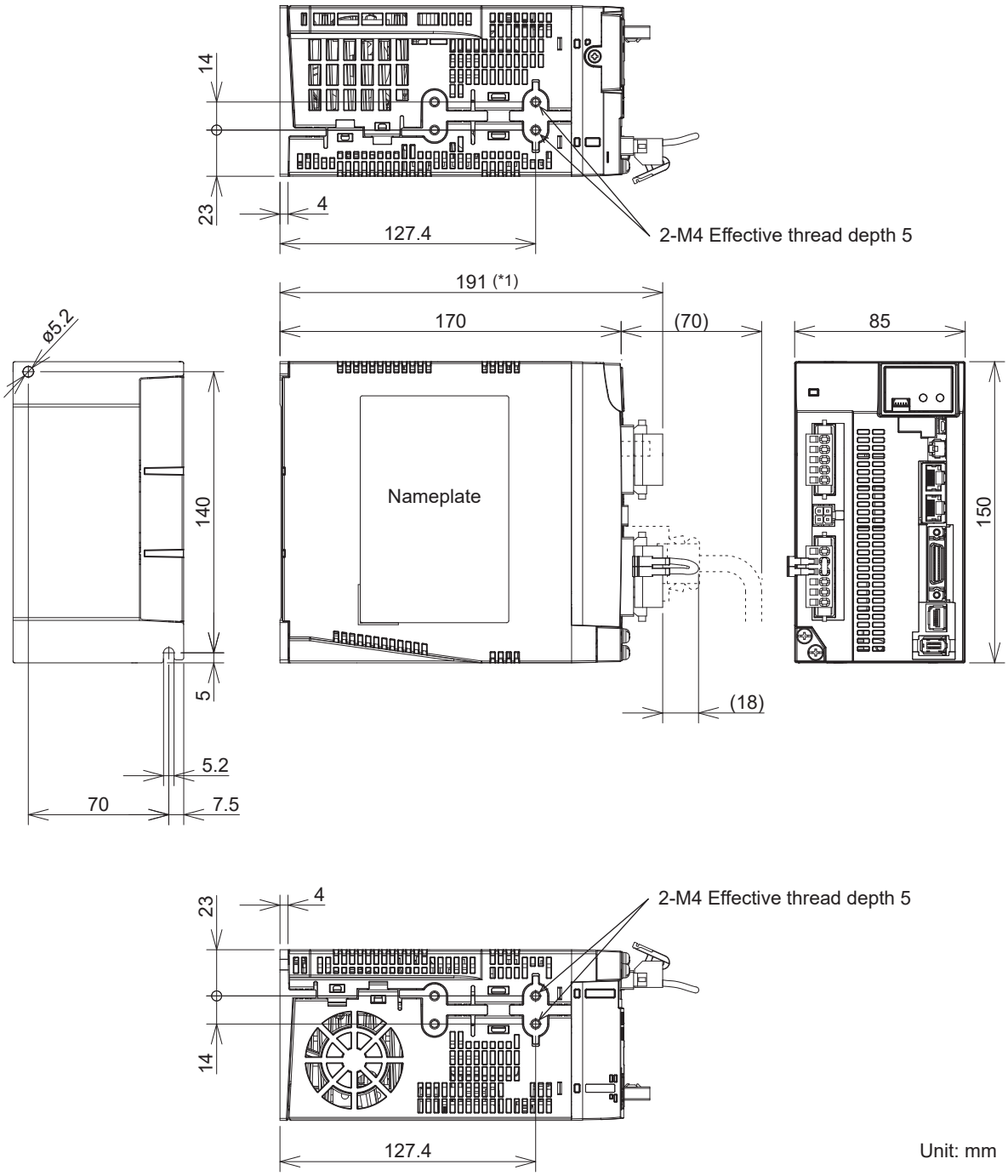


*1 For the 400 V model, this dimension is 188 mm.

*2 Do not use screw holes for which no dimensions are shown.

**Rack-mounted installation (Using optional parts: Front-mounted)**

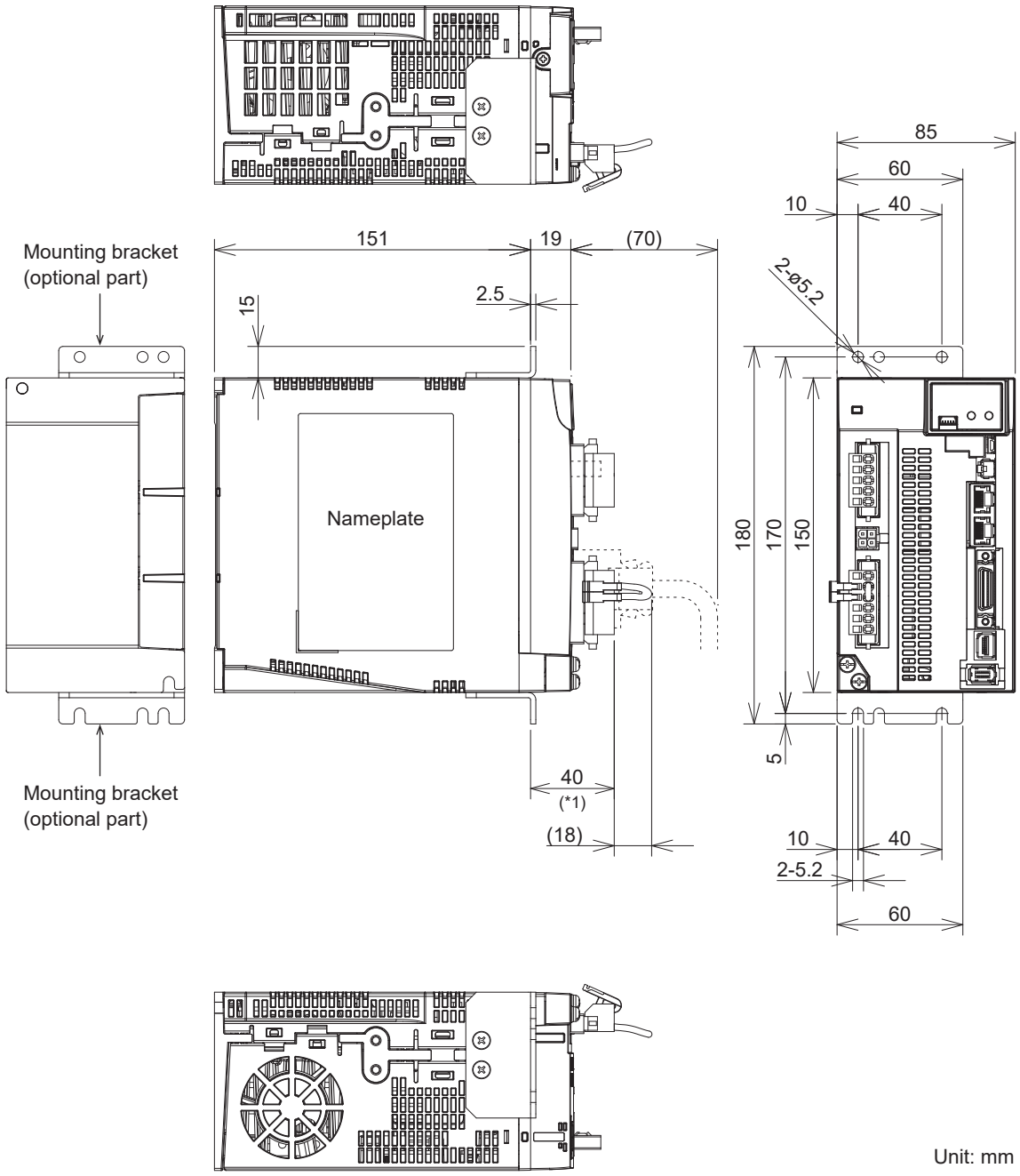


*1 For the 400 V model, this dimension is 37 mm.

*2 Do not use screw holes for which no dimensions are shown.

*3 Mounting brackets are optional parts. They are not included with the product.

## 6.5 Size E 200 V/400 V

### Rack-mounting installation (Standard mounting bracket position: Front-mounted)

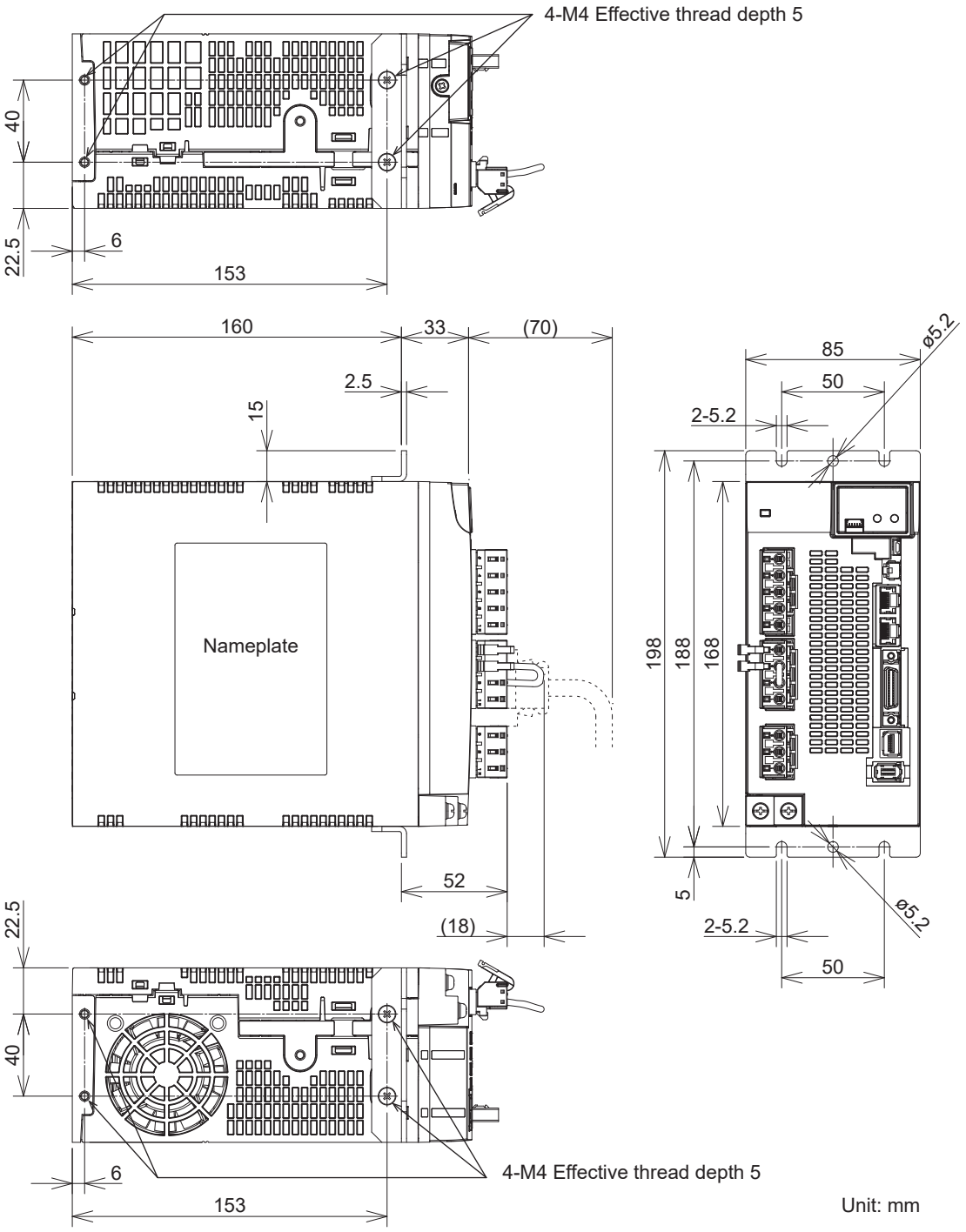


*1 Do not use screw holes for which no dimensions are shown.

*2 When installing the servo driver, secure it in the four U-shaped notches on the mounting bracket.

**Base-mounted installation (Modified mounting bracket position: Rear-mounted)**

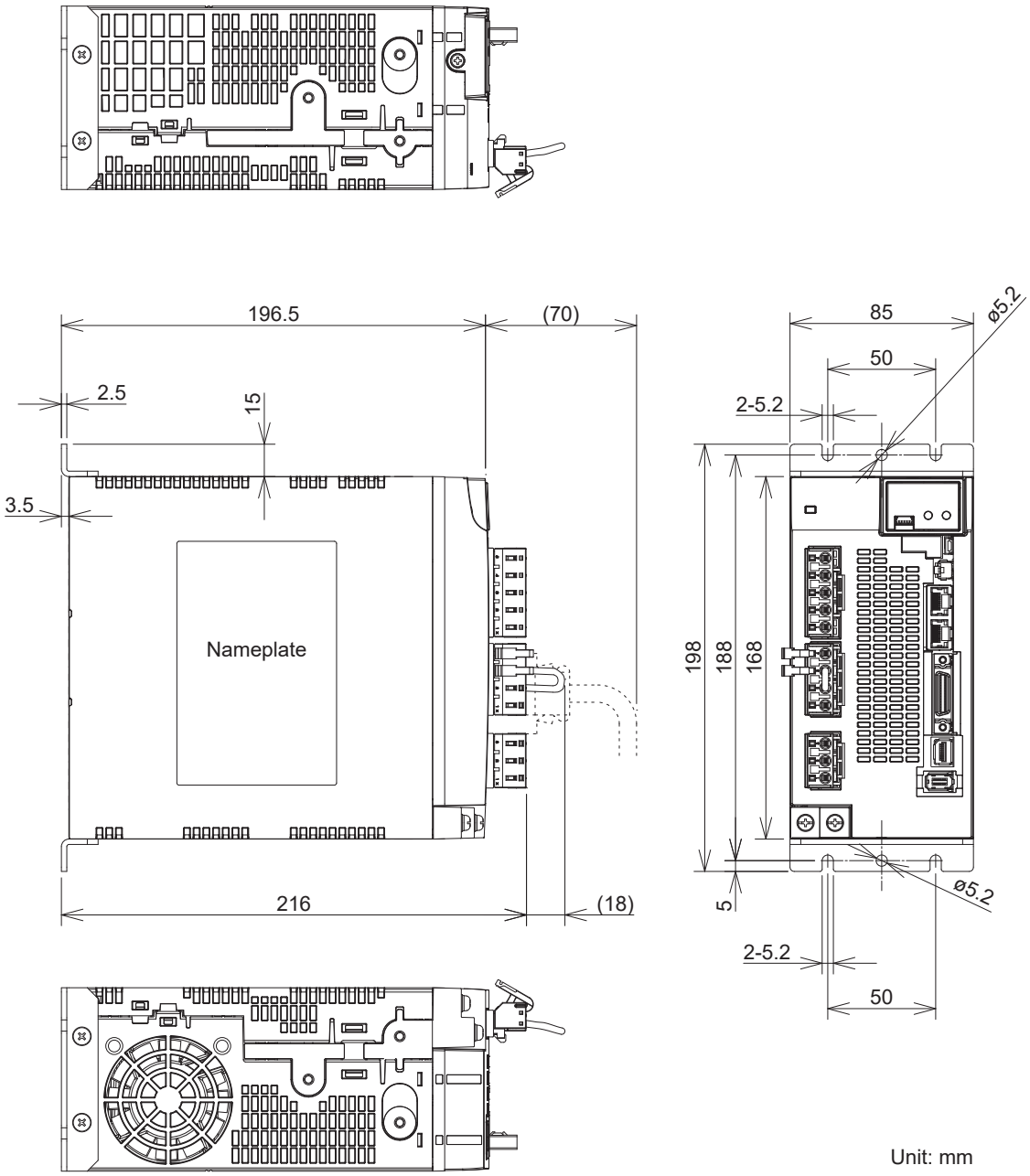


*1 Do not use screw holes for which no dimensions are shown.

*2 サ When installing the servo driver, secure it in the four U-shaped notches on the mounting bracket.

## 6.6 Size F 200 V/400 V

**Rack-mounting installation (Standard mounting bracket position: Front-mounted)**

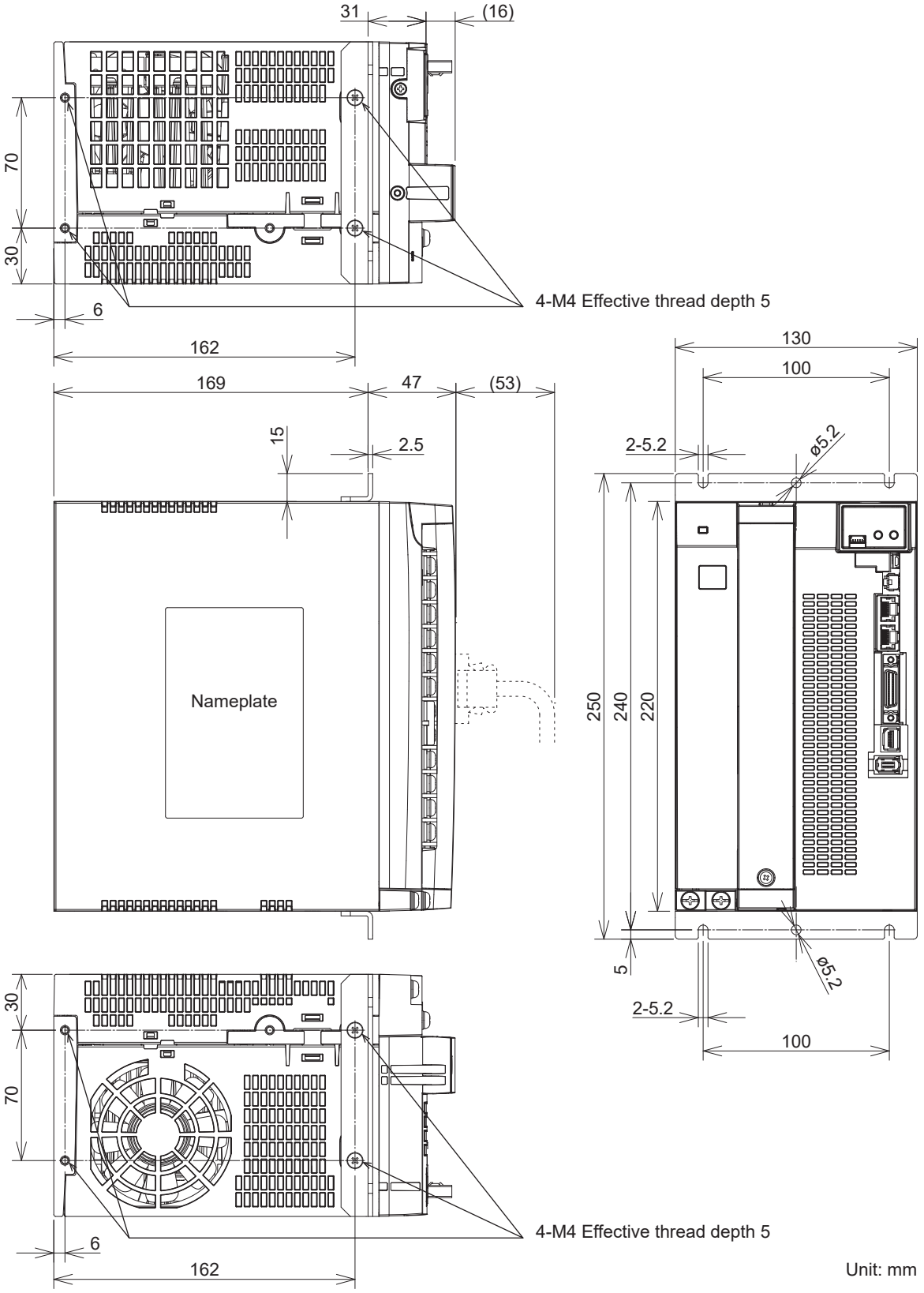


*1 Do not use screw holes for which no dimensions are shown.

*2 When installing the servo driver, secure it in the four U-shaped notches on the mounting bracket.

**Base-mounted installation (Modified mounting bracket position: Rear-mounted)**

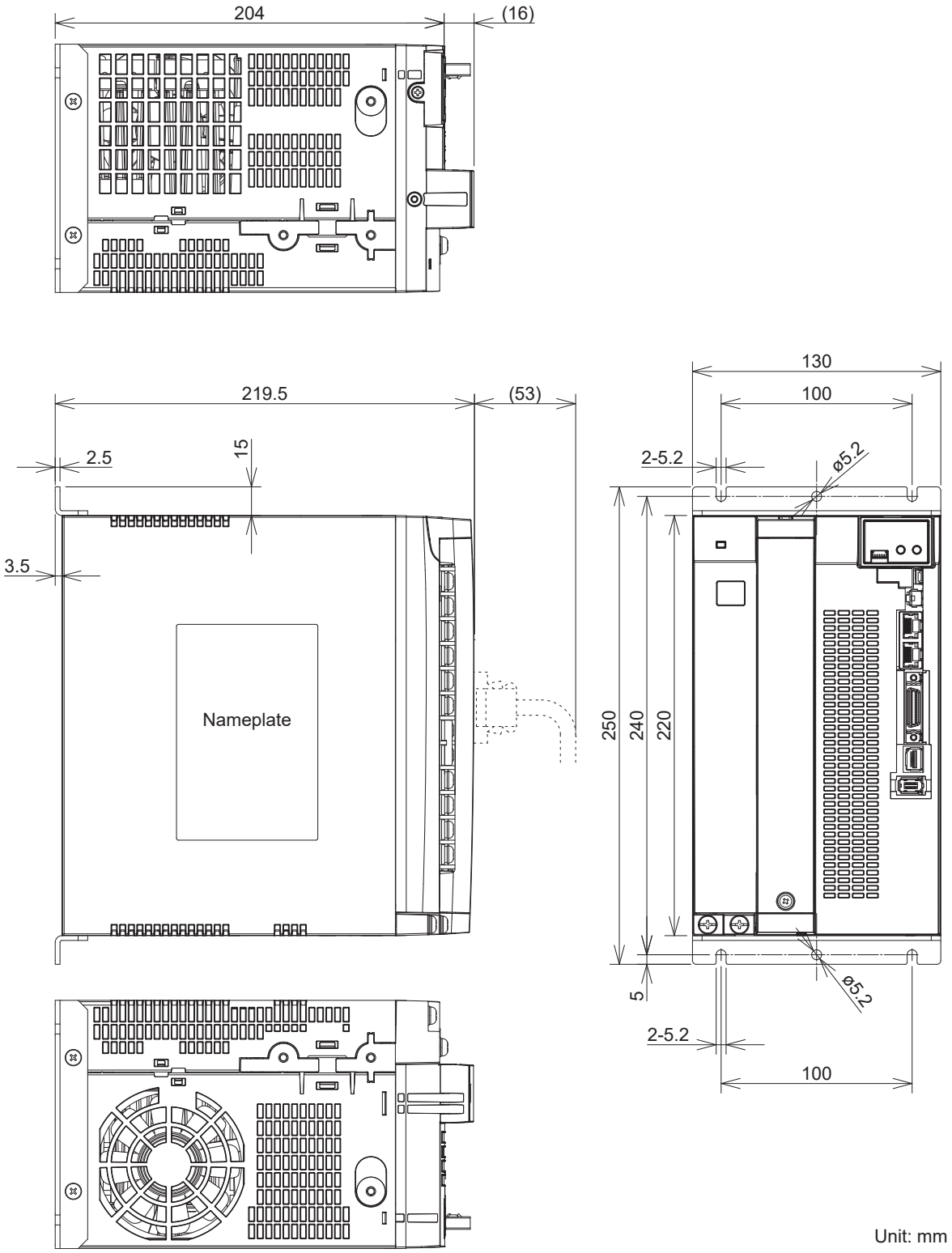


*1 Do not use screw holes for which no dimensions are shown.

*2 When installing the servo driver, secure it in the four U-shaped notches on the mounting bracket.

## 6.7 Size G 200 V/400 V

### Rack-mounting installation (Standard mounting bracket position: Front-mounted)

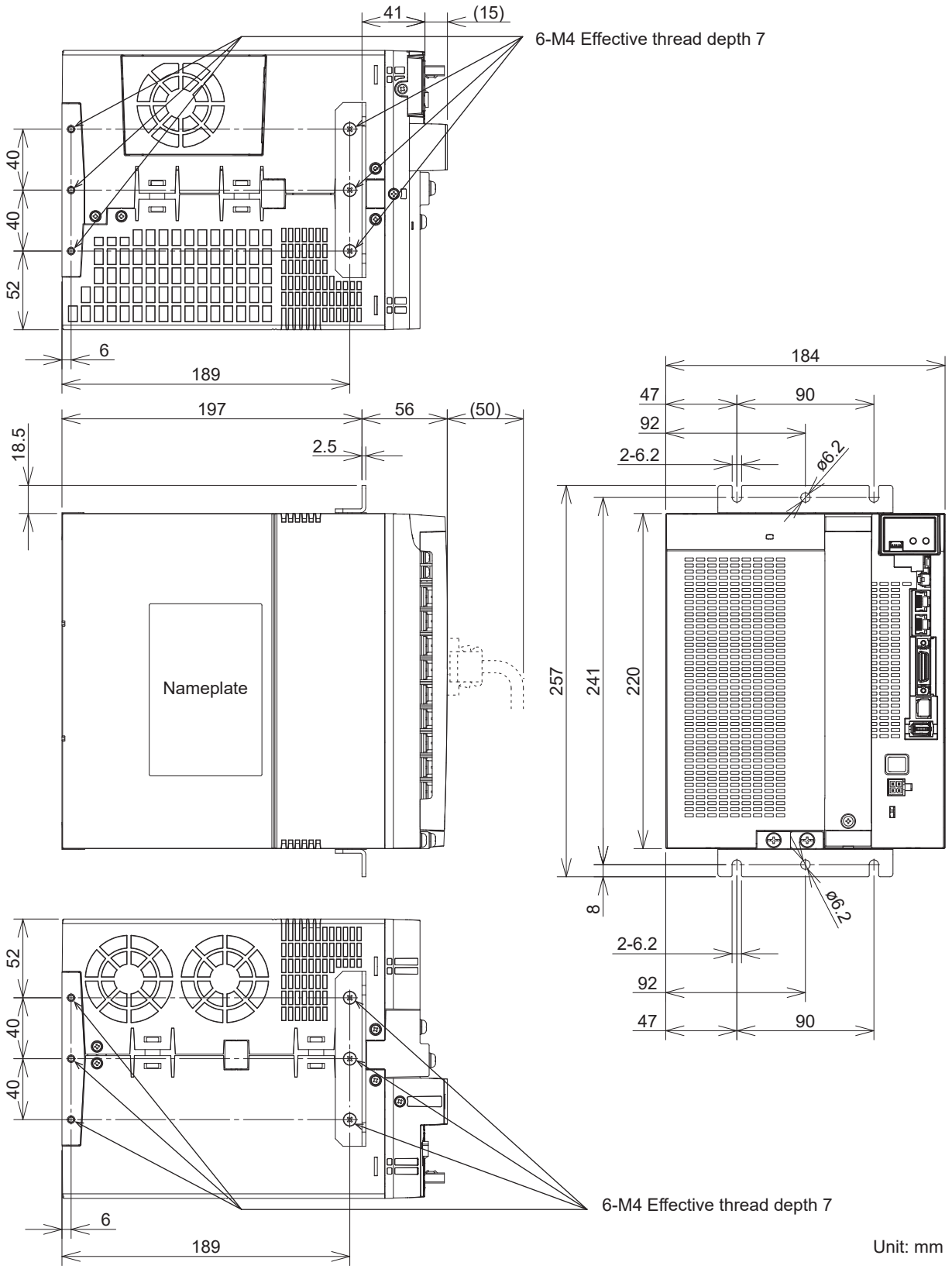


*1 Do not use screw holes for which no dimensions are shown.

*2 When installing the servo driver, secure it in the four U-shaped notches on the mounting bracket.

**Base-mounted installation (Modified mounting bracket position: Rear-mounted)**

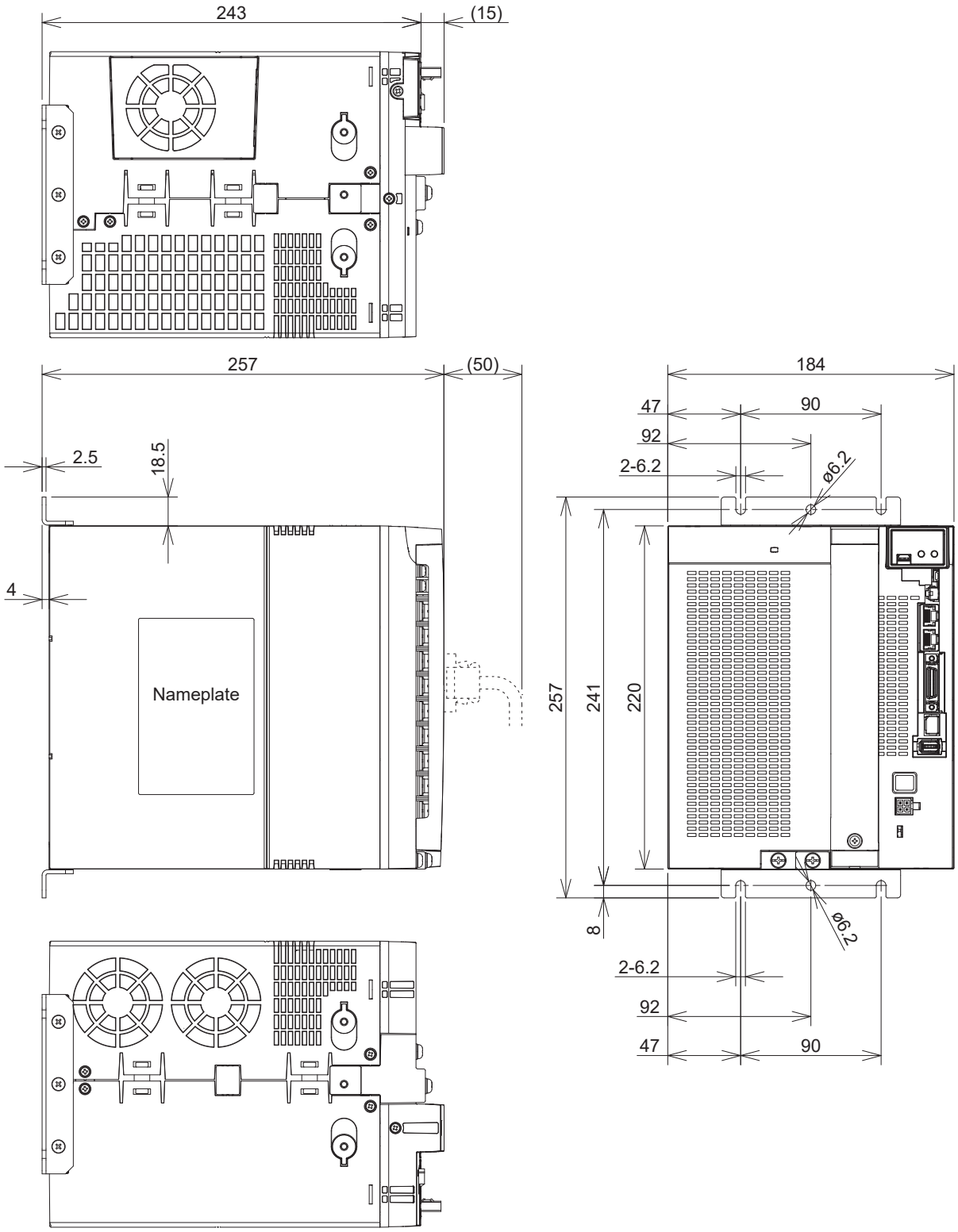


Unit: mm

*1 Do not use screw holes for which no dimensions are shown.

*2 When installing the servo driver, secure it in the four U-shaped notches on the mounting bracket.

## 6.8 Size H 200 V/400 V

### Base-mounted installation (Rear-mounted)

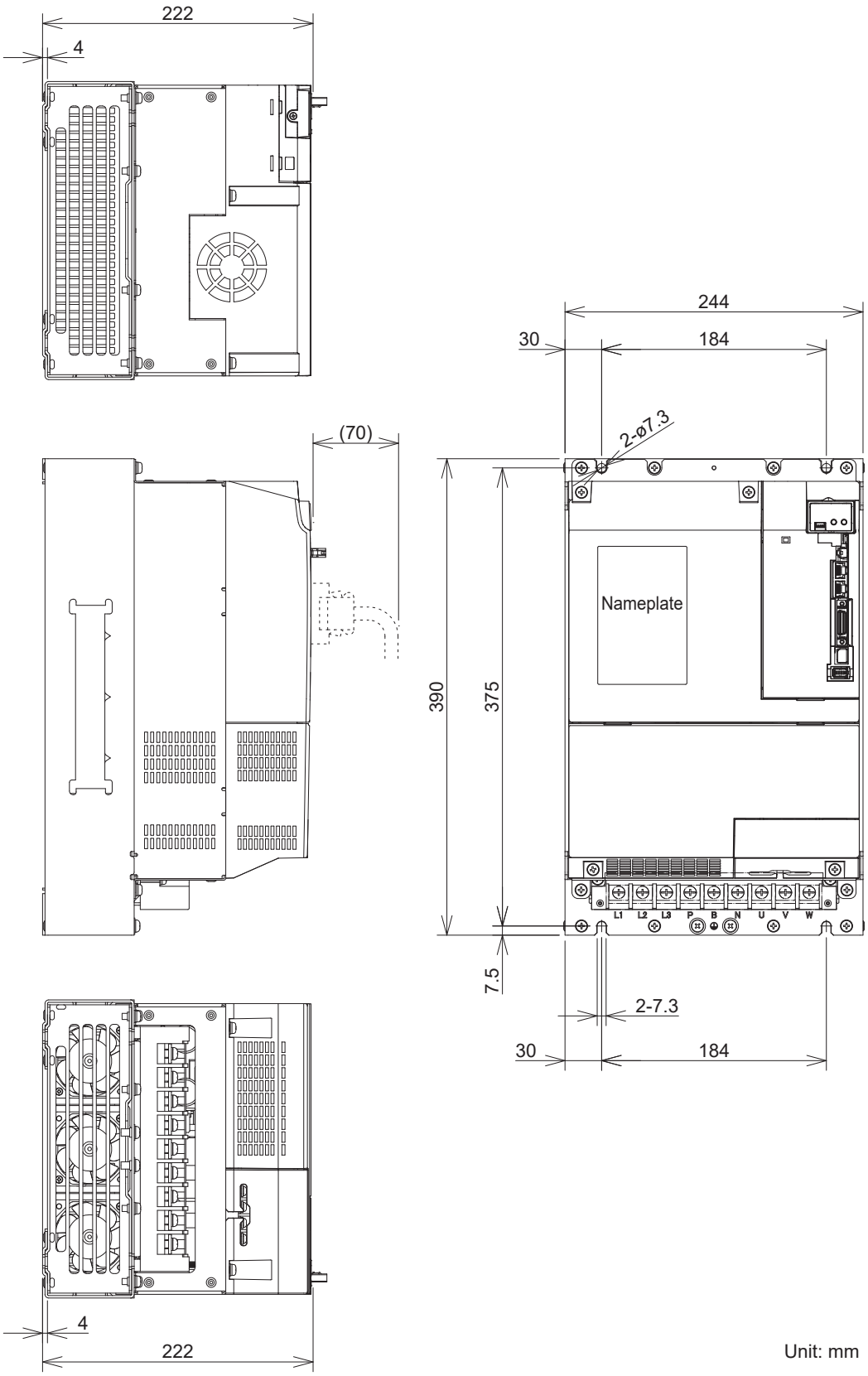


*1 Do not use screw holes for which no dimensions are shown.

# 7 Configuration of Connectors and Terminal Blocks

## 7.1 Power Connectors XA, XB, XC, XD and Terminal Blocks

### 7.1.1 Size A, B 100 V/200 V

| | Pin No. | Symbol | Name | Description | |
|---|---|---|---|---|---|
| XA | 5 | L1 | Main power supply input terminal | 100 V | Single-phase 100–120 V, -15% to +10%, 50/60 Hz<br>Connect to terminals L1 and L3. |
| | 4 | L2 | | | |
| | 3 | L3 | | 200 V | Single-phase/3-phase 200–240 V, -15% to +10%, 50/60 Hz<br>For single-phase, connect to terminals L1 and L3. |
| | 2 | L1C | Control power supply input terminal | 100 V | Single-phase 100–120 V, -15% to +10%, 50/60 Hz |
| | 1 | L2C | | 200 V | Single-phase 200–240 V, -15% to +10%, 50/60 Hz |
| XB | 6 | P | Regenerative resistor connection terminal | ● When using an external regenerative resistor (customer-supplied), connect the external regenerative resistor between P and B.<br>In addition, parameters must be used for regenerative resistor settings.<br>For details, refer to “Technical Reference - Functional Specification”.<br>● Do not connect anything to the N terminal. | |
| | 5 | N | | | |
| | 4 | B | | | |
| | 3 | U | Motor output terminal | ● Connect each phase of the motor winding.<br>U: U phase, V: V phase, W: W phase<br>● Connect the following when using the voice coil motor.<br>U: U-phase, W: W-phase<br>Do not connect anything for V-phase.<br>For details, refer to “Technical Reference - Functional Specification”. | |
| | 2 | V | | | |
| | 1 | W | | | |
| | ⏚ | ⏚ | Ground terminal | ● Connect with the motor E terminal to ground to earth. | |

* Tighten the M4 grounding screw to a torque of 1.0–1.2 N·m.

### 7.1.2 Size C, D 100 V/200 V

| | Pin No. | Symbol | Name | Description | |
|---|---|---|---|---|---|
| XA | 5 | L1 | Main power supply input terminal | 100 V | Single-phase 100–120 V, -15% to +10%, 50/60 Hz<br>Connect to terminals L1 and L3. |
| | 4 | L2 | | | |
| | 3 | L3 | | 200 V | Single-phase/3-phase 200–240 V, -15% to +10%, 50/60 Hz<br>For single-phase, connect to terminals L1 and L3. |
| | 2 | L1C | Control power supply input terminal | 100 V | Single-phase 100–120 V, -15% to +10%, 50/60 Hz |
| | 1 | L2C | | 200 V | Single-phase 200–240 V, -15% to +10%, 50/60 Hz |
| XC | 4 | N | – | ● Do not connect anything to this connector. | |
| | 3 | | | | |
| | 2 | P | | | |
| | 1 | | | | |
| XB | 6 | P | Regenerative resistor connection terminal | ● Normally, short circuit between RB and B.<br>● When using an external regenerative resistor (customer-supplied), open between RB and B and connect the external regenerative resistor between P and B.<br>In addition, parameters must be used for regenerative resistor settings.<br>For details, refer to “Technical Reference - Functional Specification”. | |
| | 5 | RB | | | |
| | 4 | B | | | |
| | 3 | U | Motor output terminal | ● Connect each phase of the motor winding.<br>U: U phase, V: V phase, W: W phase<br>● Connect the following when using the voice coil motor.<br>U: U-phase, W: W-phase<br>Do not connect anything for V-phase.<br>For details, refer to “Technical Reference - Functional Specification”. | |
| | 2 | V | | | |
| | 1 | W | | | |
| | ⏚ | ⏚ | Ground terminal | ● Connect with the motor E terminal to ground to earth. | |

* Tighten the M4 grounding screw to a torque of 1.0–1.2 N·m.

### 7.1.3 Size E 200 V

| | Pin No. | Symbol | Name | Description | |
|---|---|---|---|---|---|
| XA | 5 | L1 | Main power supply input terminal | 200 V | 3-phase 200–240 V, -15% to +10%, 50/60 Hz |
| | 4 | L2 | | | |
| | 3 | L3 | | | |
| | 2 | L1C | Control power supply input terminal | 200 V | Single-phase 200–240 V, -15% to +10%, 50/60 Hz |
| | 1 | L2C | | | |
| XC | 4 | P | Regenerative resistor connection terminal | ● Normally, short circuit between RB and B.<br>● When using an external regenerative resistor (customer-supplied), open between RB and B and connect the external regenerative resistor between P and B.<br>In addition, parameters must be used for regenerative resistor settings.<br>For details, refer to “Technical Reference - Functional Specification”.<br>● Do not connect anything to the N terminal. | |
| | 3 | RB | | | |
| | 2 | B | | | |
| | 1 | N | | | |
| XB | 3 | U | Motor output terminal | ● Connect each phase of the motor winding.<br>U: U phase, V: V phase, W: W phase<br>● Connect the following when using the voice coil motor.<br>U: U-phase, W: W-phase<br>Do not connect anything for V-phase.<br>For details, refer to “Technical Reference - Functional Specification”. | |
| | 2 | V | | | |
| | 1 | W | | | |
| | ⏚ | ⏚ | Ground terminal | ● Connect with the motor E terminal to ground to earth. | |

* Tighten the M4 grounding screw to a torque of 1.0–1.2 N·m.

### 7.1.4 Size F 200 V

Use terminal blocks.

| | Terminal block No. (Upper to lower) | Symbol | Name | Description |
|---|---|---|---|---|
| Terminal block | 1 | L1 | Main power supply input terminal | 3-phase 200–240 V, -15% to +10%, 50/60 Hz |
| | 2 | L2 | | |
| | 3 | L3 | | |
| | 4 | L1C | Control power supply input terminal | Single-phase 200–240 V, -15% to +10%, 50/60 Hz |
| | 5 | L2C | | |
| | 6 | P | Regenerative resistor connection terminal | ● Normally, short circuit between RB and B.<br>● When using an external regenerative resistor (customer-supplied), open between RB and B and connect the external regenerative resistor between P and B.<br>In addition, parameters must be used for regenerative resistor settings.<br>For details, refer to “Technical Reference - Functional Specification”.<br>● Do not connect anything to the N terminal. |
| | 7 | RB | | |
| | 8 | B | | |
| | 9 | N | | |
| | 10 | U | Motor output terminal | ● Connect each phase of the motor winding.<br>U: U phase, V: V phase, W: W phase<br>● Connect the following when using the voice coil motor.<br>U: U-phase, W: W-phase<br>Do not connect anything for V-phase.<br>For details, refer to “Technical Reference - Functional Specification”. |
| | 11 | V | | |
| | 12 | W | | |
| | ⏚ | ⏚ | Ground terminal | ● Connect with the motor E terminal to ground to earth. |

* Tighten the M5 grounding screw to a torque of 1.8–2.0 N·m.

* Tighten the M5 terminal block screw to a torque of 1.8–2.0 N·m.

* Tighten the M3 screw for securing the terminal block cover to a torque of 0.19–0.21 N·m.

* Exceeding the maximum tightening torque may cause damage.

### 7.1.5 Size G 200 V

Use terminal blocks.

| | Terminal block No. (Upper to lower) | Symbol | Name | Description |
|---|---|---|---|---|
| Upper | 1 | L1C | Control power supply input terminal | Single-phase 200–240 V, -15% to +10%, 50/60 Hz |
| | 2 | L2C | | |
| Lower | 1 | L1 | Main power supply input terminal | 3-phase 200–240 V, -15% to +10%, 50/60 Hz |
| | 2 | L2 | | |
| | 3 | L3 | | |
| | 4 | P | Regenerative resistor connection terminal | ● When using an external regenerative resistor (customer-supplied), connect the external regenerative resistor between P and B.<br>In addition, parameters must be used for regenerative resistor settings.<br>For details, refer to “Technical Reference - Functional Specification”.<br>● Do not connect anything to the N terminal. |
| | 5 | B | | |
| | 6 | N | | |
| | 7 | U | Motor output terminal | ● Connect each phase of the motor winding.<br>U: U phase, V: V phase, W: W phase<br>● Connect the following when using the voice coil motor.<br>U: U-phase, W: W-phase<br>Do not connect anything for V-phase.<br>For details, refer to “Technical Reference - Functional Specification”. |
| | 8 | V | | |
| | 9 | W | | |
| | ⏚ | ⏚ | Ground terminal | ● Connect with the motor E terminal to ground to earth. |

Connector

| | Pin No. | Symbol | Name | Description |
|---|---|---|---|---|
| XE | 1 | DB1 | External dynamic brake control terminal | ● This terminal is used to control electromagnetic contactor MC for the external dynamic brake resistor (customer-supplied). Connect if necessary.<br>● The applied voltage between DB1 and DB2 should be less than AC 300 V and DC 100 V. |
| | 2 | DB2 | | |

* Tighten the M5 grounding screw to a torque of 1.8–2.0 N·m.

* Tighten the M3 terminal block (control power supply) screw to a torque of 0.4–0.6 N·m.

Exceeding the maximum tightening torque may damage the terminal block.

* Tighten the M5 terminal block (main power supply, regenerative resistor, motor) screw to a torque of 2.0–2.4 N·m.

Exceeding the maximum tightening torque may damage the terminal block.

* Tighten the M3 screw for securing the terminal block cover to a torque of 0.19–0.21 N·m.

Exceeding the maximum tightening torque may cause damage.

### 7.1.6 Size H 200 V

Use terminal blocks.

| | Terminal block No. (From the left) | Symbol | Name | Description |
|---|---|---|---|---|
| Upper | 1 | L1C | Control power supply input terminal | Single-phase 200–240 V, -15% to +10%, 50/60 Hz |
| | 2 | L2C | | |
| | 3 | DB1 | Dynamic brake resistor connection terminal | ● This terminal is used to control electromagnetic contactor MC for the external dynamic brake resistor (customer-supplied). Connect if necessary.<br>● The applied voltage between DB1 and DB2 should be less than AC 300 V and DC 100 V. |
| | 4 | DB2 | | |
| Lower | 1 | L1 | Main power supply input terminal | 3-phase 200–240 V, -15% to +10%, 50/60 Hz |
| | 2 | L2 | | |
| | 3 | L3 | | |
| | 4 | P | Regenerative resistor connection terminal | ● When using an external regenerative resistor (customer-supplied), connect the external regenerative resistor between P and B.<br>In addition, parameters must be used for regenerative resistor settings.<br>For details, refer to “Technical Reference - Functional Specification”.<br>● Do not connect anything to the N terminal. |
| | 5 | B | | |
| | 6 | N | | |
| | 7 | U | Motor connection terminal | ● Connect each phase of the motor winding.<br>U: U phase, V: V phase, W: W phase<br>● Connect the following when using the voice coil motor.<br>U: U-phase, W: W-phase<br>Do not connect anything for V-phase.<br>For details, refer to “Technical Reference - Functional Specification”. |
| | 8 | V | | |
| | 9 | W | | |
| | ⏚ | ⏚ | Ground terminal | ● Connect with the motor E terminal to ground to earth. |

* Tighten the M6 grounding screw to a torque of 2.4–2.6 N·m.

* Tighten the M4 terminal block (upper: control power supply, dynamic brake) screw to a torque of 0.7–1.0 N·m. Exceeding the maximum tightening torque may damage the terminal block.

* Tighten the M6 terminal block (lower: main power supply, regenerative resistor, motor) screw to a torque of 2.2–2.5 N·m. Exceeding the maximum tightening torque may damage the terminal block.

* Tighten the M3 screw for securing terminal block cover 1 (transparent) to a torque of 0.19–0.21 N·m.

* Tighten the M5 screw for securing terminal block cover 2 (black) to a torque of 2.0–2.5 N·m.

### 7.1.7 Size D, E 400 V

| | Pin No. | Symbol | Name | Description |
|---|---|---|---|---|
| XD | 1 | 24V | Control power supply input terminal | DC 24 V, ±15 % |
| | 2 | 0V | | |
| XA | 3 | L1 | Main power supply input terminal | 3-phase 380Y/220-480Y/277 V, -15% to +10%, 50/60 Hz<br>TN (ground the neutral point to earth) |
| | 2 | L2 | | |
| | 1 | L3 | | |
| XC | 4 | P | Regenerative resistor connection terminal | ● Normally, short circuit between RB and B.<br>● When using an external regenerative resistor (customer-supplied), open between RB and B and connect the external regenerative resistor between P and B.<br>In addition, parameters must be used for regenerative resistor settings.<br>For details, refer to “Technical Reference - Functional Specification”.<br>● Do not connect anything to the N terminal. |
| | 3 | RB | | |
| | 2 | B | | |
| | 1 | N | | |
| XB | 3 | U | Motor output terminal | ● Connect each phase of the motor winding.<br>U: U phase, V: V phase, W: W phase<br>● Connect the following when using the voice coil motor.<br>U: U-phase, W: W-phase<br>Do not connect anything for V-phase.<br>For details, refer to “Technical Reference - Functional Specification”. |
| | 2 | V | | |
| | 1 | W | | |
| | ⏚ | ⏚ | Ground terminal | ● Connect with the motor E terminal to ground to earth. |

* Tighten the M4 grounding screw to a torque of 1.0–1.2 N·m.

### 7.1.8 Size F 400 V

Use terminal blocks.

| | Terminal block No. (Upper to lower) | Symbol | Name | Description |
|---|---|---|---|---|
| Terminal block | 1 | – | Free terminals | |
| | 2 | – | | |
| | 3 | L1 | Main power supply input terminal | 3-phase 380Y/220-480Y/277 V, -15% to +10%, 50/60 Hz<br>TN (ground the neutral point to earth) |
| | 4 | L2 | | |
| | 5 | L3 | | |
| | 6 | P | Regenerative resistor connection terminal | ● Normally, short circuit between RB and B.<br>● When using an external regenerative resistor (customer-supplied), open between RB and B and connect the external regenerative resistor between P and B.<br>In addition, parameters must be used for regenerative resistor settings.<br>For details, refer to “Technical Reference - Functional Specification”.<br>● Do not connect anything to the N terminal. |
| | 7 | RB | | |
| | 8 | B | | |
| | 9 | N | | |
| | 10 | U | Motor output terminal | ● Connect each phase of the motor winding.<br>U: U phase, V: V phase, W: W phase<br>● Connect the following when using the voice coil motor.<br>U: U-phase, W: W-phase<br>Do not connect anything for V-phase.<br>For details, refer to “Technical Reference - Functional Specification”. |
| | 11 | V | | |
| | 12 | W | | |
| | ⏚ | ⏚ | Ground terminal | ● Connect with the motor E terminal to ground to earth. |

Connector

| | Pin No. | Symbol | Name | Description |
|---|---|---|---|---|
| XD | 1 | 24V | Control power supply input terminal | DC 24 V, ±15 % |
| | 2 | 0V | | |

* Tighten the M5 grounding screw to a torque of 1.8–2.0 N·m.

* Tighten the M5 terminal block screw to a torque of 1.8–2.0 N·m.

* Tighten the M3 screw for securing the terminal block cover to a torque of 0.19–0.21 N·m.

* Exceeding the maximum tightening torque may cause damage.

### 7.1.9 Size G 400 V

Use terminal blocks.

| | Terminal block No. (Upper to lower) | Symbol | Name | Description |
|---|---|---|---|---|
| Upper | 1 | NC | Free terminals | |
| | 2 | NC | | |
| Lower | 1 | L1 | Main power supply input terminal | 3-phase 380Y/220-480Y/277 V, -15%～+10%, 50/60 Hz<br>TN (ground the neutral point to earth) |
| | 2 | L2 | | |
| | 3 | L3 | | |
| | 4 | P | Regenerative resistor connection terminal | ● When using an external regenerative resistor (customer-supplied), connect the external regenerative resistor between P and B.<br>In addition, parameters must be used for regenerative resistor settings.<br>For details, refer to “Technical Reference - Functional Specification”.<br>● Do not connect anything to the N terminal. |
| | 5 | B | | |
| | 6 | N | | |
| | 7 | U | Motor output terminal | ● Connect each phase of the motor winding.<br>U: U phase, V: V phase, W: W phase |
| | 8 | V | | |
| | 9 | W | | |
| | ⏚ | ⏚ | Ground terminal | ● Connect with the motor E terminal to ground to earth. |

Connector

| | Pin No. | Symbol | Name | Description |
|---|---|---|---|---|
| XD | 1 | 24V | Control power supply Input connector | DC 24 V, ±15 % |
| | 2 | 0V | | |
| XE | 1 | DB1 | External dynamic brake control terminal | ● This terminal is used to control electromagnetic contactor MC for the external dynamic brake resistor (customer-supplied). Connect if necessary.<br>● The applied voltage between DB1 and DB2 should be less than AC 300 V and DC 100 V. |
| | 2 | DB2 | | |

* Tighten the M5 grounding screw to a torque of 1.8–2.0 N·m.

* Tighten the M3 terminal block (control power supply) screw to a torque of 0.4–0.6 N·m.

Exceeding the maximum tightening torque may damage the terminal block.

* Tighten the M5 terminal block (main power supply, regenerative resistor, motor) screw to a torque of 2.0–2.4 N·m.

Exceeding the maximum tightening torque may damage the terminal block.

* Tighten the M3 screw for securing the terminal block cover to a torque of 0.19–0.21 N·m.

Exceeding the maximum tightening torque may cause damage.

### 7.1.10 Size H 400 V

Use terminal blocks.

| | Terminal block No. (Upper to lower) | Symbol | Name | Description |
|---|---|---|---|---|
| Upper | 1 | 24V | Control power supply input terminal | DC 24 V, ±15 % |
| | 2 | 0V | | |
| | 3 | DB1 | Dynamic brake resistor connection terminal | ● This terminal is used to control electromagnetic contactor MC for the external dynamic brake resistor (customer-supplied). Connect if necessary.<br>● The applied voltage between DB1 and DB2 should be less than AC 300 V and DC 100 V. |
| | 4 | DB2 | | |
| Lower | 1 | L1 | Main power supply input terminal | 3-phase 380Y/220-480Y/277 V, -15%～+10%, 50/60 Hz<br>TN (ground the neutral point to earth) |
| | 2 | L2 | | |
| | 3 | L3 | | |
| | 4 | P | Regenerative resistor connection terminal | ● When using an external regenerative resistor (customer-supplied), connect the external regenerative resistor between P and B.<br>In addition, parameters must be used for regenerative resistor settings.<br>For details, refer to “Technical Reference - Functional Specification”.<br>● Do not connect anything to the N terminal. |
| | 5 | B | | |
| | 6 | N | | |
| | 7 | U | Motor connection terminal | ● Connect each phase of the motor winding.<br>U: U phase, V: V phase, W: W phase |
| | 8 | V | | |
| | 9 | W | | |
| | ⏚ | ⏚ | Ground terminal | ● Connect with the motor E terminal to ground to earth. |

* Tighten the M6 grounding screw to a torque of 2.4–2.6 N·m.
* Tighten the M4 terminal block (upper: control power supply, dynamic brake) screw to a torque of 0.7–1.0 N·m. Exceeding the maximum tightening torque may damage the terminal block.
* Tighten the M6 terminal block (lower: main power supply, regenerative resistor, motor) screw to a torque of 2.2–2.5 N·m. Exceeding the maximum tightening torque may damage the terminal block.
* Tighten the M3 screw for securing terminal block cover 1 (transparent) to a torque of 0.19–0.21 N·m.
* Tighten the M5 screw for securing terminal block cover 2 (black) to a torque of 2.0–2.5 N·m.

## 7.2 USB Connector X1

By connecting to computer or NC controller via the USB interface, it is possible to set/change parameters, monitor control status, view error status/history, save/load parameters, etc.

| Name | Symbol | Pin No. | Description |
|---|---|---|---|
| USB signal connector | VBUS | 1 | ● Used for communication with computers or NC controllers. |
| | D- | 2 | |
| | D+ | 3 | |
| For manufacturer use | — | 4 | ● Do not connect anything |
| Signal ground | GND | 5 | ● Signal ground |

The connector type on the servo driver side is USB mini-B.

## 7.3 RTEX Connector X2A, X2B

This is an RJ45 connector for use with RTEX.

[X2A] RX connector

| Name | Symbol | Pin No. | Description |
|---|---|---|---|
| Not used | — | 1 | ● Connect to pin 1 of the TX connector of the transmitting node |
| Not used | — | 2 | ● Connect to pin 2 of the TX connector of the transmitting node |
| Network input + | RX+ | 3 | ● Connect to pin 3 of the TX connector of the transmitting node |
| Not used | — | 4 | ● Connect to pin 4 of the TX connector of the transmitting node |
| Not used | — | 5 | ● Connect to pin 5 of the TX connector of the transmitting node |
| Network input - | RX- | 6 | ● Connect to pin 6 of the TX connector of the transmitting node |
| Not used | — | 7 | ● Connect to pin 7 of the TX connector of the transmitting node |
| Not used | — | 8 | ● Connect to pin 8 of the TX connector of the transmitting node |
| Frame ground | FG | Shell | ● Connect to the cable shield |

[X2B] TX connector

| Name | Symbol | Pin No. | Description |
|---|---|---|---|
| Not used | — | 1 | ● Connect to pin 1 of the RX connector of the receiving node |
| Not used | — | 2 | ● Connect to pin 2 of the RX connector of the receiving node |
| Network output + | TX+ | 3 | ● Connect to pin 3 of the RX connector of the receiving node |
| Not used | — | 4 | ● Connect to pin 4 of the RX connector of the receiving node |
| Not used | — | 5 | ● Connect to pin 5 of the RX connector of the receiving node |
| Network output - | TX- | 6 | ● Connect to pin 6 of the RX connector of the receiving node |
| Not used | — | 7 | ● Connect to pin 7 of the RX connector of the receiving node |
| Not used | — | 8 | ● Connect to pin 8 of the RX connector of the receiving node |
| Frame ground | FG | Shell | ● Connect to the cable shield |

● Make sure to use shielded twisted pair (STP) cables of Category 5e or higher in the TIA/EIA-568 standard.

## 7.4 Safety Function Connector X3

This is a connector for functional safety.

This connector is only compatible with the multifunction type.

| Name | Symbol | Pin No. | Description | I/O signal interface |
|---|---|---|---|---|
| Reserved | — | 1 | ● Do not connect anything | — |
| | — | 2 | | — |
| Safety input 1 | SF1- | 3 | ● Two independent circuits turn off the drive signal to the power module and cut off the motor current. | i-1 |
| | SF1+ | 4 | | |
| Safety input 2 | SF2- | 5 | | |
| | SF2+ | 6 | | |
| EDM output | EDM- | 7 | ● Monitor output for monitoring safety function faults. | o-1 |
| | EDM+ | 8 | | |
| Frame ground | FG | Shell | ● Connected to the ground terminal inside the servo driver. | — |

In order to set the safety levels to SIL 3, PL e, DCavg Medium, diagnosis via EDM output is required (max. 3-month diagnostic interval).

Safety levels are SIL 2, PL d, DCavg Low when diagnosis by EDM output is not performed.

## 7.5 Parallel I/O connector X4

### 7.5.1 Input signal

| Name | Symbol | Pin No. | Description | I/O signal interface |
|---|---|---|---|---|
| General input common | SI-COM | 6 | ● Connect the positive or negative poles of the external DC power supply (12–24 V).<br>● Use a power supply of 12 V±5% – 24 V±5%.<br>● This must be isolated from the primary power supply. Do not connect it to the same power supply.<br>Primary power supply: Power supply for motor brake | – |
| General input 1 | SI1 | 5 | ● Functions are assigned using parameters.<br>For details, refer to “Technical Reference - Functional Specification”.<br>● Be aware that there are restrictions on the assignment of functions.<br>For example, in the case of external latch inputs, EXT1 can only be assigned to SI5, EXT2 to SI6, and EXT3 to SI7. | i-1 |
| General input 2 | SI2 | 7 | | |
| General input 3 | SI3 | 8 | | |
| General input 4 | SI4 | 9 | | |
| General input 5 | SI5 | 10 | | |
| General input 6 | SI6 | 11 | | |
| General input 7 | SI7 | 12 | | |
| General input 8 | SI8 | 13 | | |

### 7.5.2 Output signal

| Name | Symbol | Pin No. | Description | I/O signal interface |
|---|---|---|---|---|
| General output 1 | SO1+<br>SO1- | 1<br>2 | ● Functions are assigned using parameters.<br>For details, refer to “Technical Reference - Functional Specification”. | o-1 |
| General output 2 | SO2+<br>SO2- | 25<br>26 | | |
| General output 4 | SO3+<br>SO3- | 3<br>4 | | |

### 7.5.3 feedback output signal/position compare output signal

| Name | Symbol | Pin No. | Description | I/O signal interface |
|---|---|---|---|---|
| A-phase output/ position compare output 1 | OA+/ OCMP1+ | 17 | ● Differential output of divided feedback scale signal (A/B phase). (RS422 compatible)<br>● The division ratio can be set by the parameters.<br>● The ground of the line driver for the output circuit is connected to the signal ground (GND), and kept non-insulated.<br>● Maximum output frequency is 4 Mpps (after being multiplied by 4).<br>● It can be used as position compare output by setting parameters. For details, refer to "Technical Reference - Functional Specification".<br>● This differential signal should be received by a line receiver (AM26C32 or equivalent), and a terminating resistor (approx. 330 Ω) should be connected between the line receiver inputs.<br>● Use shielded twisted-pair cables for wiring, and connect the shielded wires to the connector shell. | Do-1 |
| | OA-/ OCMP1- | 18 | | |
| B-phase output/ position compare output 2 | OB+/ OCMP2+ | 20 | | |
| | OB-/ OCMP2- | 19 | | |
| Position compare output 3 | OCMP3+ | 21 | | |
| | OCMP3- | 22 | | |
| Signal ground | GND | 16 | ● Signal ground.<br>● Always connect the line receiver ground to this terminal. | — |

### 7.5.4 Other

| Name | Symbol | Pin No. | Description | I/O signal interface |
|---|---|---|---|---|
| Reserved | — | 14<br>15<br>23<br>24 | ● Do not connect anything. | — |
| Frame ground | FG | Shell | ● Connected to the ground terminal inside the servo driver. | — |

## 7.6 Feedback scale connector X5

| Name | Symbol | Pin No. | Description |
|---|---|---|---|
| Power supply output for feedback scale | EX5V | 1 | ● Feedback scale power supply output (*1) (*2) |
| | EX0V | 2 | ● Ground for feedback scale power supply output (*3) |
| Feedback scale signal input/output (serial signal) | EXPS | 3 | ● Serial signal non-inverted I/O |
| | /EXPS | 4 | ● Serial signal inverted I/O |
| Feedback scale signal input (A-/B-/Z-phase signal) (*4) | EXA | 5 | ● A-phase signal non-inverted input |
| | /EXA | 6 | ● A-phase signal inverted input |
| | EXB | 7 | ● B-phase signal non-inverted input |
| | /EXB | 8 | ● B-phase signal inverted input |
| | EXZ | 9 | ● Z-phase signal non-inverted input |
| | /EXZ | 10 | ● Z-phase signal inverted input |
| Frame ground | FG | Shell | ● Connected to the ground terminal inside the servo driver. |

*1 The EX5V is connected to the X6 connector pin 1 (E5V) inside the servo driver.

The EX5V and the X6 E5V are 5 V ± 5% with a total maximum of 300 mA.

A customer-supplied external power supply is necessary if using a feedback scale with a consumption current higher than this.

Also, some feedback scales may take time to initialize when powering on. In that case, it is possible to adjust the power-on wait time, which is a function of the servo driver.

For details, refer to Technical Reference - Functional Specification -.

*2 If the feedback scale is powered by an external power supply, the EX5V pin should be open to prevent external voltage from being supplied to this pin.

*3 The EX0V of the feedback scale power supply output is connected to the control circuit ground connected to the connector X4 and pin 2 of X6 (E0V).

*4 Up to 4 Mpps can be received with A/B phase multiplied by 4. However, if the duty ratio of the scale input signal waveform is not 50%, it may not be able to read correctly.

## 7.7 CS Signal Connector X6

| Name | Symbol | Pin No. | Description |
|---|---|---|---|
| Power supply output for CS signal | E5V | 1 | ● Power supply output for CS signals (*1) |
| | E0V | 2 | ● Ground for CS signal power supply output (*2) |
| Reserved | — | 3 | ● Do not connect anything. |
| CS signal input | CS3 | 4 | ● CS3 signal input |
| | CS2 | 5 | ● CS2 signal input |
| | CS1 | 6 | ● CS1 signal input |
| Frame ground | FG | Shell | ● Connected to the ground terminal inside the servo driver. |

*1 The E5V is connected to the X5 connector pin 1 (EX5V) inside the servo driver.

The E5V and the X5 EX5V are 5 V ± 5% with a total maximum of 300 mA.

*2 The E0V of the CS signal power supply output is connected to pin 2 (EX0V) of connector X5 and to the control circuit ground connected to connector X4.

## 7.8 Analog Monitor Connector X7

| Name | Symbol | Pin No. | Description | I/O signal interface |
|---|---|---|---|---|
| Analog monitor output 1 | AM1 | 1 | ● Outputs analog signals for the monitor.<br>● The meaning of the output signal changes depending on parameter settings. | Ao-1 |
| Analog monitor output 2 | AM2 | 2 | | |
| Signal ground | GND | 3 | ● Signal ground | — |
| Reserved | — | 4,5 | ● Do not connect anything | — |

## 7.9 I/O Signal Interface

**i-1**

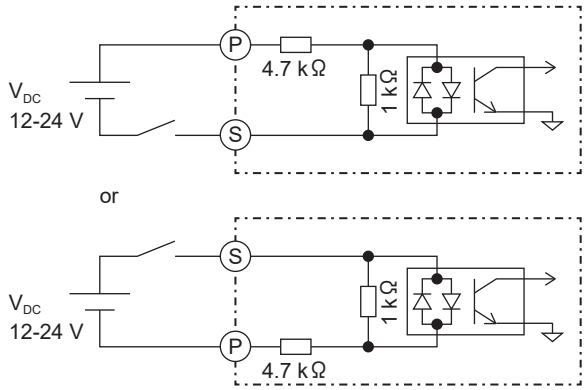


S: [Pins] (X3) 3, 5 / (X4) 5, 7, 8, 9, 10, 11, 12, 13
P: [Pins] (X3) 4, 6 / (X4) 6

**o-1**

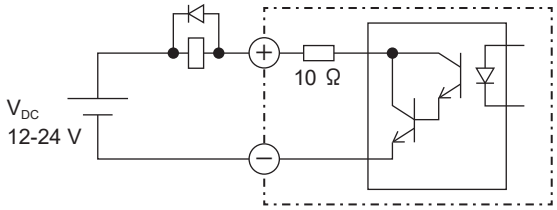


[Pins] ＋: (X3) 8 / (X4) 1, 3, 25
[Pins] －: (X3) 7 / (X4) 2, 4, 26

* If the relay is to be driven directly, install a diode in parallel with the relay in the direction shown above.

**Ao-1**

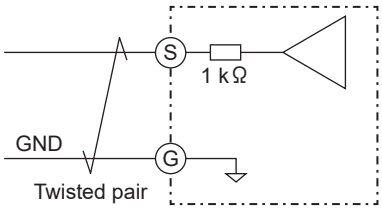


[Pins] S: (X7) 1, 2
[Pins] G: (X7) 3

* The output signal amplitude is ±10 V.

**Do-1**

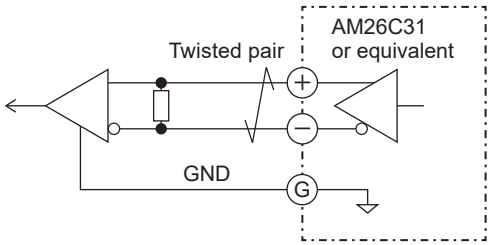


[Pins] ＋: (X4) 17,20,21
[Pins] －: (X4) 18,19,22
[Pins] G : (X4) 16

* Connect a terminating resistor (approx. 330 Ω) between the line receiver inputs.

### 7.9.1 CS Signal Interface

The linear motor CS signal is connected to X6.

The relationship between the CS signal and the movement direction of the linear motor is shown in the figure below.

■ **when not using CS signal part twisted-pair cable**

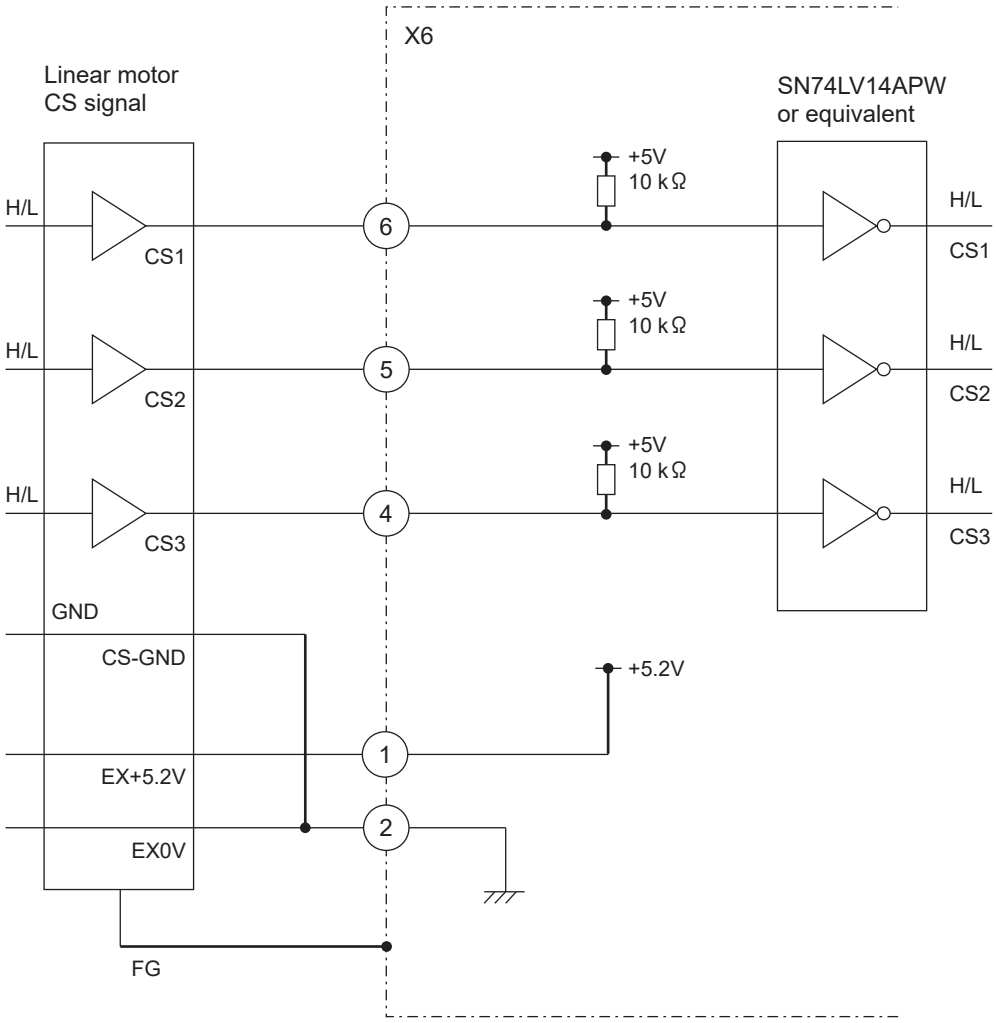

■ **when using CS signal part twisted-pair cable**

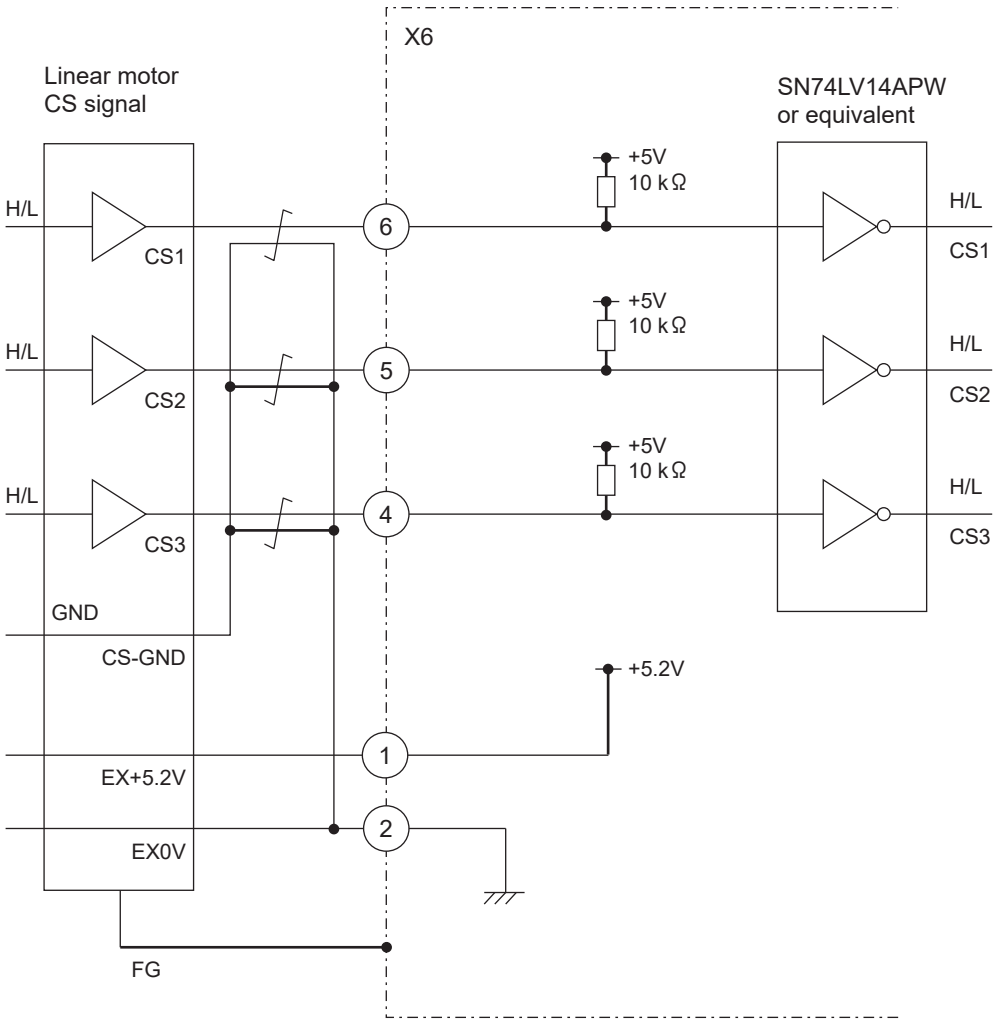


**CS signal direction**

| | Negative Direction (Counting Down) | Positive Direction (Counting Up) |
|---|---|---|
| Magnetic pole detection signal | 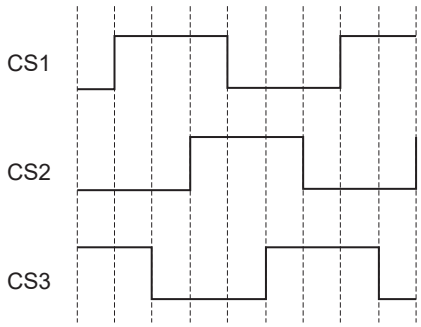  CS1 advances 120° from CS2<br>CS2 advances 120° from CS3 | 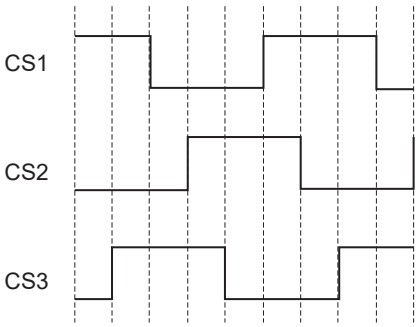  CS3 advances 120° from CS2<br>CS2 advances 120° from CS1 |

# 8 Wiring and System Configuration

## 8.1 Cables Used and Maximum Cable Lengths

| Name | Symbol | Maximum wiring length (*1) | Cable(s) used |
|---|---|---|---|
| Main power supply input | L1, L2, L3 | — | See *"15 Model Specifications"* |
| Control power supply input | L1C, L2C (100 V / 200 V) | — | See *"15 Model Specifications"* |
| | 24V, 0V (400 V) | — | See *"15 Model Specifications"* |
| Motor output | U, V, W, ⏚ | 20 m | See *"15 Model Specifications"* |
| Ground cable | ⏚ | — | See *"15 Model Specifications"* |
| CS signal connection | X6 | 20 m | Common shielded twisted-pair wire Core cable: 0.18 $mm^2$ or more |
| Feedback scale connection (*3) | X5 | 20 m | |
| Parallel I/O connection | X4 | 3 m | |
| Safety connection (*3) | X3 | 3 m | Core cable: 0.18 $mm^2$ or more |
| RTEX connection | X2A, X2B | 100 m (*2) | TIA/EIA-568 CAT5e STP |

*1 The above wiring lengths are the maximum lengths used in Panasonic's evaluation environment. They do not guarantee operation in working environments of customers.

*2 For details, refer to *"8.3.4 Wiring to Connectors X2A, X2B"*

*3 Only compatible with the multifunction type.

## 8.2 Cable Side Connectors

| Connector symbol | Product Name | Product number | Manufacturer |
|---|---|---|---|
| X3 | Connector | 2013595-1 | TE Connectivity |
| X4 | Solder plug (soldered type) | DF02P026F22A1 | Japan Aviation Electronics Industryry, Ltd. (JAE) |
| | Plug hood | DF02D026B22A | |
| X5 | Connector | MUF-PK10K-X | J.S.T. Mfg. Co., Ltd. |
| X6 | Receptacle | 3E206-0100 KV | 3M Japan |
| | Shell kit | 3E306-3200-008 | |
| X7 | Connector | 510210500 | Molex Japan |
| | Terminal | 500588020 | |
| XE (*1) | Connector | 5557-04R-210 | Molex Japan |
| | Terminal | 5556PBTL | |

*1 Only size G is supported.

* Use the connectors above or an equivalent.

## 8.3 Precautions for Wiring

### 8.3.1 Wiring to Power Connectors and Terminal Blocks

#### 8.3.1.1 Size A, B 100 V/200 V

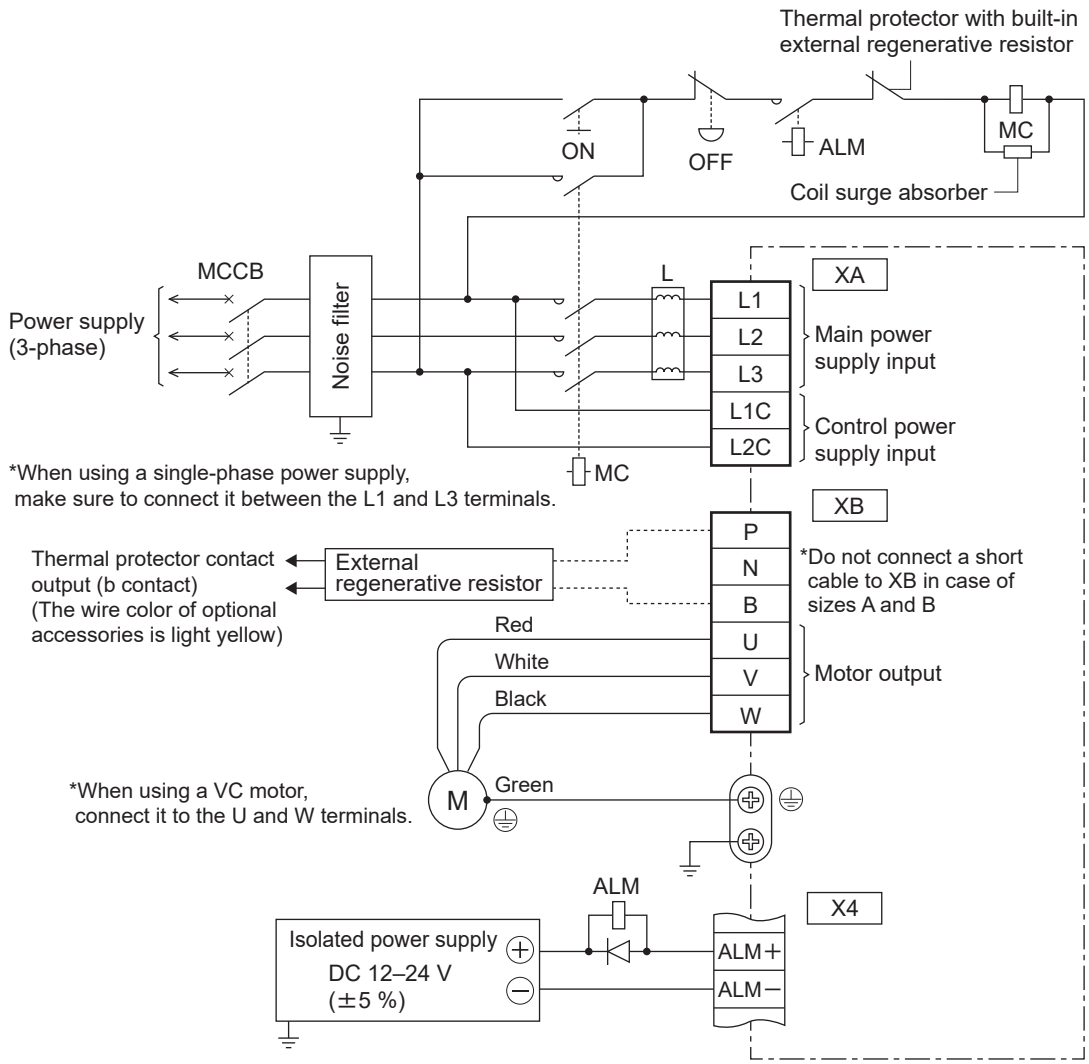


Regenerative resistor connection

| Size | Short cable (accessory) | Built-in regenerative resistor | Connection of connector XB | |
|---|---|---|---|---|
| | | | When using an external regenerative resistor | When not using an external regenerative resistor |
| Size A Side B | None | None | Between P and B: Connect the external regenerative resistor. | Between P and B: Keep open. |

* Connectors X1–X7 are secondary-side circuits. (See *"5 Appearance and Part Names"* )

The primary-side power supply (power supply for the motor brake) must be isolated.

Do not connect it to the same power supply.

* For details, refer to the table in *"7.1.1 Size A, B 100 V/200 V"* .

### 8.3.1.2 Size C, D 100 V/200 V

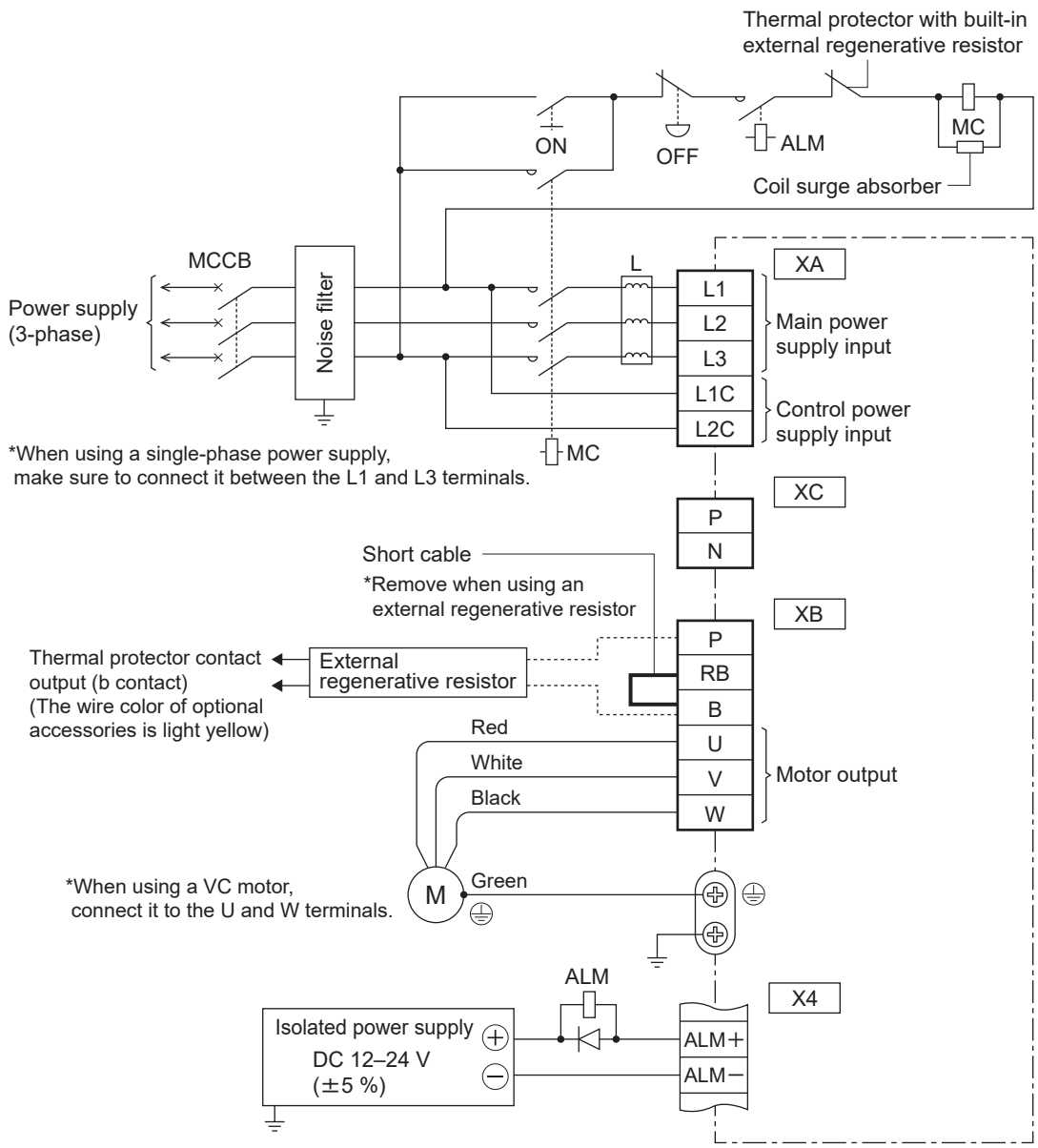


Regenerative resistor connection

| Size | Short cable (accessory) | Built-in regenerative resistor | Connection of connector XB | |
|---|---|---|---|---|
| | | | When using an external regenerative resistor | When not using an external regenerative resistor |
| Size C<br>Side D | Provided | Provided | Between the RB and B: Disconnect the short cable.<br>Between P and B: Connect the external regenerative resistor. | Between RB and B: Short circuit with the short cable. |

* Connectors X1–X7 are secondary-side circuits. (See *"5 Appearance and Part Names"* )

The primary-side power supply (power supply for the motor brake) must be isolated.

Do not connect it to the same power supply.

* For details, refer to the table in *"7.1.2 Size C, D 100 V/200 V"* .

### 8.3.1.3 Size E 200 V

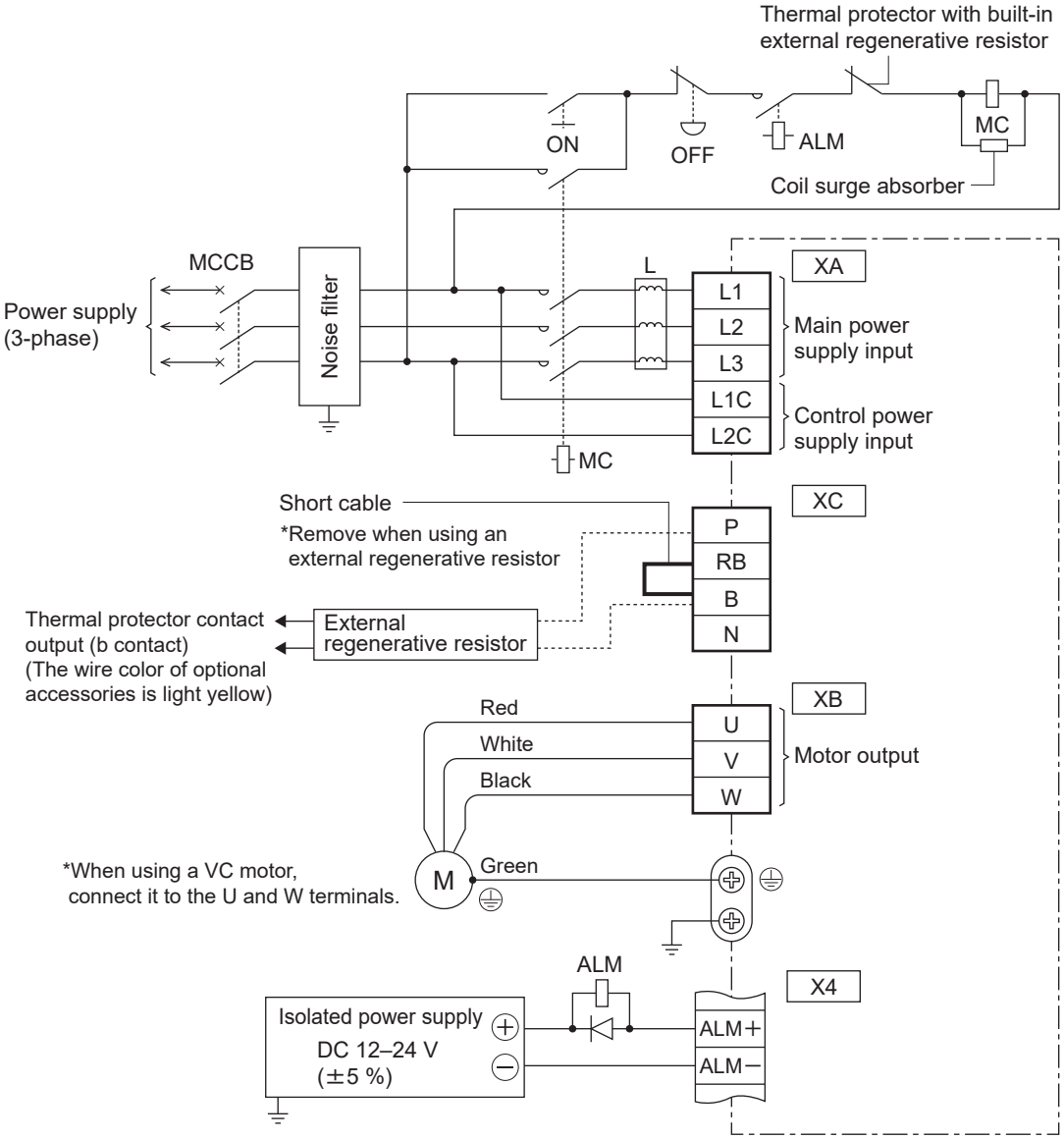


Regenerative resistor connection

| Size | Short cable (accessory) | Built-in regenerative resistor | Connection of connector XC | |
|---|---|---|---|---|
| | | | When using an external regenerative resistor | When not using an external regenerative resistor |
| Side E | Provided | Provided | Between the RB and B: Disconnect the short cable.<br>Between P and B: Connect the external regenerative resistor. | Between RB and B: Short circuit with the short cable. |

* Connectors X1–X7 are secondary-side circuits. (See *"5 Appearance and Part Names"* )

The primary-side power supply (power supply for the motor brake) must be isolated.

Do not connect it to the same power supply.

* For details, refer to the table in *"7.1.3 Size E 200 V"* .

### 8.3.1.4 Size F 200 V

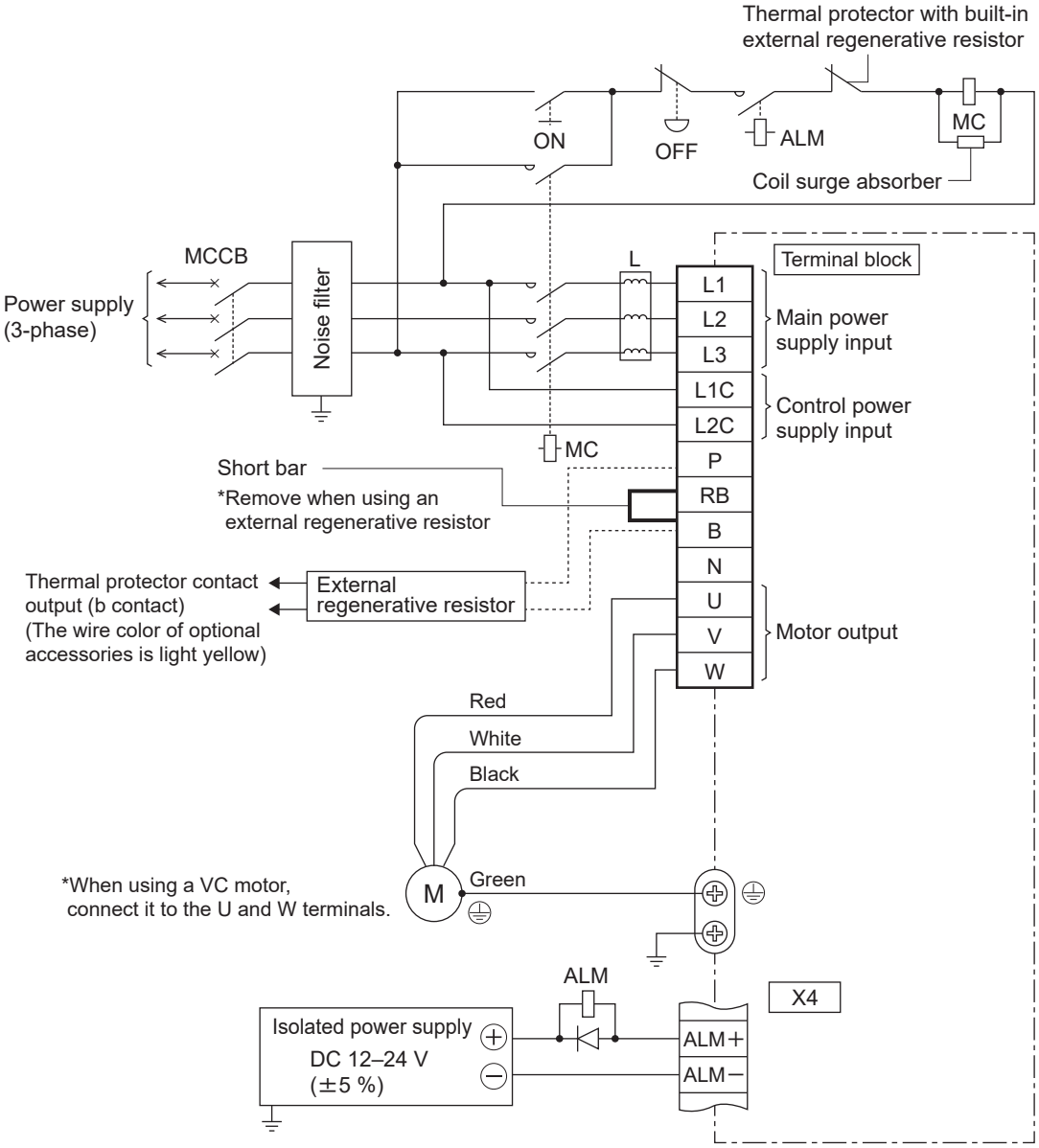


Regenerative resistor connection

| Size | Short bar (accessory) | Built-in regenerative resistor | Terminal block connection | |
|---|---|---|---|---|
| | | | When using an external regenerative resistor | When not using an external regenerative resistor |
| Side F | Provided | Provided | Between RB and B: Disconnect the short bar.<br>Between P and B: Connect the external regenerative resistor. | Between RB and B: Short circuit with the short bar. |

* Connectors X1–X7 are secondary-side circuits. (See *"5 Appearance and Part Names"* )

The primary-side power supply (power supply for the motor brake) must be isolated.

Do not connect it to the same power supply.

* The capability of the built-in dynamic brake resistor is roughly the maximum allowable inertia when stopped three times consecutively from the rated speed. Failure to do so may cause the resistor to disconnect or the dynamic brake to no longer be operable.

* For details, refer to the table in *"7.1.4 Size F 200 V"* .

### 8.3.1.5 Size G 200 V

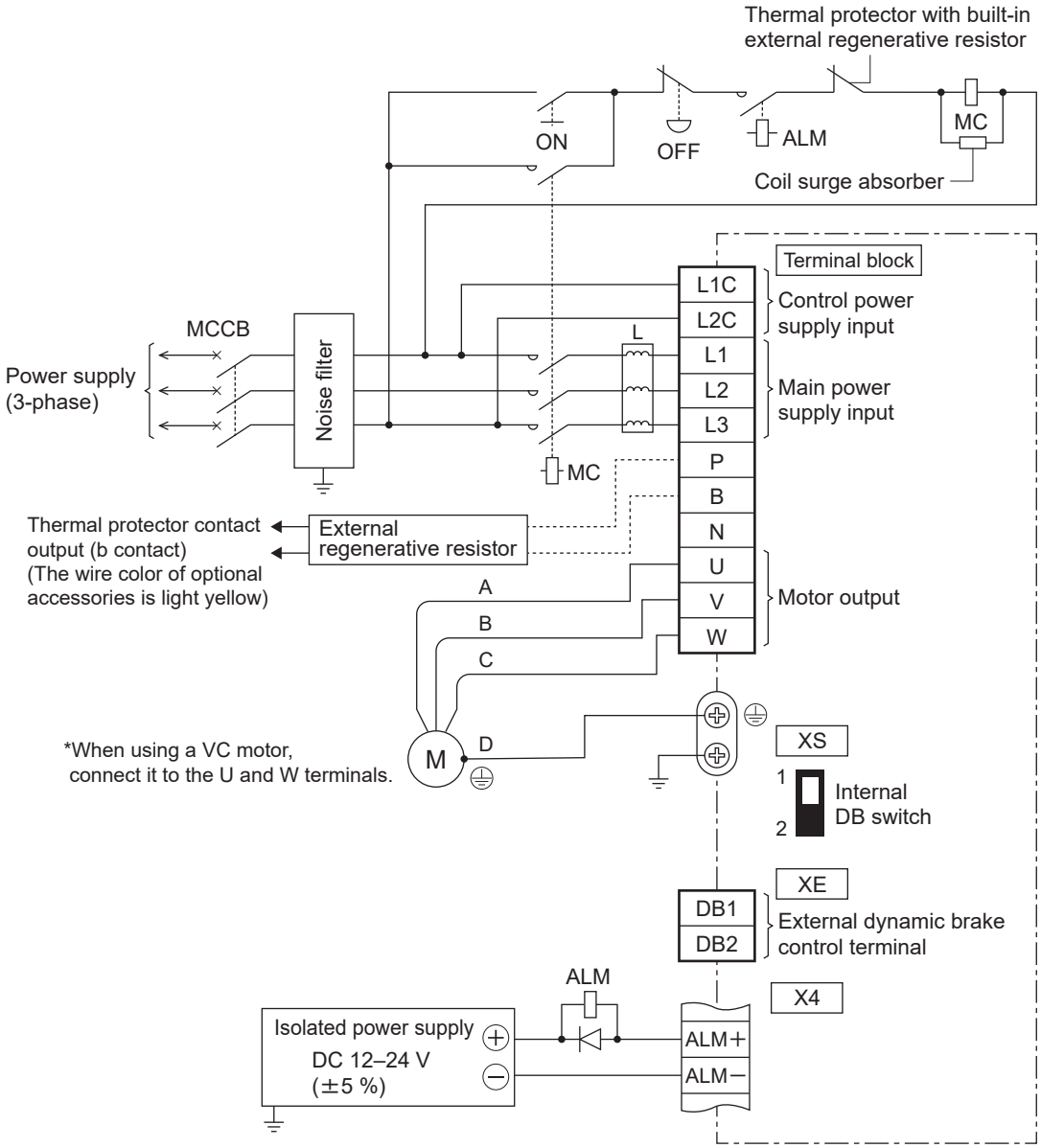


Regenerative resistor connection

| Size | Built-in regenerative resistor | Terminal block connection | |
|---|---|---|---|
| | | When using an external regenerative resistor | When not using an external regenerative resistor |
| Side G | None | Between P and B: Connect the external regenerative resistor. | Between P and B: Keep open. |

* Connectors X1–X7 are secondary-side circuits. (See *"5 Appearance and Part Names"* )

  The primary-side power supply (power supply for the motor brake) must be isolated.

  Do not connect it to the same power supply.

* Size G has a built-in dynamic brake. If using the built-in dynamic brake, set switch XS to "1". (It is set to the "1" side by default.)

* The capability of the built-in dynamic brake resistor is roughly the maximum allowable inertia when stopped three times consecutively from the rated speed. Failure to do so may cause the resistor to disconnect or the dynamic brake to no longer be operable.

* If the capability of the built-in dynamic brake resistor is exceeded, set switch XS to "2" to use the external dynamic brake resistor.

See external dynamic brake connection examples for connections.

* For details, refer to the table in *"7.1.5 Size G 200 V"* .

### Connection example for Size G 200 V external dynamic brake resistor

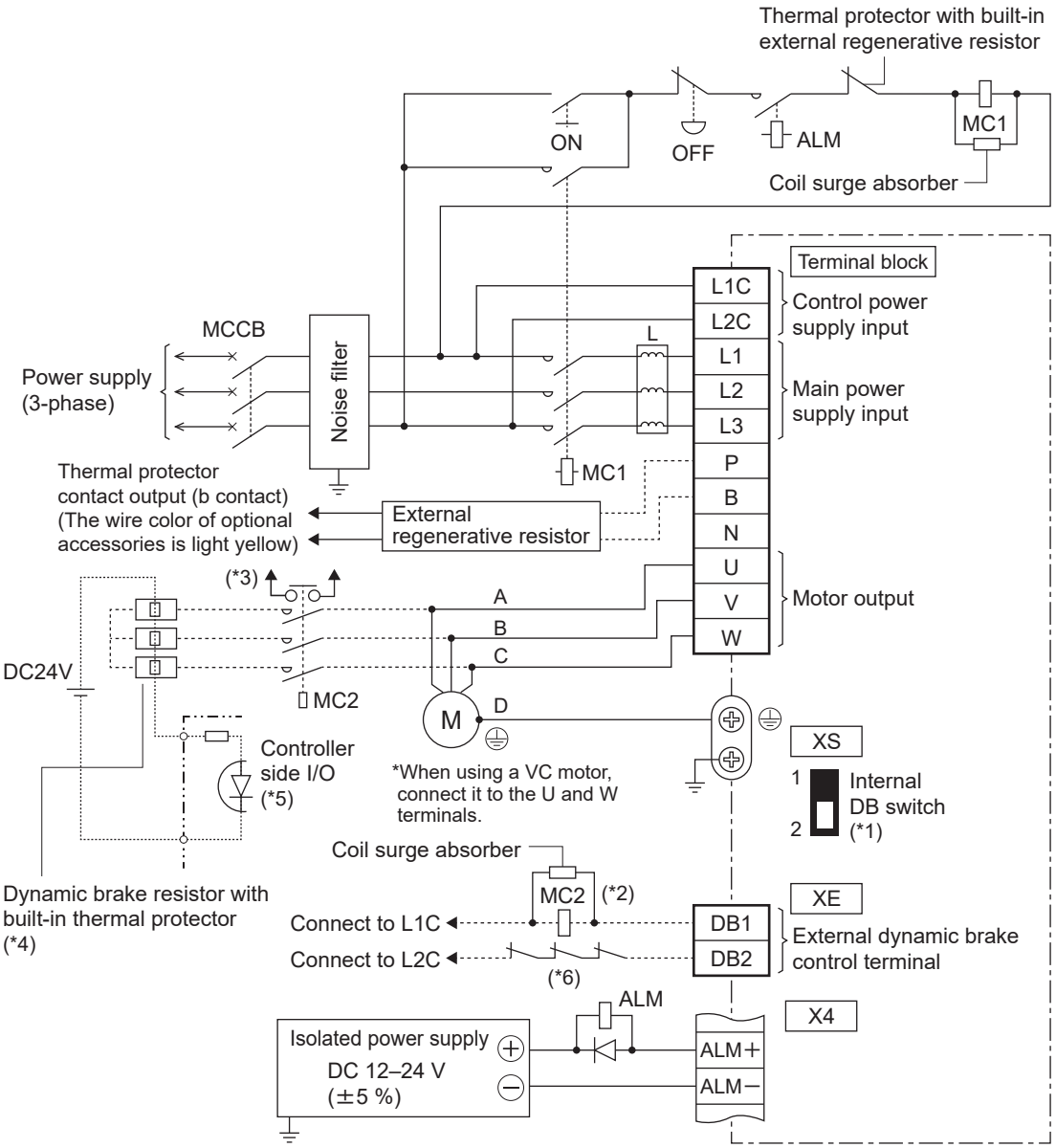


*1 If using the external dynamic brake resistor, set switch XS to "2".

*2 The electromagnetic contactor (MC2) must be the same as the electromagnetic contactor (MC1) of the main circuit.

*3 If an auxiliary contact is established and the main contact is welded together, configure protection so that the servo is not turned on using an external sequence.

*4 Use three dynamic brake resistors of 1.2 Ω 400 W.

Install the dynamic brake resistor to nonflammable materials such as metal.

*5 Install a thermal protector on the dynamic brake resistor and monitor it with the controller side I/O. Configure the protection so that the servo does not turn on in sequence when the thermal protector is operated.

*6 If the thermal protector cannot be monitored by the controller side I/O, input the thermal protector output between L2C and DB2 so that the dynamic brake does not operate when temperature protector operates.

*7 Use the external dynamic brake resistor when the capability of the built-in dynamic brake resistor is exceeded.

*8 Do not use the built-in dynamic brake and external dynamic brake at the same time.

*9 For details, refer to the table in *"7.1.5 Size G 200 V"* .

### 8.3.1.6 Size H 200 V

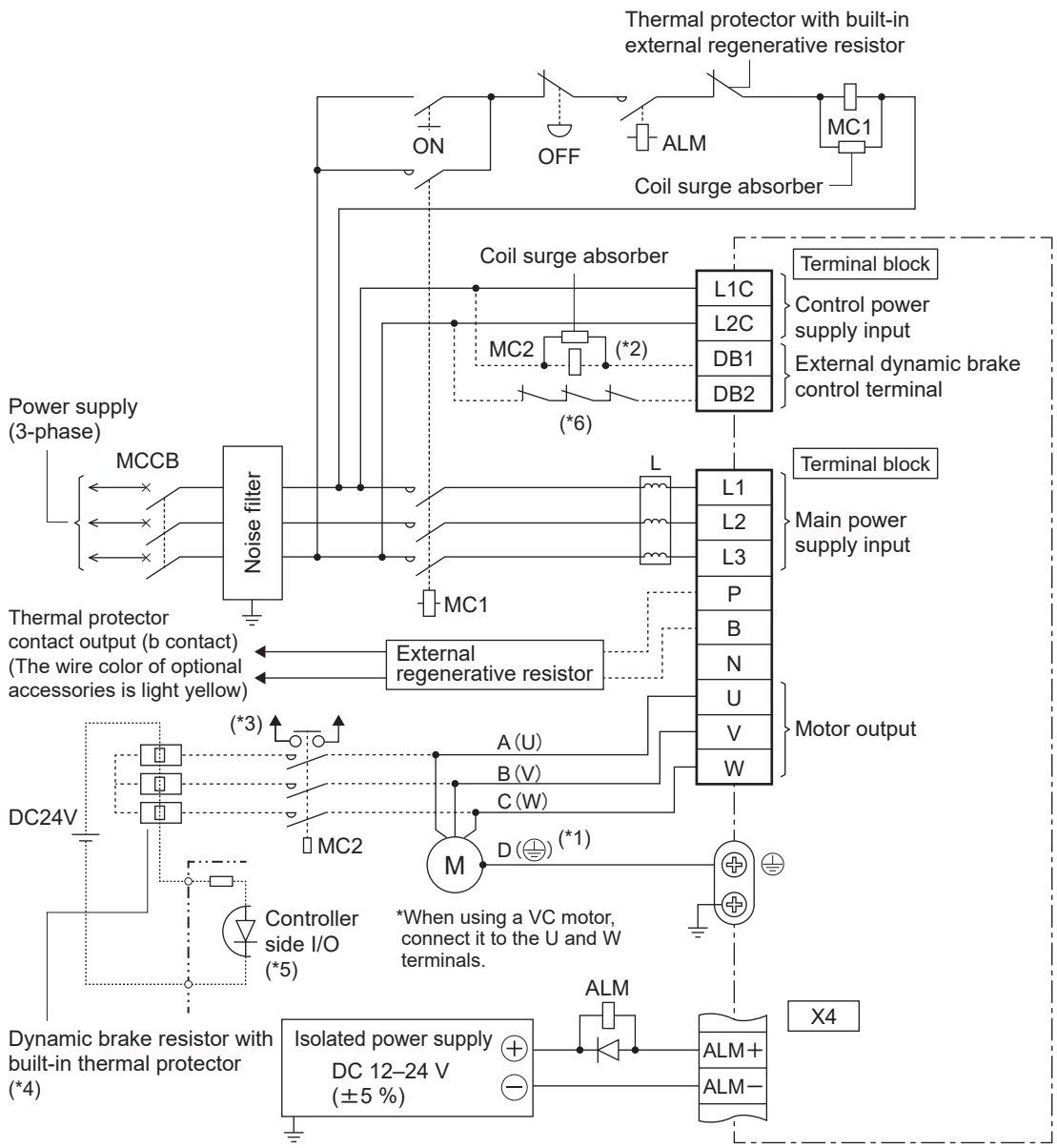


*1 The pin number of the connector on the motor side is listed. Only in the case of the 22-kW specification is the connection destination indicated in parentheses.

*2 The electromagnetic contactor (MC2) must be the same as the electromagnetic contactor (MC1) of the main circuit.

*3 If an auxiliary contact is established and the main contact is welded together, configure protection so that the servo is not turned on using an external sequence.

*4 Use three dynamic brake resistors of 1.2 Ω 400 W.

Install the dynamic brake resistor to nonflammable materials such as metal.

*5 Install a thermal protector on the dynamic brake resistor and monitor it with the controller side I/O. Configure the protection so that the servo does not turn on in sequence when the thermal protector is operated.

*6 If the thermal protector cannot be monitored by the controller side I/O, input the thermal protector output between L2C and DB2 so that the dynamic brake does not operate when temperature protector operates.

*7 For details, refer to the table in *"7.1.6 Size H 200 V"* .

Regenerative resistor connection

| Size | Built-in regenerative resistor | Terminal block connection | |
|---|---|---|---|
| | | When using an external regenerative resistor | When not using an external regenerative resistor |
| Side H | None | Between P and B: Connect the external regenerative resistor. | Between P and B: Keep open. |

* Connectors X1–X7 are secondary-side circuits. (See *"5 Appearance and Part Names"* )

  The primary-side power supply (power supply for the motor brake) must be isolated.

  Do not connect it to the same power supply.

* Because the dynamic brake is not built in, it is in a free-run state when a motor emergency stop occurs.

  Use the external dynamic brake resistor if this could cause a mechanical collision.

* The capability of the external dynamic brake resistor is roughly the maximum allowable inertia when stopped three times consecutively from the rated speed. Failure to do so may cause the resistor to disconnect or the dynamic brake to no longer be operable.

### 8.3.1.7 Size D, E 400 V

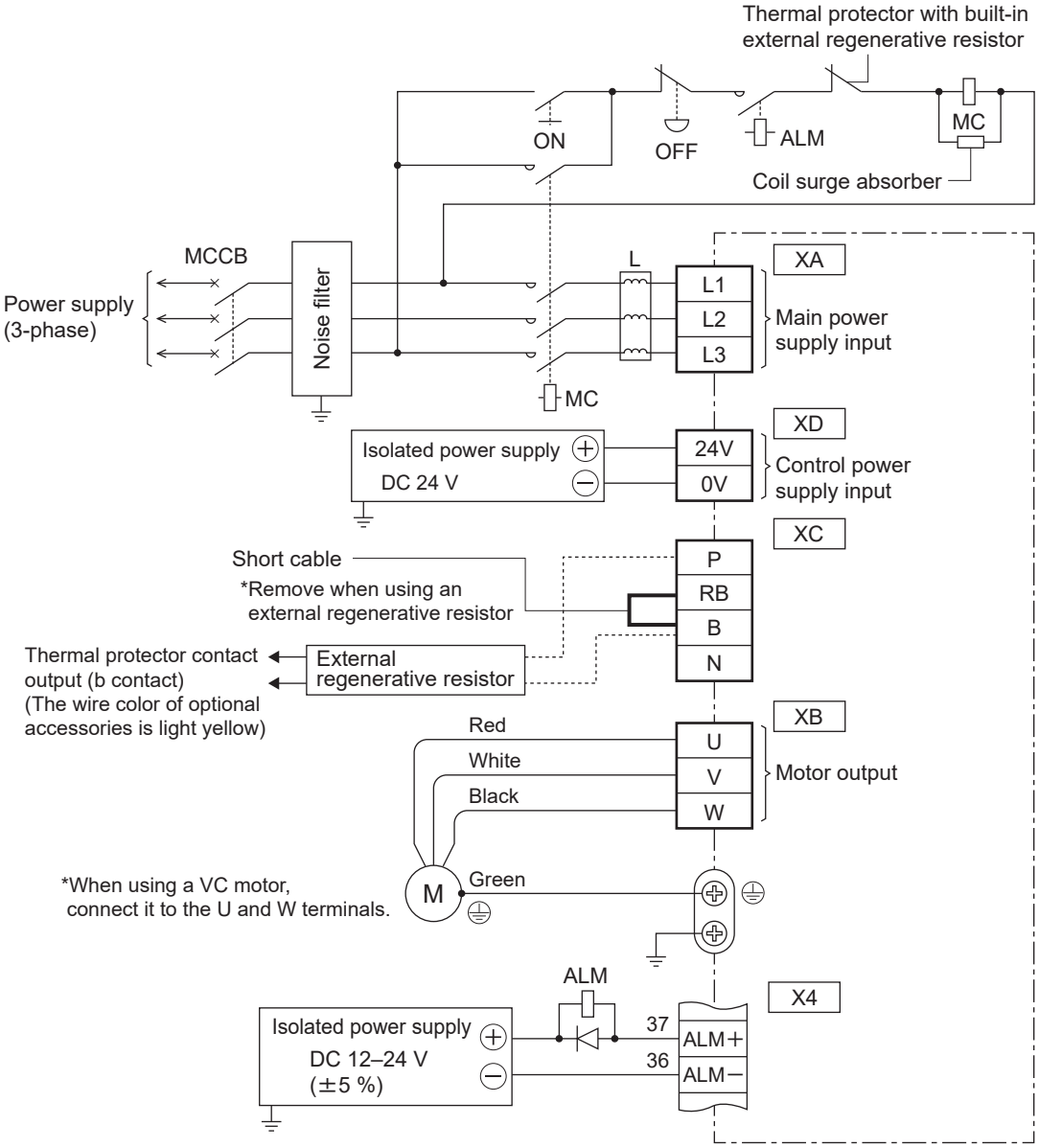


Regenerative resistor connection

| Size | Short cable (accessory) | Built-in regenerative resistor | Connection of connector XC | |
|---|---|---|---|---|
| | | | When using an external regenerative resistor | When not using an external regenerative resistor |
| Size D<br>Size E | Provided | Provided | Between the RB and B: Disconnect the short cable.<br>Between P and B: Connect the external regenerative resistor. | Between RB and B: Short circuit with the short cable. |

* Connectors X1–X7 are secondary-side circuits. (See *"5 Appearance and Part Names"* )

The primary-side power supply (power supply for the motor brake) must be isolated.

Do not connect it to the same power supply.

* For details, refer to the table in *"7.1.7 Size D, E 400 V"* .

### 8.3.1.8 Size F 400 V

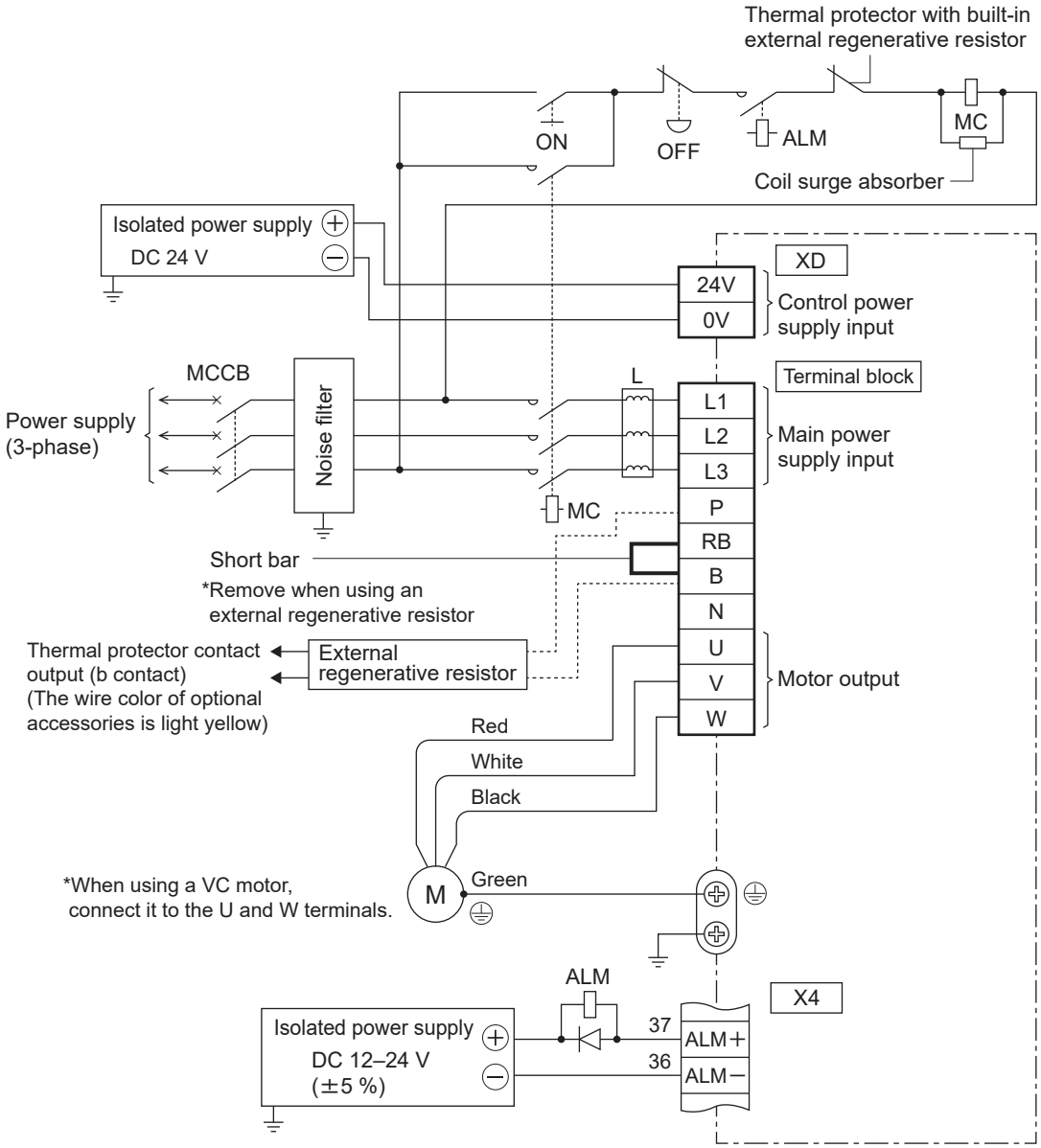


Regenerative resistor connection

| Size | Short bar (accessory) | Built-in regenerative resistor | Terminal block connection | |
|---|---|---|---|---|
| | | | When using an external regenerative resistor | When not using an external regenerative resistor |
| Size F | Provided | Provided | Between RB and B: Disconnect the short bar.<br>Between P and B: Connect the external regenerative resistor. | Between RB and B: Short circuit with the short bar. |

* Connectors X1–X7 are secondary-side circuits. (See *"5 Appearance and Part Names"* )

The primary-side power supply (power supply for the motor brake) must be isolated.

Do not connect it to the same power supply.

* The capability of the built-in dynamic brake resistor is roughly the maximum allowable inertia when stopped three times consecutively from the rated speed. Failure to do so may cause the resistor to disconnect or the dynamic brake to no longer be operable.

* For details, refer to the table in *"7.1.8 Size F 400 V"* .

### 8.3.1.9 Size G 400 V

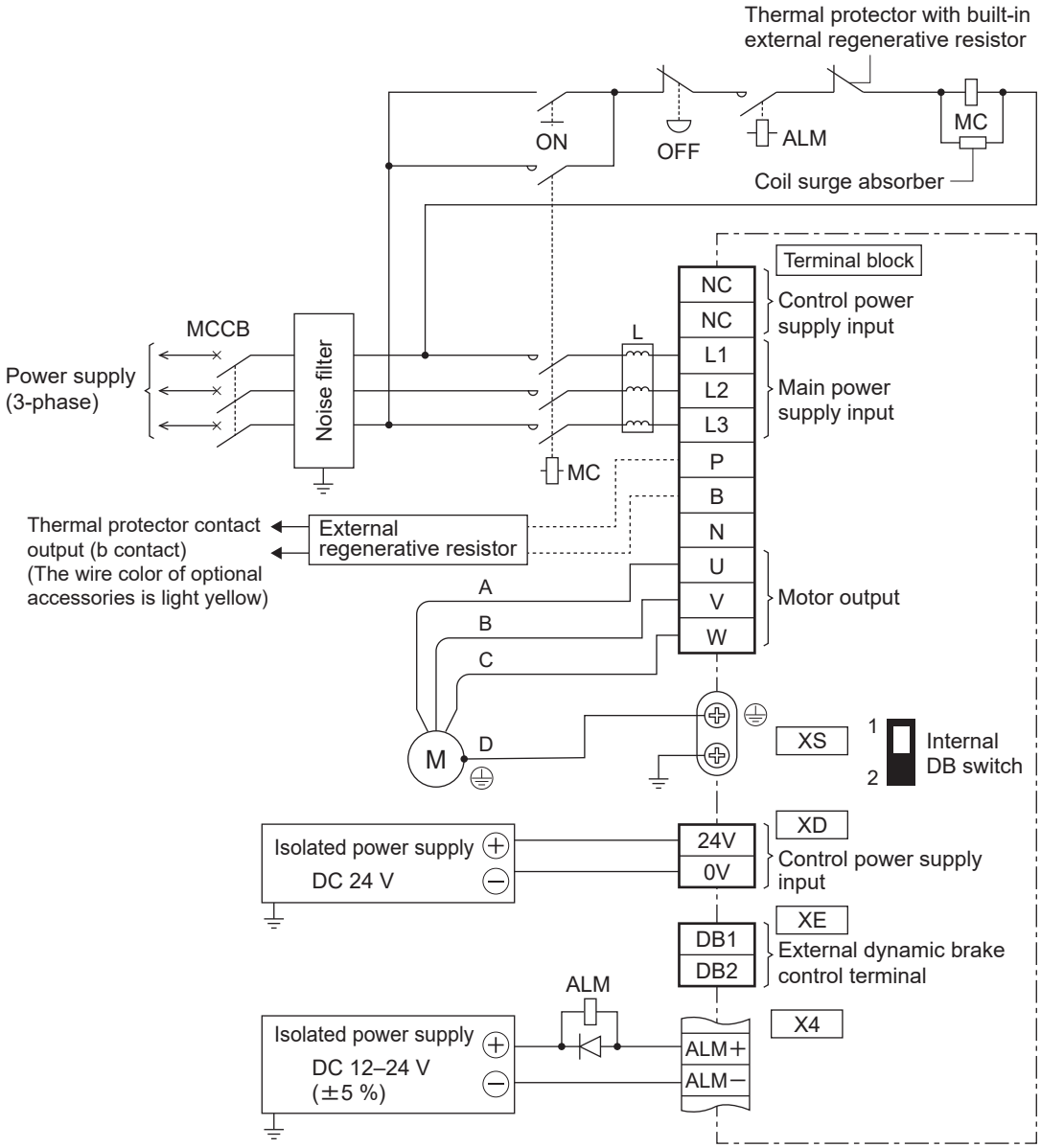


Regenerative resistor connection

| Size | Built-in regenerative resistor | Terminal block connection | |
|---|---|---|---|
| | | When using an external regenerative resistor | When not using an external regenerative resistor |
| Size G | None | Between P and B: Connect the external regenerative resistor. | Between P and B: Keep open. |

* Connectors X1–X7 are secondary-side circuits. (See *"5 Appearance and Part Names"* )

  The primary-side power supply (power supply for the motor brake) must be isolated.

  Do not connect it to the same power supply.

* Size G has a built-in dynamic brake. If using the built-in dynamic brake, set switch XS to "1". (It is set to the "1" side by default.)

* The capability of the built-in dynamic brake resistor is roughly the maximum allowable inertia when stopped three times consecutively from the rated speed. Failure to do so may cause the resistor to disconnect or the dynamic brake to no longer be operable.

* If the capability of the built-in dynamic brake resistor is exceeded, set switch XS to "2" to use the external dynamic brake resistor.

See external dynamic brake connection examples for connections.

* For details, refer to the table in *"7.1.9 Size G 400 V"* .

### Connection example for Size G 400 V external dynamic brake resistor

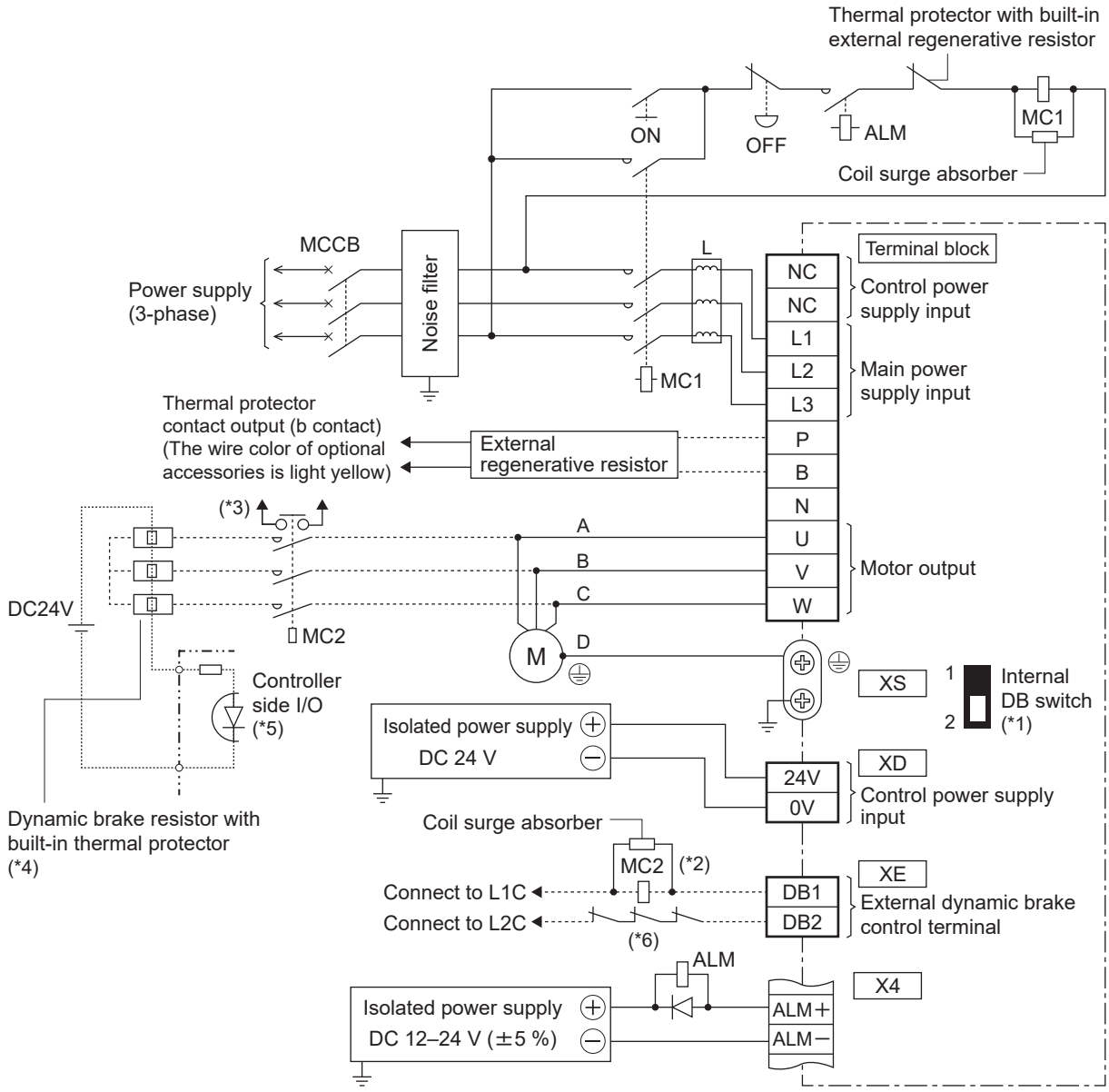


*1 If using the external dynamic brake resistor, set switch XS to "2".

*2 The electromagnetic contactor (MC2) must be the same as the electromagnetic contactor (MC1) of the main circuit.

*3 If an auxiliary contact is established and the main contact is welded together, configure protection so that the servo is not turned on using an external sequence.

*4 Use three dynamic brake resistors of 4.8 Ω 400 W.

Install the dynamic brake resistor to nonflammable materials such as metal.

*5 Install a thermal protector on the dynamic brake resistor and monitor it with the controller side I/O. Configure the protection so that the servo does not turn on in sequence when the thermal protector is operated.

*6 If the thermal protector cannot be monitored by the controller side I/O, input the thermal protector output between L2C and DB2 so that the dynamic brake does not operate when temperature protector operates.

*7 Use the external dynamic brake resistor when the capability of the built-in dynamic brake resistor is exceeded.

*8 Do not use the built-in dynamic brake and external dynamic brake at the same time.

*9 For details, refer to the table in *"7.1.9 Size G 400 V"* .

### 8.3.1.10 Size H 400 V

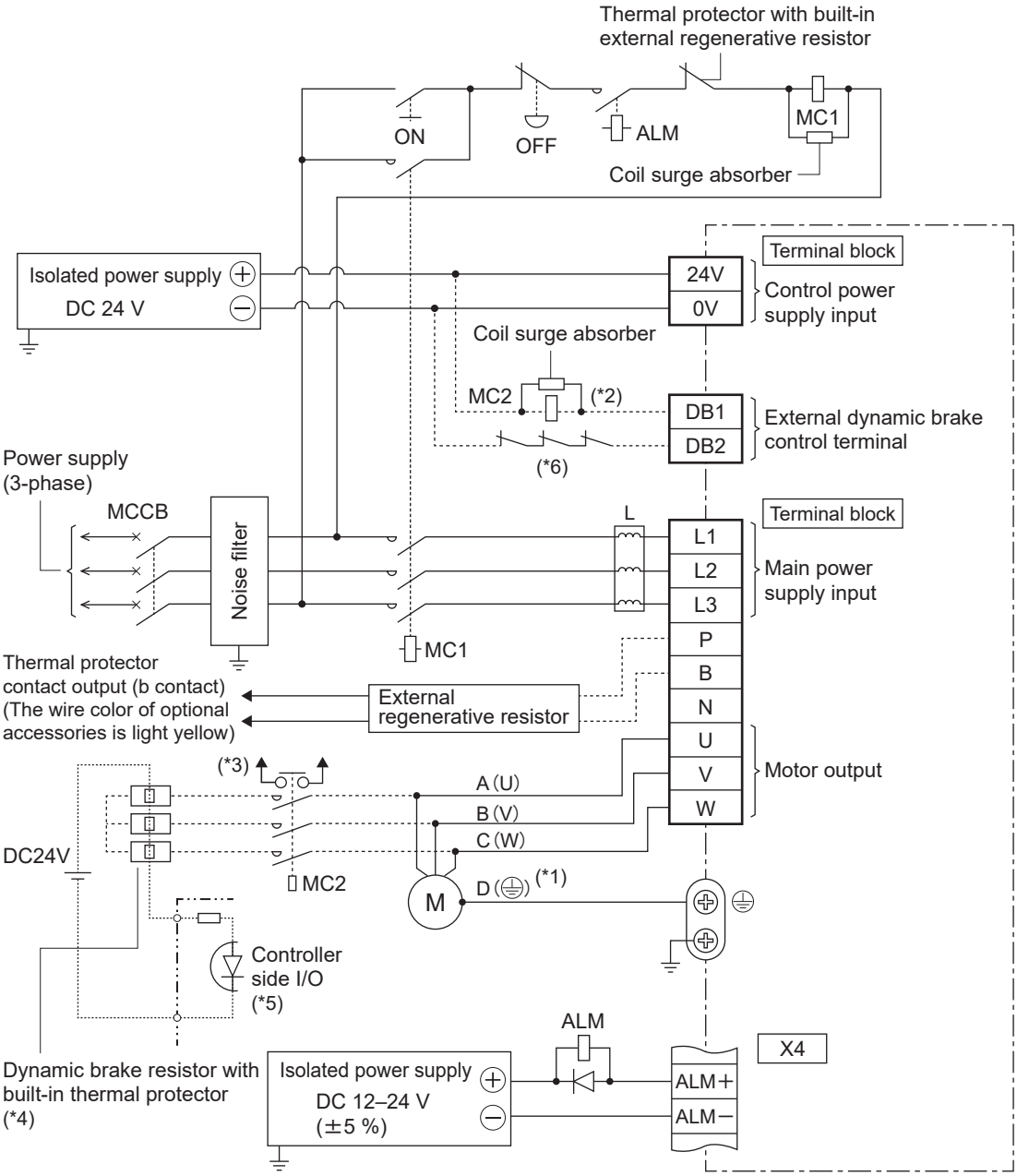


*1 The pin number of the connector on the motor side is listed. Only in the case of the 22-kW specification is the connection destination indicated in parentheses.

*2 The electromagnetic contactor (MC2) must be the same as the electromagnetic contactor (MC1) of the main circuit.

*3 If an auxiliary contact is established and the main contact is welded together, configure protection so that the servo is not turned on using an external sequence.

*4 Use three dynamic brake resistors of 4.8 Ω 400 W.

Install the dynamic brake resistor to nonflammable materials such as metal.

*5 Install a thermal protector on the dynamic brake resistor and monitor it with the controller side I/O. Configure the protection so that the servo does not turn on in sequence when the thermal protector is operated.

*6 If the thermal protector cannot be monitored by the controller side I/O, input the thermal protector output between L2C and DB2 so that the dynamic brake does not operate when temperature protector operates.

*7 For details, refer to the table in *"7.1.10 Size H 400 V"* .

Regenerative resistor connection

| Size | Built-in regenerative resistor | Terminal block connection | |
|---|---|---|---|
| | | When using an external regenerative resistor | When not using an external regenerative resistor |
| Size H | None | Between P and B: Connect the external regenerative resistor. | Between P and B: Keep open. |

* Connectors X1–X7 are secondary-side circuits. (See *"5 Appearance and Part Names"* )

  The primary-side power supply (power supply for the motor brake) must be isolated.

  Do not connect it to the same power supply.

* Because the dynamic brake is not built in, it is in a free-run state when a motor emergency stop occurs.

  Use the external dynamic brake resistor if this could cause a mechanical collision.

* The capability of the external dynamic brake resistor is roughly the maximum allowable inertia when stopped three times consecutively from the rated speed. Failure to do so may cause the resistor to disconnect or the dynamic brake to no longer be operable.

#### 8.3.1.11 Precautions

1 When the servo driver uses a single-phase power supply for sizes A–D, connect the servo driver to main power supply input terminals L1 and L3. Do not connect anything to the terminal L2.

2 Insert the connector securely until it is locked.

3 Make sure to use an insulation coated crimp terminal when connecting to each terminal on the terminal block. (size F,G,H)

4 For models with terminal block covers, the terminal block cover is screwed on.

When wiring to the terminal block, unscrew these screws to open the cover.

Tighten the cover fixing screw to 0.19–0.21 N·m.

Only tighten the terminal block cover 2 (black) of size H to less than 2.0–2.5 N·m of torque.

5 Apply the power supply of the voltage indicated on the nameplate.

6 Do not reverse-connect the power supply input terminals (L1, L2, and L3) and the motor output terminals (U, V, and W).

7 Do not connect the motor output terminals (U, V, and W) to ground or short circuit them.

8 Power connectors XA, XB, XC, XD, and the terminal block are supplied with voltage, so do not touch them. There is a danger of electric shock.

9 The short-circuit current of the power supply used should be capable of not more than 5,000 Arms symmetrical amperes, below the maximum input voltage of the product.

If the short-circuit current of the power supply exceeds this, limit the short-circuit current by using a currentlimiting device (such as a current-limiting fuse, current-limiting breaker, transformer).

10 Make sure to match the motor output terminals (U, V, and W) of the servo driver with the input terminals of the motor.

11 Make sure to connect the grounding terminal of the motor to the grounding terminal of the servo driver and ground it together with the ground terminal of the noise filter. Also ground the machine body. Use a D model ground (grounding resistance: 100 Ω or less). Tighten the servo driver's ground screw with the appropriate torque specified for each size.

Use a ground cable with a wire diameter equal to or larger than the wire diameter specified in “Model Specifications”.

Also, avoid direct contact between aluminum and copper to avoid the effects of electrolytic corrosion.

12 Insert surge absorbing circuits for preventing noise to electromagnetic contactors placed around the servo driver, to coils between relay contact points, and to the brake windings of motors with a brake.

13 Install a molded case circuit breaker (MCCB) and make sure to shut off the power supply from outside the servo driver in case of an emergency.

When using a residual current device, use one with countermeasures for high frequencies.

14 Install a noise filter to reduce terminal noise voltage.

15 The power supply for the brake of motors with a brake must be supplied by the customer.

16 Ensure that voltage is applied to the power supply only after wiring has been completed.

17 Regarding external regenerative resistors:

- Sizes A, B, G and H do not have built-in regenerative resistors.
- Sizes C, D, E, and F have built-in regenerative resistors which are activated by shorting between RB and B.
- If tripping occurs due to a regenerative overload protection error (Err18.0), an external regenerative resistor must be installed. For external regenerative resistors, remove the short cable or short bar between RB and B and connect it between the P and B terminals. In addition, parameters must be used for regenerative resistor settings.

  For details, refer to “Technical Reference - Functional Specification”.

- The following resistors are recommended as external regenerative resistors:

| Size | Input power supply voltage | | |
|---|---|---|---|
| | Single-phase 100 V | Single-phase 200 V/3-phase 200 V | 3-phase 400 V |
| A | DV0P4280 | DV0P4281 (100 W or less)<br>DV0P4283 (200 W) | – |
| B | DV0P4283 | DV0P4283 | |
| C | DV0P4282 | DV0P4283 | |
| D | – | DV0P4284 | DV0PM20048 |
| E | | Two DV0P4284 in parallel<br>or one DV0P4285 | DV0PM20049 |
| F | | Two DV0P4285 in parallel | Two DV0PM20049 in parallel |
| G | – | Three DV0P4285 in parallel | Three DV0PM20049 in parallel |
| H | – | Six DV0P4285 in parallel | Six DV0PM20049 in parallel |

* Manufacturer: Iwaki Musen Kenkyusho

| Panasonic product number | Manufacturer product number | Specifications | | | Built-in thermal protector (*2)<br>Operating temperature |
|---|---|---|---|---|---|
| | | Resistance value | Rated power (reference) (*1) | | |
| | | | Free air | Fan used | |
| | | Ω | [W] | [W] | |
| DV0P4280 | RF70M | 50 | 10 | 25 | 140 ± 5 ℃<br>B contact<br>Open/close capacity (resistive load)<br>1 A, AC 125 V, 6,000 cycles<br>0.5 A, AC 250 V, 10,000 cycles |
| DV0P4281 | RF70M | 100 | 10 | 25 | |
| DV0P4282 | RF180B | 25 | 17 | 50 | |
| DV0P4283 | RF180B | 50 | 17 | 50 | |
| DV0P4284 | RF240 | 30 | 40 | 100 | |
| DV0P4285 | RH450F | 20 | 52 | 130 | |
| DV0PM20048 | RF240TF | 120 | 35 | 80 | |
| DV0PM20049 | RH450FTF | 80 | 65 | 190 | |

*1 Available power without running the built-in thermal protector

*2 Each regenerative resistor has built-in thermal fuse and thermal protector for safety.

- When using a thermal protector, configure the circuit to turn off the power supply.
  (See *"8 Wiring and System Configuration"*)
- The built-in thermal fuse may break due to heat dissipation conditions, operating temperature range, power supply voltage, or load fluctuation.
  When operating in conditions where the regenerative resistor is likely to generate heat (e.g., when the power supply voltage is high, when load inertia is large, when deceleration times are short), incorporate it into the device to ensure that the surface temperature of the regenerative resistor remains at 100°C or less and confirm the operation thereof.
- Install the regenerative resistor to nonflammable materials such as metal.
- Install the regenerative resistor so that it cannot be touched directly, such as by covering it with non-combustible material.
- Sections which can be touched directly should be kept to less than 70°C.

### 8.3.1.12 How to wire to the power connector

Follow the procedure below to wire to connectors XA, XB, XC and XD .

1 Strip the wires to be used. Refer to the figure below for the stripping length.

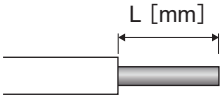


| Size | Connector | L [mm] |
|---|---|---|
| Sizes A - C, Size D 200 V | XA, XB | 10 mm |
| Size D 400 V, Size E | XA, XB, XC | 11 mm |
| Sizes D - F 400 V | XD | 8 mm |

2 Insert the wire into the connector.

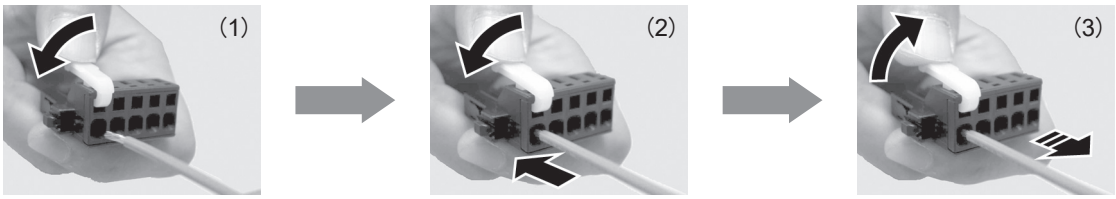


(1) Push down the spring by pushing the control lever attached to the upper operating slot with your fingers.

(2) Insert the wire while pressing the control lever.
* Ensure that all strands are inserted into the spring opening.

(3) Wire it by releasing the control lever. Pull the wire lightly to make sure that the wire is securely connected.

**Precautions**

- Be careful not to damage or cut the core cable when stripping the wire.
- Because the stripping length of the electric wire will depend on the size and type of electric wire, decide the optimal stripping length based on processing conditions.
- When wiring, disconnect the connector from the servo driver main body.
- Insert one wire into one wire insertion slot of the connector.
- Push down the control lever to remove the wire.

### 8.3.2 Wiring to Connector X4

1 The customer is required to prepare provide a DC 12 - 24 V control signal power supply for external control to be connected to SI-COM.

It must be isolated from the primary power supply (motor brake power supply).

Do not connect it to the same power supply.

2 Install peripheral devices as close to the servo driver as possible to minimize the wiring length (within 3 m).

3 Keep the cables as far away from the wiring of the power lines (L1, L2, L3, L1C, L2C, U, V, W, ⏚) as possible (at least 30 cm). Do not put them in the same duct or bind them together.

#### 8.3.2.1 Control input

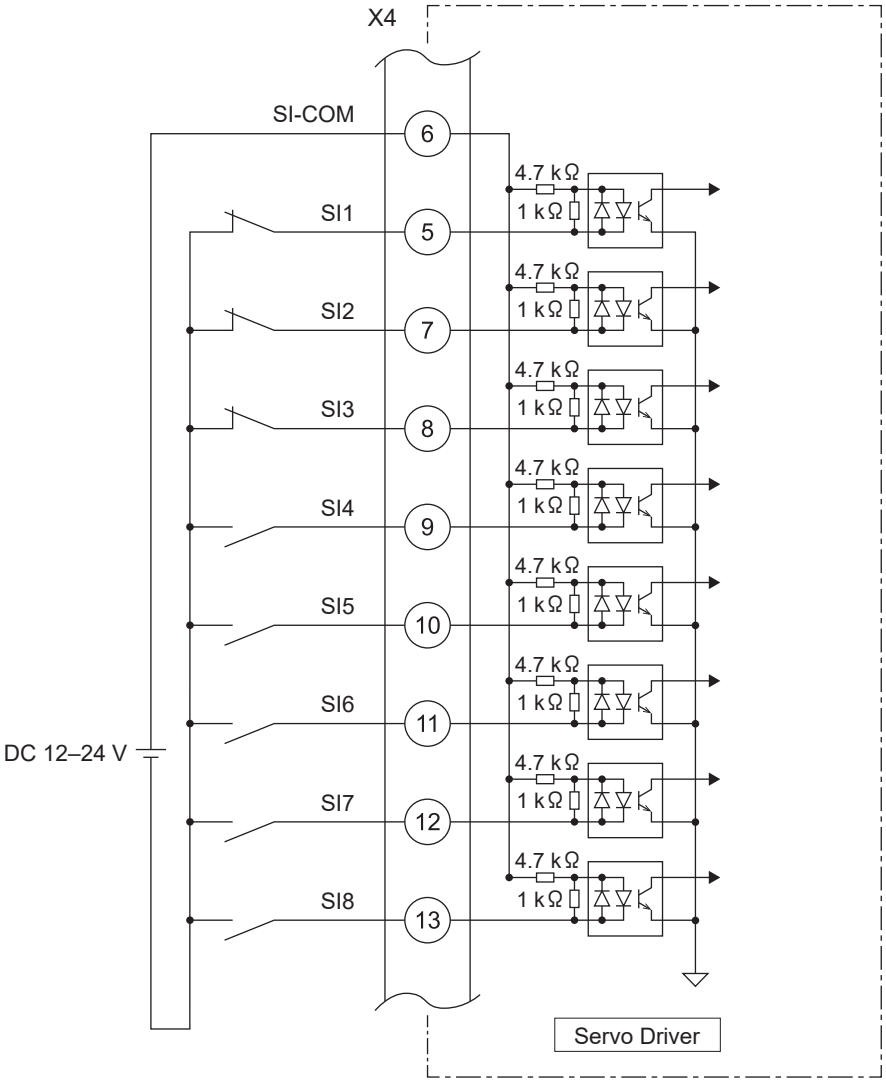


The functions of SI1 to SI8 are assigned using parameters.

For details, refer to “Technical Reference - Functional Specification”.

### 8.3.2.2 Control output

1 Be aware of the polarity of the power supply for control signals. Polarity connections contrary to the figure shown above can damage the servo driver.

2 If the relay is to be driven directly by the output signal, install a diode in parallel with the relay in the direction shown below. Failure to install a diode or installing it in the opposite direction will damage the servo driver.

3 When each output signal is received by a logic circuit such as a gate, ensure that it is not affected by noise.

4 The current to be passed through each output must not exceed a rated current of 40 mA, a maximum current of 50 mA, or an inrush current of 90 mA.

5 The output circuit is equipped with a limiting resistor (10 Ω).

Also, because the output transistor is a Darlington connection, voltage $V_{CE}$ (SAT) is approx. 1 V between the collector and emitter when the transistor is on, meaning that direct connections are not possible due to the fact that $V_{IL}$ cannot be satisfied with a normal TTL IC.

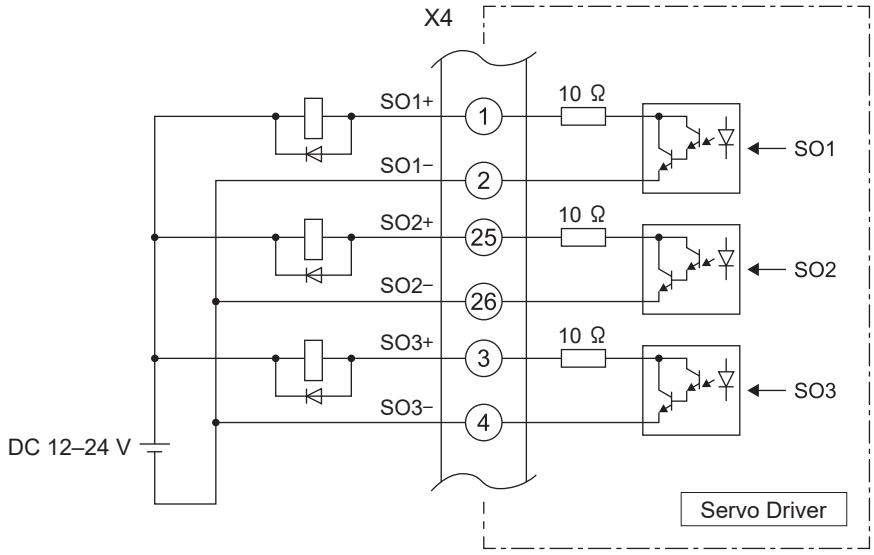


The functions of SO1 to SO3 are assigned using parameters.

For details, refer to “Technical Reference - Functional Specification”.

### 8.3.2.3 Feedback Output Signal/Position Compare Output Signal

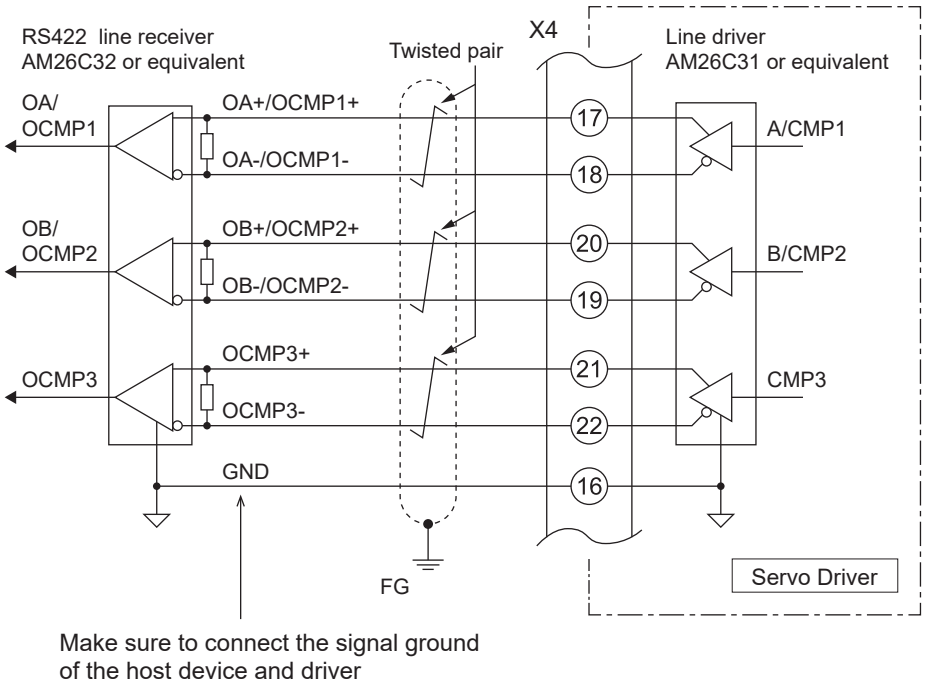


1 Use a line receiver (AM26C32 or equivalent) to receive output pulse. Ensure that an appropriate terminating resistor (approx. 330 Ω) is installed between the line receiver inputs.

2 Use at a maximum output frequency of 4 Mpps (after being multiplied by 4) or less.

### 8.3.3 Wiring to Connector X5, X6

1 Use a cable for the feedback scale whose strands are common shielded twist-pair wires with a core of 0.18 $mm^2$ or more.

2 The cable for the CS signal must be common shielded (twisted pair is preferable), with a core of 0.18 $mm^2$ or greater.

3 The maximum cable length is 20 m. For long wiring lengths, double wiring is recommended for the 5 V power supply to reduce the effects of voltage drops.

4 See *"7.9.1 CS Signal Interface"* for the CS signal connection interface.

5 Connect the CS signal ground to E0V.

6 Connect the outer sheath of the shielded wire on the motor side to the shield of the shielded wire from the feedback scale and the CS signal. Make sure to connect the sheath of the shielded wire on the servo driver side to the X5 and X6 shells (FG).

7 Keep the cables as far away from the wiring of the power lines (L1, L2, L3, L1C, L2C, U, V, W, ⏚) as possible (at least 30 cm).

Do not put them in the same duct as power lines or bind them together.

8 Do not connect anything to the empty terminals of X5 or X6.

9 The maximum power supply that can be supplied from X5 or X6 is 5 V ± 5% with a total maximum of 300 mA.

A customer-supplied external power supply is necessary if using a scale with a consumption current higher than this. Also, some scales may take time to initialize when powering on.

Create a design that achieves the desired operation timing after power is turned on.

10 X6 wiring is not required when using the magnetic pole position estimation function without using a CS signal.

### 8.3.3.1 Wiring example for A/B phase, home position signal differential input type

■ **When not using CS signal part twisted-pair cable**

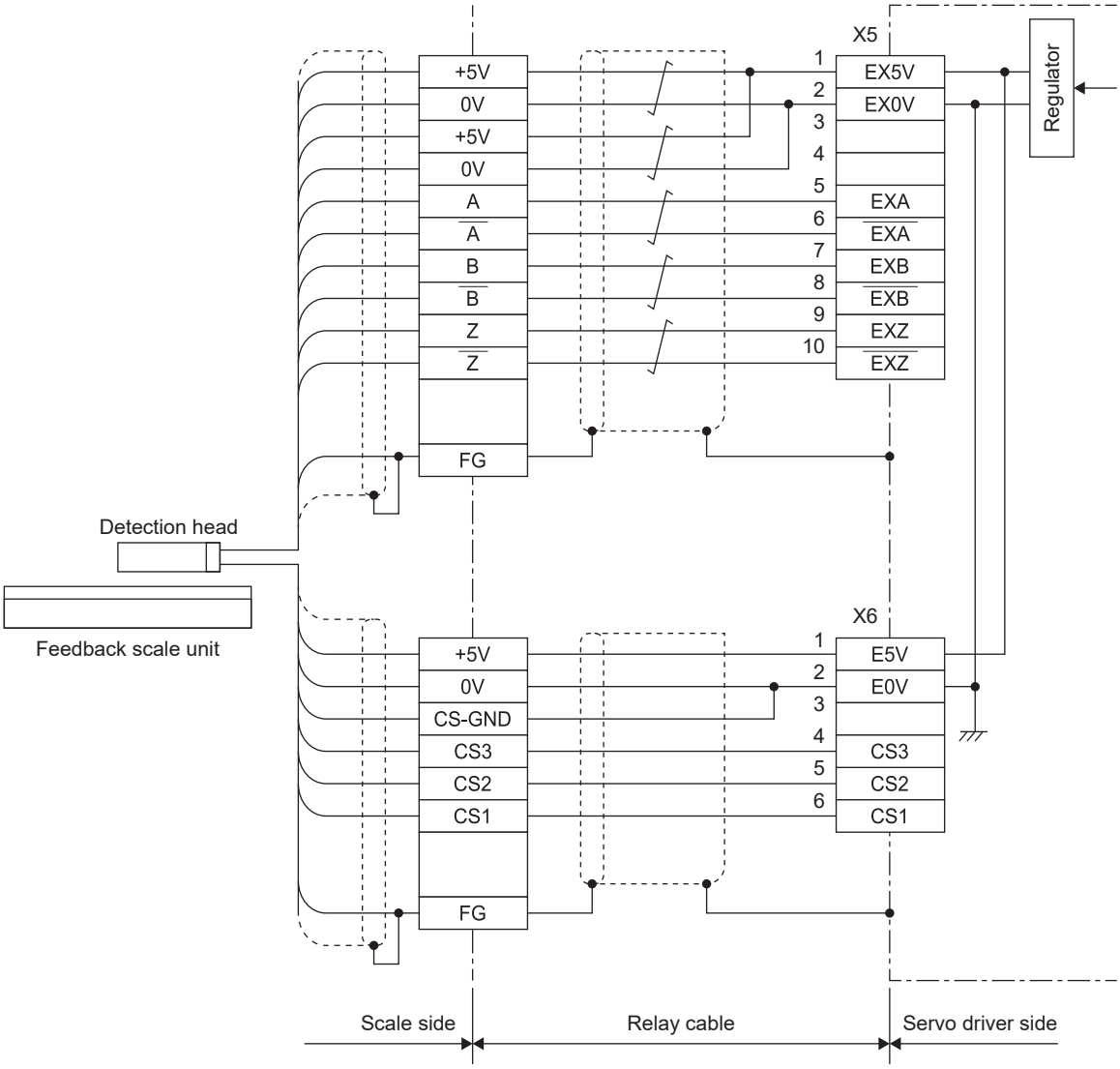

■ **When using CS signal part twisted-pair cable**

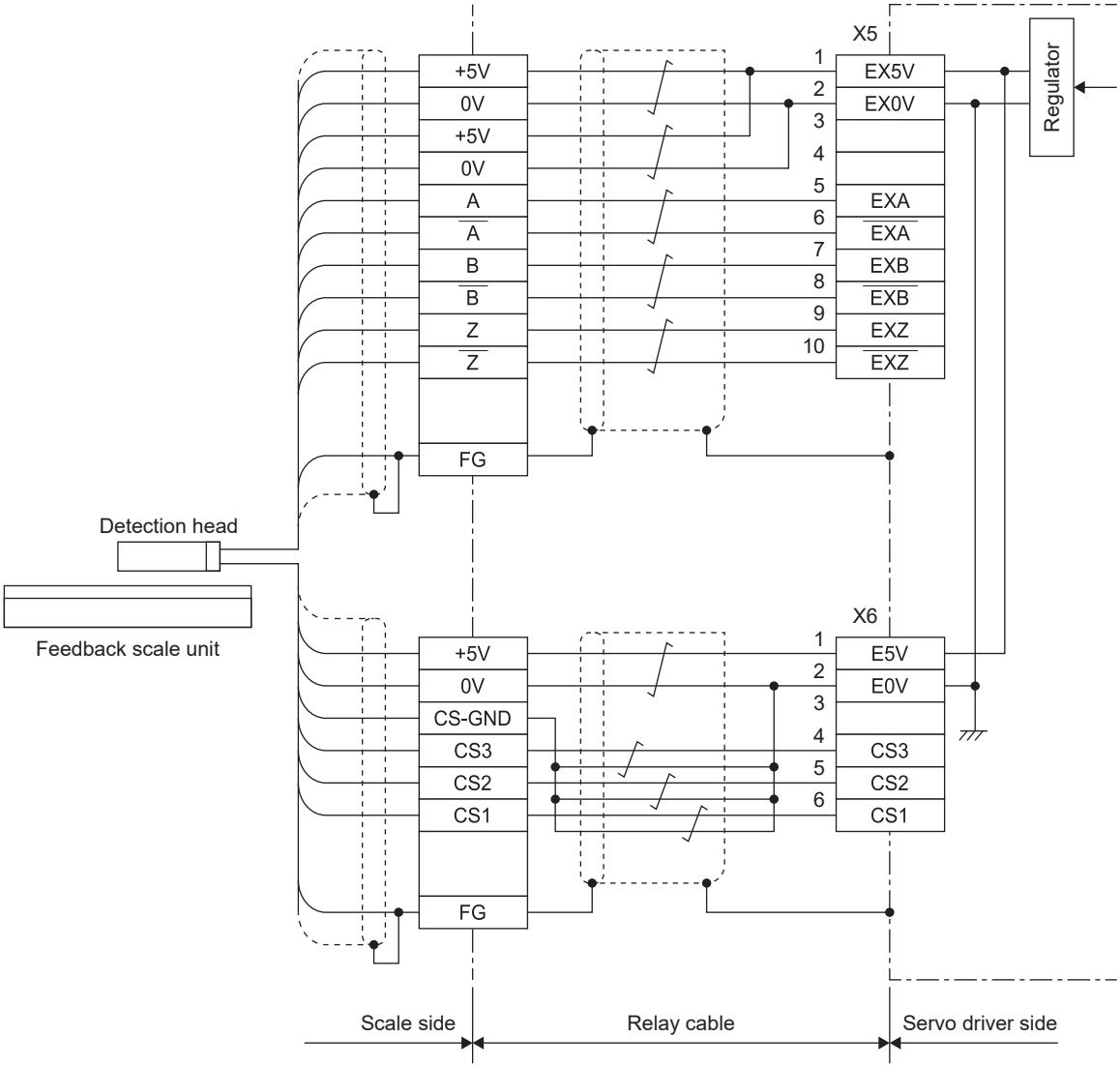

### 8.3.3.2 Serial communication type wiring example

■ **When not using CS signal part twisted-pair cable**

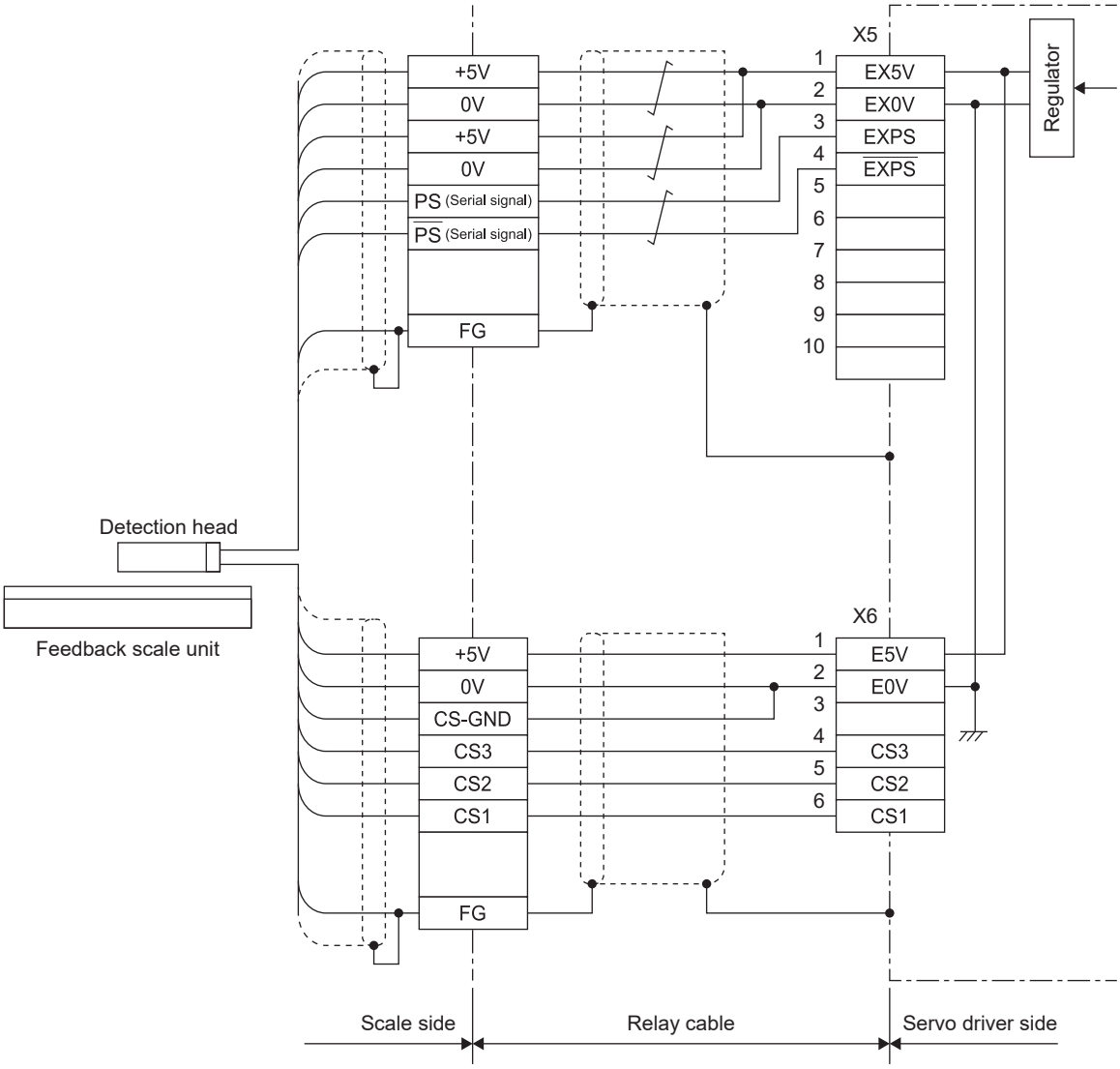

■ **When using CS signal part twisted-pair cable**

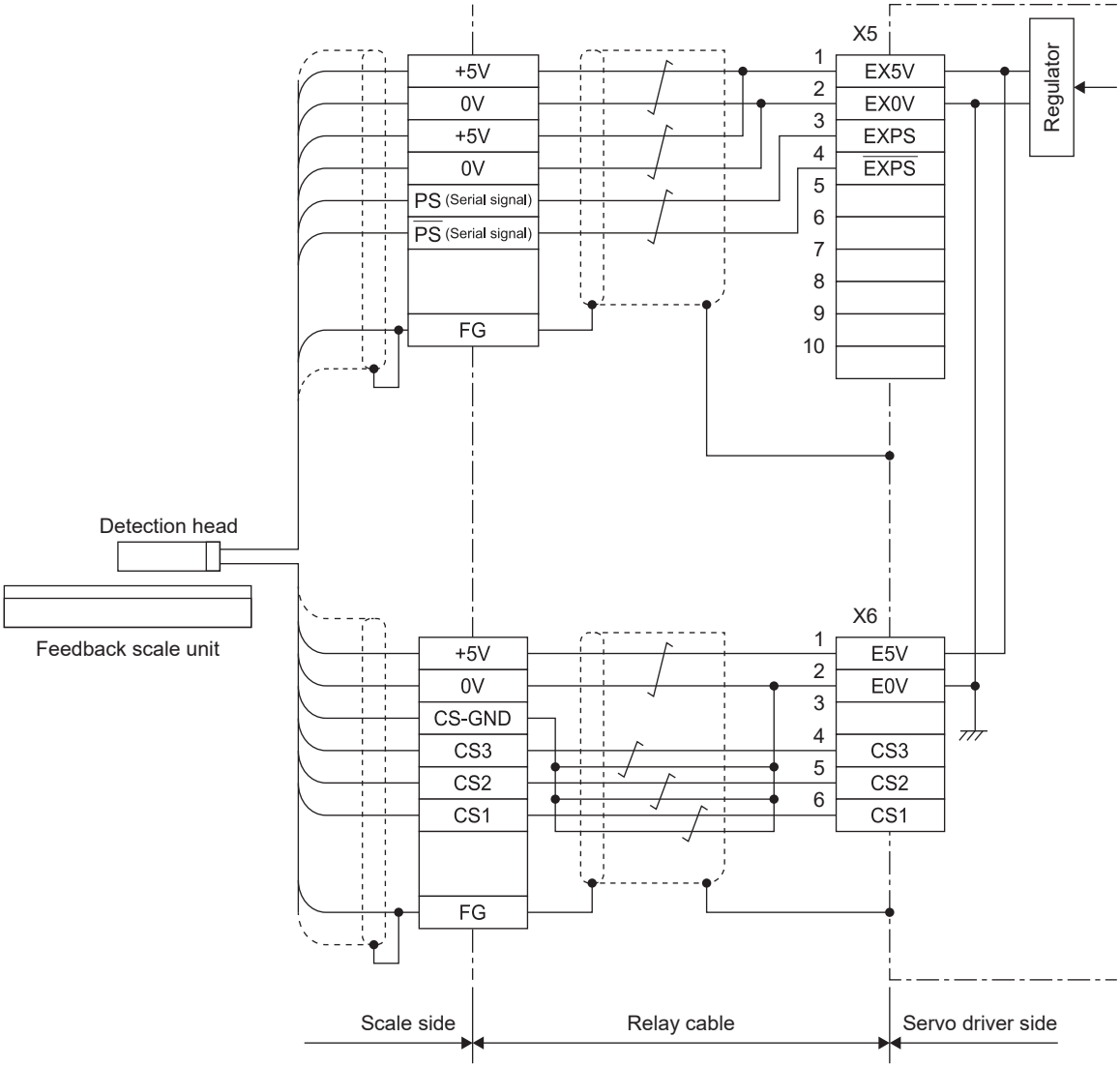

### 8.3.3.3 Wiring example with an external power supply

* The following wiring example is for A/B phase, home position signal differential input type.

* Connect the external power supply ground and sensor ground to EX0V, and use the same potential as the control ground inside the servo driver.

* The EX5V pin should be open to prevent external voltage from being supplied to this pin.

■ **When not using CS signal part twisted-pair cable**

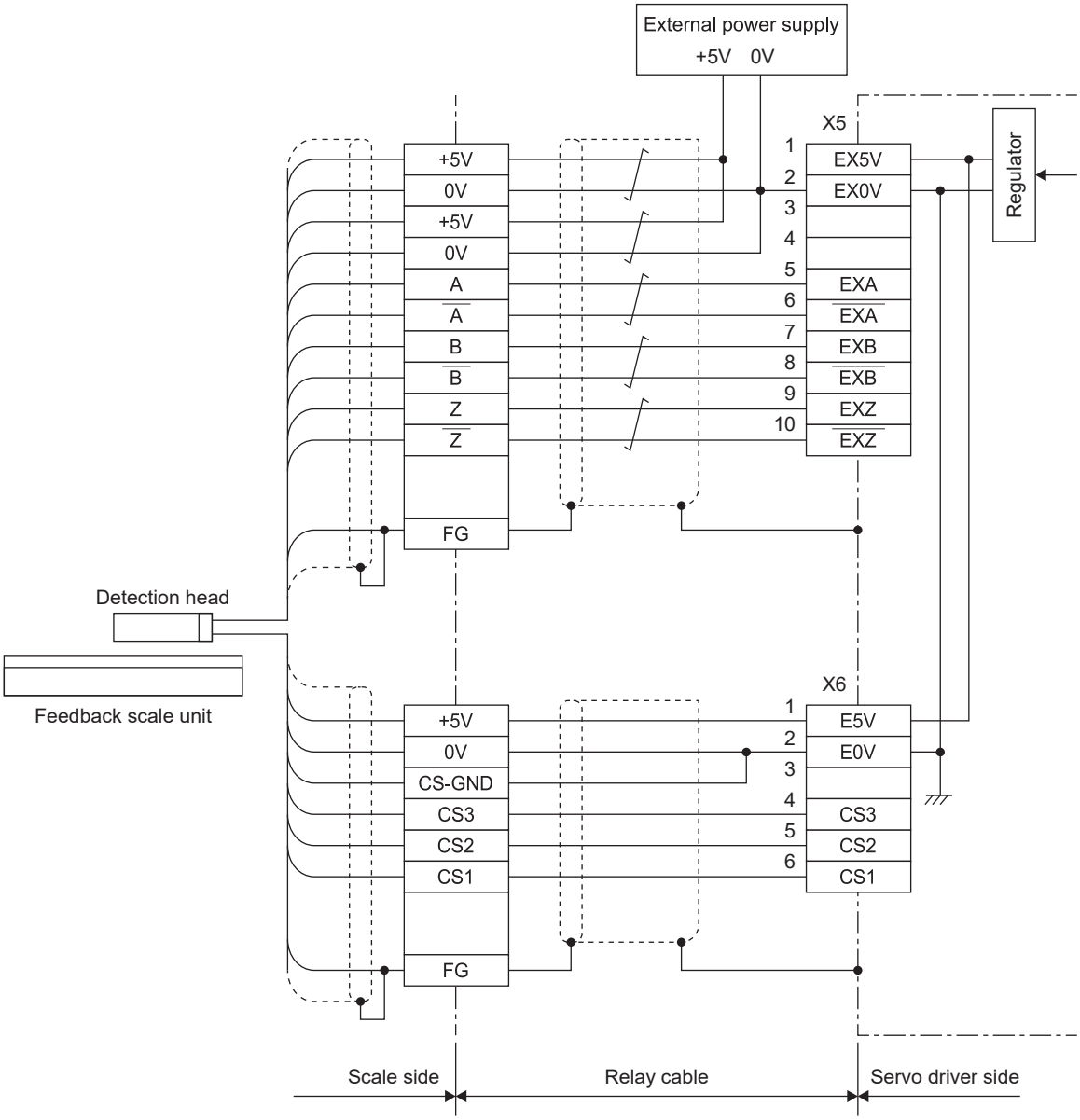

■ **When using CS signal part twisted-pair cable**

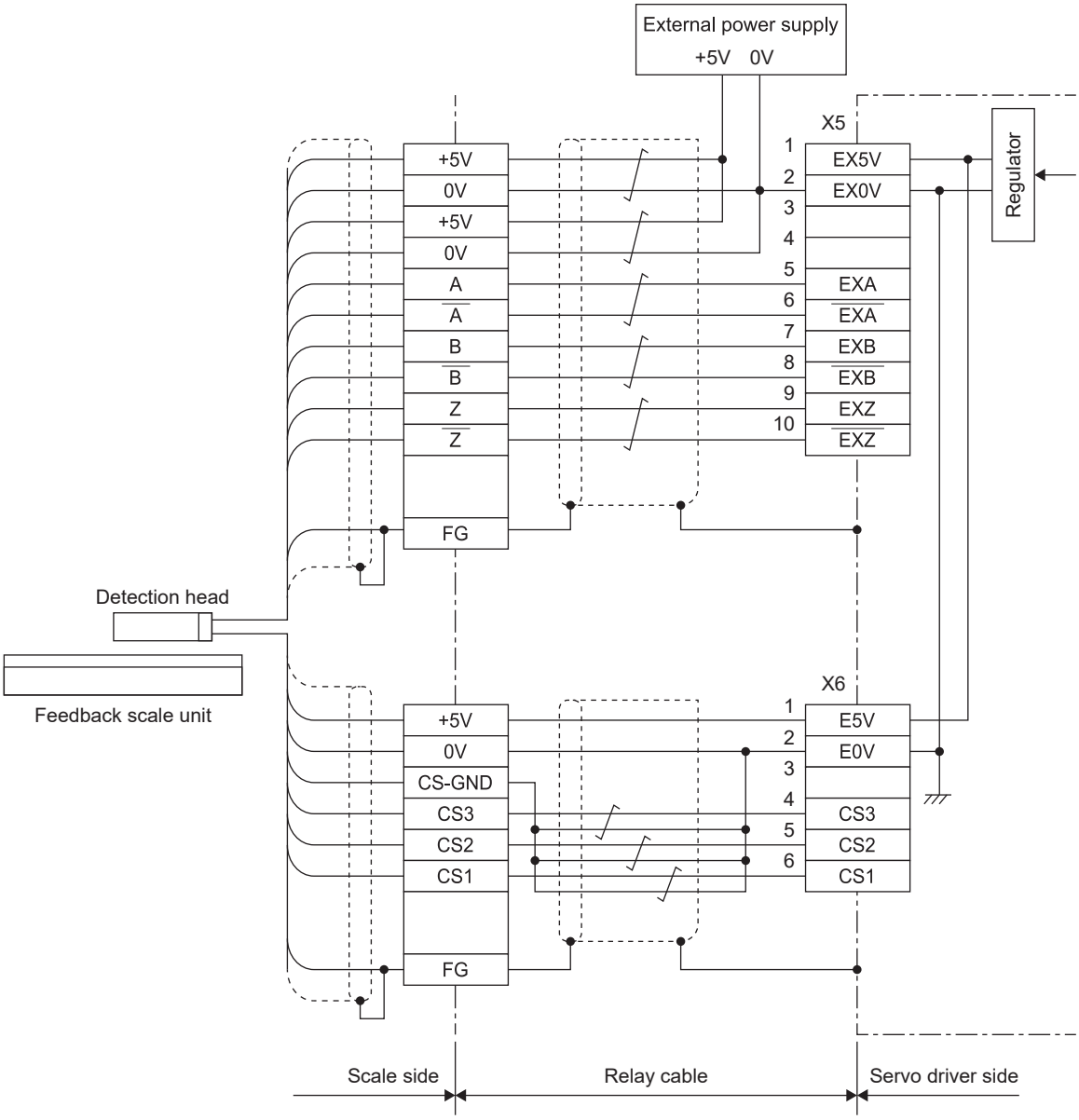

### 8.3.4 Wiring to Connectors X2A, X2B

1 Use shielded twisted pair (STP) cables of Category 5e or higher.

2 If both ends of the shield are not grounded, EMC properties will degrade.

When attaching the connector plug to each end of the cable, ensure that the shielded wire of the cable is connected to the metal shell of the plug.

3 The lead wire color and connector terminal must be in accordance with TIA/E1A-568B (see figure below).

The pair created by pins 3 and 6 is the signal wire. Make sure to wire the 3 pairs of pins that are not in use (1-2, 4-5, 7-8) to the connector.

4 If using a 2-pair wire instead of a 4-pair wire, connect it to pin pairs 1-2 and 3-6 on the connector while leaving pin pairs 4-5 and 7-8 unconnected.

5 The wiring length of the communication cable must be within a range that meets the following conditions.

Please contact us if the condition b is to be exceeded.

a. The length between each node must not exceed 100 m.

b. The total length of cable between nodes for all communication loops must not exceed 200 m.

6 Cable specifications, such as bending properties, temperature ranges, covering materials, will vary by manufacturer.

Select a cable that meets the usage conditions at your company.

Also select a movable cable that meets the usage conditions at your company.

**Communication cable for evaluations at Panasonic**

- Manufacturer: SANWA SUPPLY INC.
- Product number: KB-STP-**LBN
- Specification: Category 5e, STP

### 8.3.4.1 Connection of X2A

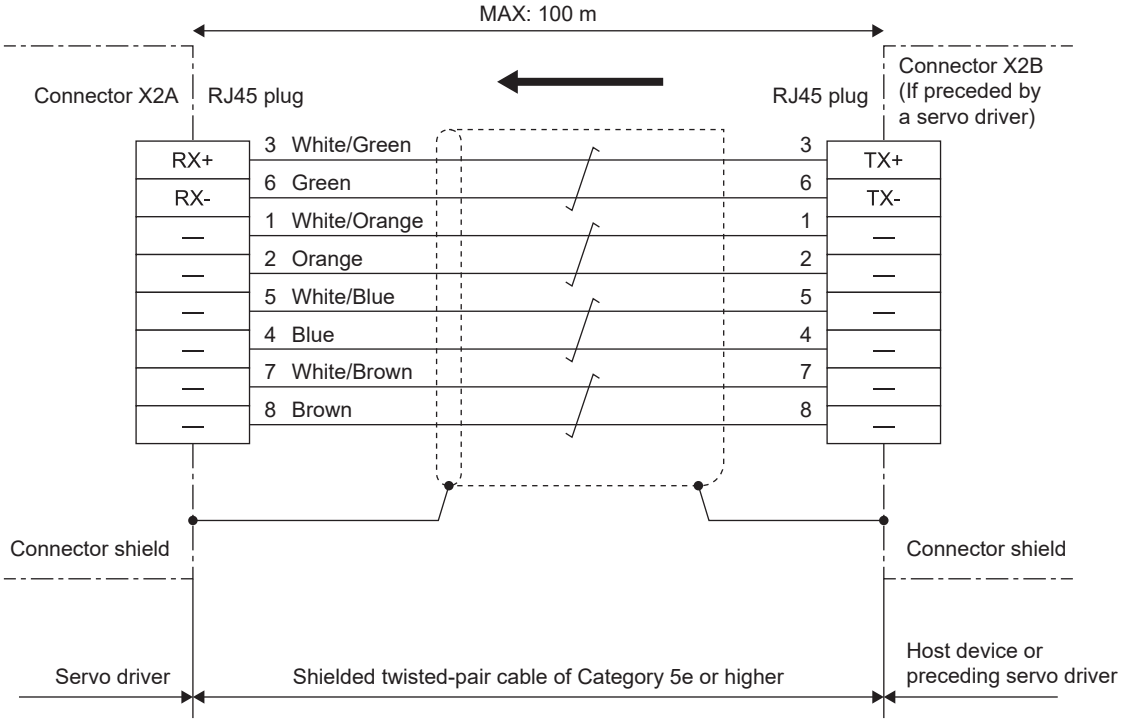


### 8.3.4.2 Connection of X2B

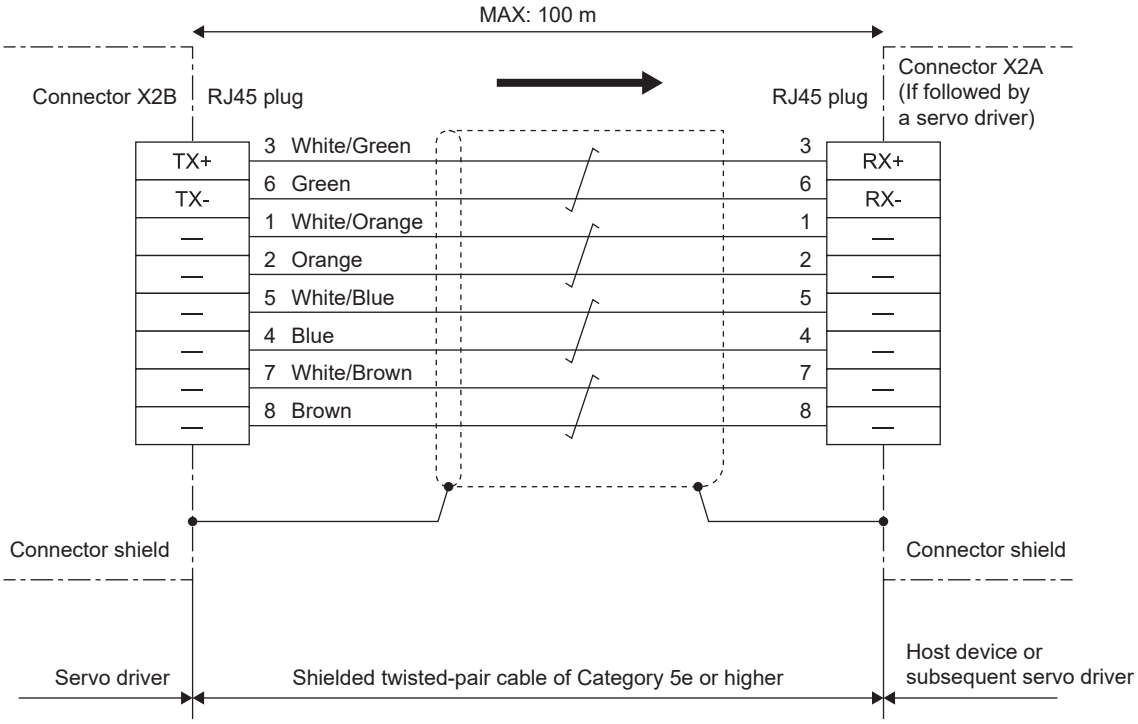


### 8.3.4.3 RJ45 plug pin configuration

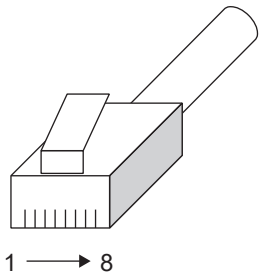

## 8.4 Dynamic Brake

The servo driver (sizes A–G) feature a built-in dynamic brake for emergency stopping.

The size H servo driver does not have a built-in dynamic brake.

The dynamic brake can be activated when the:

1 main power supply is off;

2 servo is off;

3 protection function is activated;

4 over-travel inhibit inputs (POT, NOT) of connector X4 are operated.

Under conditions (1) to (4) above, dynamic brake operation or free running can be selected using parameters during deceleration or after stopping.

However, when the control power supply input is off, the dynamic brake continues operating for servo driver sizes A-F, while the dynamic brake stops operating for servo driver sizes G and H.

Because the dynamic brake is rated for short time periods and is only to be used for emergency stopping, please adhere to the following:

1 Do not start or stop the device by turning the servo-on signal (SRV-ON) on or off.

This may damage the dynamic braking circuit incorporated into the servo drive.

2 Do not run the motor using an external power source.

If the motor is run externally, it will start acting as an electricity generator. This may cause it to short-circuit during operation of the dynamic brake, resulting in smoke or fire.

Doing so may also cause the dynamic brake to become disconnected, preventing it from functioning.

3 If the dynamic brake is applied when the device is operating at a high speed, allow a stop time of approximately 10 minutes.

Failure to do so may cause the dynamic brake to disconnect or the brake to no longer be operable.

A dynamic brake circuit (electromagnetic contactor for driving and resistor) can be externally attached to size G and H servo drivers.

In the case of the size G servo driver, external attachment is recommended when the capacity of the built-in dynamic brake is insufficient.

Wiring according to *"8.3.1 Wiring to Power Connectors and Terminal Blocks"* shown above and the wiring diagrams for *"8.3.1.5 Size G 200 V"* and *"8.3.1.6 Size H 200 V"*

## 8.5 Mounting Direction and Spacing

- The servo driver is a vertically mounted type. Ensure that it is mounted vertically.
- Servo driver sizes A–D and H come standard as base-mounted types (rear-mounted).
- If changing the mounting surface of servo driver sizes A–D, use a separately sold mounting bracket.
- Select a tightening torque for the mounting screws used to secure your product by considering screw strength and the material to which it will be mounted.

  Example: Mounting to steel with steel screws

  Sizes A–G: M5 2.7–3.3 N·m; H: M6 4.7–5.7 N·m
- To ensure effective cooling, ensure surrounding space for airflow.
- Install a fan to achieve a uniform temperature within the control panel.
- Sizes D–F frames are equipped with a cooling fan on the bottom, while sizes G and H are equipped with cooling fans on the bottom and top.
- Observe the environmental conditions for the control panel as described in chapter *"9.3.1 Installation Environment"* .
- The servo driver must be secured to a grounded conductive frame.

- If the area where the servo driver is to be mounted is painted, removing the paint before installation will help to prevent noise.
- If using custom brackets, the bracket surface must have a conductive plating.
- Measure the ambient temperature of the servo driver at a location that is 50 mm from the side or bottom of the servo driver.

  If measuring from a distance of 50 mm is not possible, instead measure at the midpoint of the gap between the obstacle preventing measurement and the servo driver.

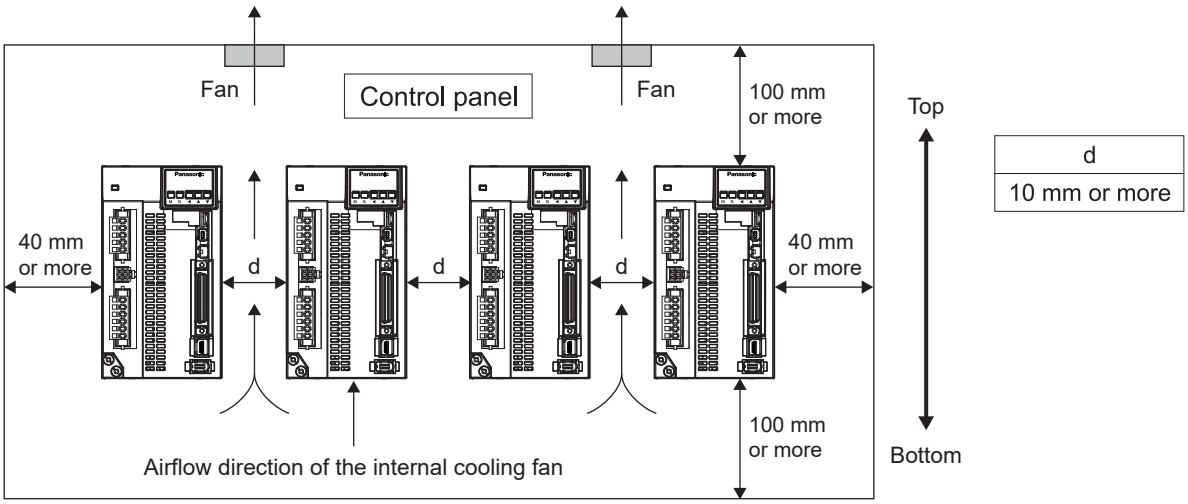

# 9 Compliance with International Standards

## 9.1 List of Compliance Standards for Servo Drivers

| | | Standard No. |
|---|---|---|
| EU/UK Standards | EMC | EN55011:2016/A11:2020 (Group 1, Class A)<br>EN61000-6-2<br>EN61000-6-4<br>EN61800-3:2004/A1:2012 (Category C3, Second environment) |
| | Low voltage | EN61800-5-1 |
| | Machinery (Functional Safety) | ISO13849-1<br>EN61508<br>EN62061<br>EN61800-5-2<br>IEC61326-3-1<br>IEC60204-1 |
| UL standards | | UL61800-5-1 (File No. E164620) |
| CSA standards | | C22.2 No.274 |
| KC | | KN11<br>KN61000-4-2, 3, 4, 5, 6, 8, 11 |

IEC: International Electrotechnical Commission

EN: Europaischen Norman

EMC: Electromagnetic Compatibility

UL: Under writers Laboratories

CSA: Canadian Standards Association

KC: Radio Waves Act (South Korea)

Safety parameters

| | With EDM diagnostic | Without EDM diagnostic |
|---|---|---|
| Safety integrity level | EN61508 (SIL3)<br>EN62061 (SILCL3) | EN61508 (SIL2)<br>EN62061 (SILCL2) |
| Performance level | ISO13849-1 PL e (Cat.3) | ISO13849-1 PL d (Cat.3) |
| Safety function | EN61800-5-2 (SIL 3, STO) | EN61800-5-2 (SIL 2, STO) |
| Probability of dangerous failure per unit of time | <For size A, B, C, D, E, F><br>PFH = 1.34 ×$10^{-8}$<br>(%SIL3=13.4%)<br><For size G and H><br>PFH = 1.78 ×$10^{-8}$<br>(%SIL3=17.8%) | <For size A, B, C, D, E, F><br>PFH = 1.40 ×$10^{-8}$<br>(%SIL2=1.40%)<br><For size G and H><br>PFH = 1.85 ×$10^{-8}$<br>(%SIL2=1.85%) |
| Mean time to dangerous failure | MTTFd: High (100 years) | MTTFd: High (100 years) |
| Average self-diagnostic coverage | DC: Medium | DC: Low |
| Mission time | 15 years | 15 years |

## 9.2 EU directives and UK regulations

Our products comply with standards associated with the EU low voltage directive/UK low voltage regulation in order to facilitate compliance of embedded equipment and devices with the EU directives/UK regulations.

### 9.2.1 Compliance with the EU EMC directive/UK EMC regulation

**EN 55011**

Warning: Class A equipment is intended for use in an industrial environment. Conductive and radioactive interference can make it difficult to ensure electromagnetic compatibility in other environments.

Caution: This equipment is not intended for use in residential environments and may not provide adequate protection to radio reception in such environments.

**EN 61800-3**

Servo drivers and servo motors are not intended for general household use or for connection to low-voltage public communication lines. Radio frequency interference may occur when connected to such circuits.

To comply with the EU EMC directive/UK EMC regulation, use a noise filter, a surge absorber, and a ferrite core.

The compliance of machinery and equipment with the EU EMC directive/UK EMC regulation must be confirmed on machinery and equipment in its final state incorporating servo drivers and servo motors.

### 9.2.2 Compliance with EN 61800-5-1:2007/A11:2021

1 **Earth fault protection**

This product does not have an earth fault protection function. Install a circuit breaker for wiring or an earth leakage breaker according to the grounding system.

Earth fault protection conditions for earth fault circuit breakers are shown below. The requirements of EN 60364-4-41 are met under these conditions.

Obey the laws and regulations of the country or region where you use the TT system. The rated sensitivity current and loop impedance of the earth leakage breaker are specified in some cases. You may also need a type B earth fault circuit breaker.

For TN system

| Model | MCCB | | | Voltage to earth [V] | Acceptable maximum fault loop impedance [Ω] |
|---|---|---|---|---|---|
| | Rated current [A] | Type name | Manufacturer | | |
| MADL*01** | 10 | BW50RAGU | Fuji Electric | 100 | 0.43 |
| MADL*11** | 10 | BW50RAGU | Fuji Electric | 100 | 0.44 |
| MBDL*21** | 10 | BW50RAGU | Fuji Electric | 100 | 0.45 |
| MCDL*31** | 15 | BW50RAGU | Fuji Electric | 100 | 0.34 |
| MADL*05** | 10 | BW50RAGU | Fuji Electric | 115 | 0.53 |
| MADL*15** | 10 | BW50RAGU | Fuji Electric | 115 | 0.54 |
| MBDL*25** | 10 | BW50RAGU | Fuji Electric | 115 | 0.55 |
| MCDL*35** | 15 | BW50RAGU | Fuji Electric | 115 | 0.42 |
| MDDL*45** | 20 | BW50RAGU | Fuji Electric | 115 | 0.28 |
| MDDL*55** | 20 | BW50RAGU | Fuji Electric | 115 | 0.28 |
| MEDL*83** | 30 | BW50RAGU | Fuji Electric | 115 | 0.16 |
| MEDL*93** | 30 | BW50RAGU | Fuji Electric | 115 | 0.16 |
| MFDL*A3** | 50 | BW50RAGU | Fuji Electric | 115 | 0.17 |
| MFDL*B3** | 50 | BW50RAGU | Fuji Electric | 115 | 0.17 |

| Model | MCCB | | | Voltage to earth [V] | Acceptable maximum fault loop impedance [Ω] |
|---|---|---|---|---|---|
| | Rated current [A] | Type name | Manufacturer | | |
| MGDL*C3** | 60 | BW100EAGU | Fuji Electric | 115 | 0.12 |
| MHDL*E3** | 125 | BW125JAGU | Fuji Electric | 115 | 0.06 |
| MHDL*F3** | 175 | BW50RAGU | Fuji Electric | 115 | 0.03 |
| MDDL*44** | 10 | BW50RAGU | Fuji Electric | 219 | 1.08 |
| MDDL*54** | 10 | BW50RAGU | Fuji Electric | 219 | 1.09 |
| MDDL*64** | 10 | BW50RAGU | Fuji Electric | 219 | 1.10 |
| MEDL*84** | 15 | BW50RAGU | Fuji Electric | 219 | 0.90 |
| MFDL*A4** | 30 | BW50RAGU | Fuji Electric | 219 | 0.44 |
| MFDL*B4** | 30 | BW50RAGU | Fuji Electric | 219 | 0.44 |
| MGDL*C4** | 30 | BW50RAGU | Fuji Electric | 219 | 0.54 |
| MHDL*E4** | 60 | BW100EAGU | Fuji Electric | 219 | 0.22 |
| MHDL*F4** | 100 | BW100EAGU | Fuji Electric | 219 | 0.22 |

For TT system

| Model | ELCB | | | | Voltage to earth [V] | Acceptable maximum fault loop impedance [Ω] |
|---|---|---|---|---|---|---|
| | Rated current [A] | rated sensitivity current [mA] | Type name | Manufacturer | | |
| MADL*01** | 10 | 30 | EW50RAGU | Fuji Electric | 100 | 360 |
| MADL*11** | 10 | 30 | EW50RAGU | Fuji Electric | 100 | 360 |
| MBDL*21** | 10 | 30 | EW50RAGU | Fuji Electric | 100 | 360 |
| MCDL*31** | 15 | 30 | EW50RAGU | Fuji Electric | 100 | 360 |
| MADL*05** | 10 | 100 | EW50RAGU | Fuji Electric | 115 | 207 |
| MADL*15** | 10 | 100 | EW50RAGU | Fuji Electric | 115 | 207 |
| MBDL*25** | 10 | 100 | EW50RAGU | Fuji Electric | 115 | 207 |
| MCDL*35** | 15 | 100 | EW50RAGU | Fuji Electric | 115 | 207 |
| MDDL*45** | 20 | 100 | EW50RAGU | Fuji Electric | 115 | 207 |
| MDDL*55** | 20 | 100 | EW50RAGU | Fuji Electric | 115 | 207 |
| MEDL*83** | 30 | 100 | EW50RAGU | Fuji Electric | 115 | 207 |
| MEDL*93** | 30 | 100 | EW50RAGU | Fuji Electric | 115 | 207 |
| MFDL*A3** | 50 | 100 | EW50RAGU | Fuji Electric | 115 | 207 |
| MFDL*B3** | 50 | 100 | EW50RAGU | Fuji Electric | 115 | 207 |
| MGDL*C3** | 60 | 100 | EW100EAGU | Fuji Electric | 115 | 207 |
| MHDL*E3** | 125 | 100 | EW125JAGU | Fuji Electric | 115 | 172 |
| MHDL*F3** | 175 | 100 | EW250JAGU | Fuji Electric | 115 | 166 |
| MDDL*44** | 10 | 100 | EW50RAGU | Fuji Electric | 219 | 394 |
| MDDL*54** | 10 | 100 | EW50RAGU | Fuji Electric | 219 | 394 |
| MDDL*64** | 10 | 100 | EW50RAGU | Fuji Electric | 219 | 394 |
| MEDL*84** | 15 | 100 | EW50RAGU | Fuji Electric | 219 | 394 |
| MFDL*A4** | 30 | 100 | EW50RAGU | Fuji Electric | 219 | 394 |
| MFDL*B4** | 30 | 100 | EW50RAGU | Fuji Electric | 219 | 394 |
| MGDL*C4** | 30 | 100 | EW50RAGU | Fuji Electric | 219 | 394 |

| Model | ELCB | | | | Voltage to earth [V] | Acceptable maximum fault loop impe-dance [Ω] |
|---|---|---|---|---|---|---|
| | Rated current [A] | rated sensitivity current [mA] | Type name | Manufacturer | | |
| MHDL*E4** | 60 | 100 | EW100EAGU | Fuji Electric | 219 | 394 |
| MHDL*F4** | 100 | 100 | EW100EAGU | Fuji Electric | 219 | 394 |

2 **Over heat protection/Over load protection**

The servo amplifier has a built-in servo motor overload protection function, but the servo motor does not have an overheat protection function. If it becomes necessary to meet NEC standards, take measures to protect the servo motor from overheating.（Refer to *"9.5 Compliance with UL Standards"* "4" Load Protection and overheating protection)

## 9.3 Configuration of Peripheral Devices

### 9.3.1 Installation Environment

Use in an environment with a pollution degree 2 as stipulated in IEC60664-1.

(Example: Install in an IP54 metal control panel.)

Make sure to connect a molded case circuit breaker (MCCB) or fuse that is compliant with IEC standards or that is UL-approved to the main power supply.

The power supply for parallel I/O should be a DC 24 V power supply with double or reinforced insulation.

100 V/200 V type specification

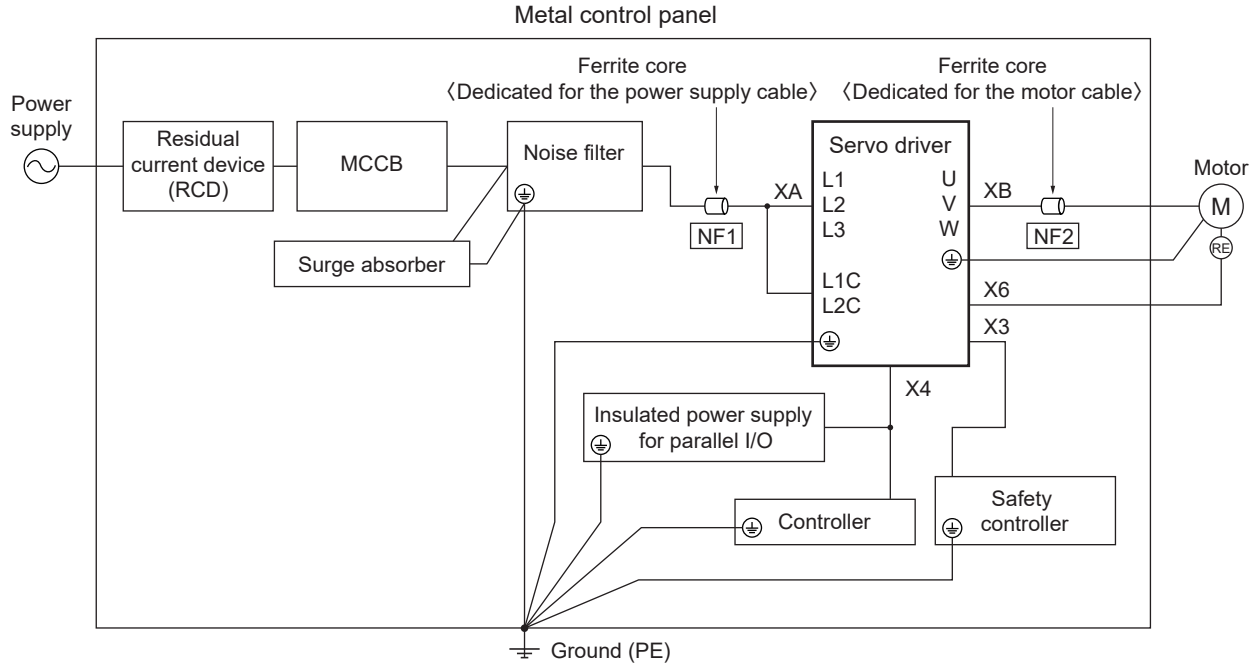


400 V type specification

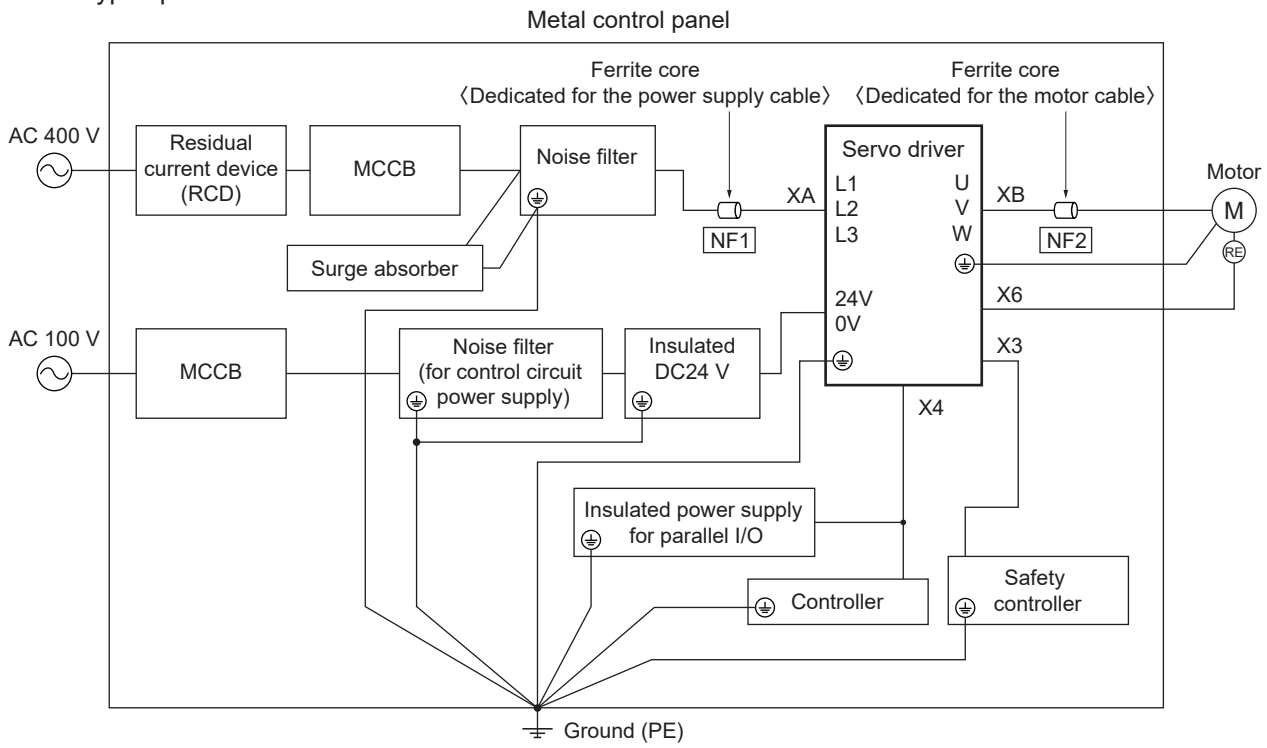

Ferrite core installation status during EMC certification test

| Symbol | Location | Applicable size | Option product number | Manufacturer product number | Manufacturer | Quantity |
|---|---|---|---|---|---|---|
| NF1 | Power supply cable | (100 V) C<br>(200 V) C, D, F | – | – | – | None |
| | | (100 V) A, B<br>(200 V) A, B, E<br>(400 V) D, E, F | DV0P1460 | ZCAT3035-1330 | TDK Corporation | 1 (*1) |
| | | (200 V) G, H<br>(400 V) G, H | DV0P1460 | ZCAT3035-1330 | TDK Corporation | 3 (*2) |
| | | | Recommended parts | RJ8095 | Konno Kogyosho Co., Ltd. | 1 (*3) |
| NF2 | Motor cable | (100 V) A, B, C<br>(200 V) A, B, C, D, E<br>(400 V) D, E, F | DV0P1460 | ZCAT3035-1330 | TDK Corporation | 1 (*1) |
| | | (200 V) F | DV0P1460 | ZCAT3035-1330 | TDK Corporation | 2 (*4) |
| | | (200V) G, H<br>(400 V) G, H | DV0P1460 | ZCAT3035-1330 | TDK Corporation | 3 (*2) |
| | | | Recommended parts | T400-61D | MICROMETALS | 1 (*3) |

*1 Power supply cables (L1, L2, L3) should be wound together for one circle. Motor cables (U, V, W) should also be wound together for one circle. One circle (bypass one line).

*2 Power supply cables (L1, L2, L3) should be wound individually for one circle. Motor cables (U, V, W) should also be wound individually for one circle. One circle (bypass one line).

*3 Power supply cables (L1, L2, L3) should be wound together for four circles. Motor cables (U, V, W) should also be wound together for four circles. If four turns is difficult, use two identical ferrite cores and make two turns for each.

*4 Combine motor wires (U, V, W) and attach two ferrite cores in series. One circle (bypass one line).

### 9.3.2 Power Supply

| | | | | |
|---|---|---|---|---|
| 100 V (Sizes A–C) | : | Single-phase 100–120 V | +10 %<br>-15 % | 50/60 Hz |
| 200 V (Sizes A–D) | : | Single-phase/3-phase 200 V–240 V | +10 %<br>-15 % | 50/60 Hz |
| 200 V (Sizes E–H) | : | 3-phase 200–240 V | +10 %<br>-15 % | 50/60 Hz |
| 400 V (Sizes D–H) Main power supply | : | 3-phase 380 Y/220–480 Y/277 V<br>TN (ground the neutral point to earth) | +10 %<br>-15 % | 50/60 Hz |
| 400 V (Sizes D–H) Controlled power supply | : | DC24 V | ±15 % | |

1 Use in an OVC III environment as stipulated in IEC60664-1.

2 Use an insulated DC 12 to 24 V parallel I/O power supply that is in compliance with the CE marking or the EN standard (EN60950).

### 9.3.3 Molded Case Circuit Breaker (MCCB)

Make sure to connect a molded case circuit breaker (MCCB) that is compliant with IEC standards or that is UL-approved (listed, with Ⓤ mark) between the power supply and noise filter.

The product's short-circuit protection circuit is not intended to protect the branch circuit.

Select branch circuit protection in accordance with the NEC standard and local standards.

### 9.3.4 Noise Filter

If using multiple servo drivers and installing one noise filter for all to the power supply, consult with the manufacturer of the noise filter.

### 9.3.5 Surge Absorber

Install the surge absorber to the primary side of the noise filter.

**Caution**

- Always remove the surge absorber before pressure testing machinery and equipment.
  Failure to do so may result in damage to the surge absorber.

### 9.3.6 Ferrite Core

Install ferrite cores on the power supply input line and motor output line.

### 9.3.7 Grounding

1 To prevent electric shock, make sure to connect the protective ground terminal (⏚) of the servo driver with the protective ground (PE) of the control panel.

2 Do not tighten the connection to the protective ground terminal (⏚). There are two protective ground terminals.

## 9.4 List of Peripheral Devices Applicable to the Servo Driver

| Servo driver | Voltage specification | Power supply capacity (At rated load) | Electromagnetic contactor (Rated energizing current/ Open heat current) | MCCB Rated current | Noise filter | Surge absorber | Ferrite core | |
|---|---|---|---|---|---|---|---|---|
| | | | | | | | Power supply cable | Motor cable |
| MADL□01□□ | Single-phase 100 V | Approx. 0.4 kVA | 20 A | 10 A | DV0P4170 (for single-phase) / DV0PM20042 | DV0P4190 (for single-phase) / DV0P1450 (for 3-phase) | DV0P1460 | DV0P1460 |
| MADL□11□□ | | | | | | | | |
| MADL□05□□ | Single-phase/ 3-phase 200 V | Approx. 0.5 kVA | | | | | | |
| MADL□15□□ | | | | | | | | |
| MBDL□21□□ | Single-phase 100 V | Approx. 0.5 kVA | | | | | | |
| MBDL□25□□ | Single-phase/ 3-phase 200 V | Approx. 0.9 kVA | | | | | | |
| MCDL□31□□ | Single-phase 100 V | Approx. 0.9 kVA | | 15 A | DV0PM20042 | | | |
| MCDL□35□□ | Single-phase/ 3-phase 200 V | Approx. 1.8 kVA | | | | | | |
| MDDL□45□□ | Single-phase/ 3-phase 200 V | Approx. 2.4 kVA | 30 A | 20 A | DV0P4220 | | | |
| MDDL□55□□ | | Approx. 2.9 kVA | | | | | | |
| MEDL□83□□ | 3-phase 200 V | Approx. 3.8 kVA | 60 A | 30 A | DV0PM20043 | DV0P1450 | | |
| MEDL□93□□ | | Approx. 4.5 kVA | | | | | | |
| MFDL□A3□□ | | Approx. 5.2 kVA | 100 A | 50 A | DV0P3410 | | | |
| MFDL□B3□□ | | Approx. 7.8 kVA | | | | | | |
| MGDL□C3□□ | | Approx. 11 kVA | 100 A | 60 A | HF3080C-SZA | | DV0P1460 RJ8095 | DV0P1460 T400-61D |
| MHDL□E3□□ | | Approx. 20 kVA | 150 A | 125 A | HF3100C-SZA | | | |
| MHDL□F3□□ | | Approx. 28 kVA | | 175 A | | | | |
| MDDL□44□□ | 3-phase 400 V | Approx. 1.8 kVA | 20 A | 10 A | FN3258-16-44 | LT-C34G801WS | DV0P1460 | DV0P1460 |
| MDDL□54□□ | | Approx. 2.4 kVA | | | | | | |
| MDDL□64□□ | | Approx. 2.9 kVA | | | | | | |
| MEDL□84□□ | | Approx. 3.8 kVA | 30 A | 15 A | | | | |
| MFDL□A4□□ | | Approx. 5.2 kVA | 60 A | 30 A | FN3258-30-33 | | | |
| MFDL□B4□□ | | Approx. 7.8 kVA | | | | | | |
| MGDL□C4□□ | | Approx. 11 kVA | | | HF3040C-SZC | DV0PM20050 | DV0P1460 RJ8095 | DV0P1460 T400-61D |
| MHDL□E4□□ | | Approx. 20 kVA | 100 A | 60 A | HF3080C-SZA | | | |
| MHDL□F4□□ | | Approx. 28 kVA | | 100 A | | | | |

* For both single-phase/3-phase 200 V specifications, select the peripherals according to the power supply used.

**Notes**

- Select a molded case circuit breaker (MCCB) and noise filter with a capacity that matches the power supply capacity (considering load conditions).
- Use copper conductor wires with a temperature rating of 75°C or higher when wiring terminal blocks and ground terminals.

  The protective ground terminal is M4 for sizes A–E, M5 for sizes F and G, and M6 for size H.

  If the tightening torque of the screws exceeds the maximum value (see the terminal block description page), the terminal block may be damaged.
- The wire diameter of the ground cable must be 2.0 $mm^2$ (AWG 14) or more for outputs between 50 W–2.5 kW, 3.5 $mm^2$ (AWG 12) or more for outputs between 3.0 kW–5.0 kW, 22 $mm^2$ (AWG 4) or more for an output of 15.0 kW, and 38 $mm^2$ (AWG 2) or more for an output of 22.0 kW.
- For sizes A–E, use the included dedicated connectors.
- The tightening torque of the screw used for connecting connector (X4) to the host controller should be between 0.2 ± 0.05 N·m.

  If the tightening torque of the screws exceeds the maximum value, the connector on the servo driver side may be damaged.

| | Option product number | Manufacturer product number | Manufacturer |
|---|---|---|---|
| Surge absorber | DV0P1450 | R·A·V-781BXZ-4 | Okaya Electric Industries |
| | DV0P4190 | R·A·V-781BWZ-4 | |
| | DV0PM20050 | R·A·V-801BXZ-4 | |
| | – | LT-C34G801WS | Soshin Electric |
| Ferrite core | DV0P1460 | ZCAT3035-1330 | TDK Corporation |
| | – | RJ8095 | Konno Kogyosho Co., Ltd. |
| | – | T400-61D | MICROMETALS |
| Noise filter | DV0P4170 | SUP-EK5-ER-6 | Okaya Electric Industries |
| | DV0P4220 | 3SUP-HU30-ER-6 | |
| | DV0P3410 | 3SUP-HL50-ER-6B | |
| | DV0PM20042 | 3SUP-HU10-ER-6 | |
| | DV0PM20043 | 3SUP-HU50-ER-6 | |
| | – | HF3080C-SZA | Soshin Electric |
| | – | HF3100C-SZA | |
| | – | HF3040C-SZC | |
| | – | FN3258-16-44 | Schaffner EMC |
| | – | FN3258-30-33 | |

## 9.5 Compliance with UL Standards

1 Installation environment

Install in an environment with a pollution degree 2 as stipulated in IEC60664-1.

Make sure to connect a molded case circuit breaker (MCCB) or fuse that is UL-approved to the main power supply.

Use copper conductor wires with a temperature rating of 75°C or higher when wiring.

2 Short circuit current rating (SCCR)

This servo driver is compatible with power supplies whose voltage is less than the maximum input voltage and which have a symmetrical current of 5000 Arms or less.

3 Branch circuit protection

Protect the branch circuit in accordance with the NEC (National Electrical Code) and local standards.

4 Load protection and overheating protection

The servo driver has a built-in servo motor overload protection function.

The overload protection function operates based on specified time limit characteristics when current has reached 115% or more of the rating.

For overload protection time characteristics, please refer to "Technical Reference Document - Basic Function Specifications - 7. Protective function/Alarm function".

The servo motor does not have an overheating protection function. If NEC compliance is required, implement overheating protection measures for the servo motor.

The servo driver has the thermal memory (shut down) function specified in EN61800-5-1 / UL61800-5-1, but does not have thermal memory (loss of power) or speed sensitivity functions.

## 9.6 Radio Waves Act (South Korea)

Under South Korea's Radio Waves Act, this servo driver is classified as a Class A commercial electromagnetic radio wave generator that is not designed for household use.

The user and distributor should be aware of this fact.

A 급 기기 (업무용 방송통신기자재)

이 기기는 업무용(A 급) 전자파적합기기로서 판매자

또는 사용자는 이 점을 주의하시기 바라며, 가정외의

지역에서 사용하는 것을 목적으로 합니다.

( 대상기종 : Servo Driver )

[Reference translation]

Class A device (broadcast communication device for business use)

This product is an electromagnetic wave generating device for business use (Class A), which is intended non-household use.

The user and distributor should be aware of this fact.

(Applicable model: Servo Driver)

## 9.7 Compliance with the SEMI F47 Standard

- The SEMI F47 standard includes requirements for voltage drops in semiconductor manufacturing equipment.
- The control power supply for the servo driver complies with the SEMI F47 standard.

  The main circuit power supply complies with the SEMI F47 standard at no-load and light loads.

**Precautions**

- This does not apply to single-phase 100 V servo drivers whose control power supply input is DC 24 V.
- Make sure to perform evaluations and confirmation for compatibility with the SEMI F47 standard using the actual equipment.

## 9.8 Harmonic Suppression Measures

- Harmonic suppression measures vary by country. Install in accordance with local regulations.
- Servo drivers for Japan whose input current exceeds 20 A are applicable to the “Guidelines for harmonic suppression measures for users who receive high-voltage or extra-high voltage power”. Calculate the equivalent capacity and harmonic outflow current based on the guidelines. If the harmonic current is found to exceed the limit value predetermined for the contract demand, appropriate measures must be taken. Furthermore, when calculating the equivalent capacity, assume that the conversion factor of the servo driver is $K_{31}$=3.4. (Refer to JEM-TR210 and JEM-TR225*.)

  * These are technical documents issued by JEMA (Japan Electrical Manufacturers' Association).

## 10 SAFETY PRECAUTIONS

This section explains precautions that must be taken to prevent harm to people and damage to property.

# ⚠ SAFETY PRECAUTIONS

The following symbols represent the extent of the harm or damage that may occur through improper use.

| | |
|---|---|
| ⚠ DANGER | This indicates “a significant risk of death or serious injury”. |
| ⚠ CAUTION | This indicates “a risk of minor injury or damage to property”. |

The following symbols indicate how to comply with safety precautions.

| | |
|---|---|
| ⃠ | Something that you must not do. |
| ❗ | Something you must do. |

# ⚠ DANGER

⃠

1. Ensure that the product is used in an environment of pollution degree 2 (places free from dust, metal powders, oil mists, and other foreign objects, as well as liquids such as water, oil, or grinding fluids). Do not store or use near combustible materials or in an environment containing corrosive gases ($H_2S$, $SO_2$, $NO_2$, $Cl_2$, etc.), flammable gases, helium gases, or other gases with low molecular weight.
2. Do not place flammable materials near the motor, servo driver, or regenerative resistor.
3. Do not run the motor using an external power source. If the motor is run externally, it will start acting as an electricity generator. This may cause it to short-circuit during operation of the dynamic brake, which is integrated into the servo driver, resulting in smoke and dust being emitted. Doing so may also cause the dynamic brake to become disconnected, preventing it from functioning.
4. Do not damage the cable, apply undue stress to it, place heavy objects on it, or pinch it.
5. Do not use with the cable submerged in oil or water.
6. Do not install the product next to heating elements such as heaters or large winding resistors. (Protection such as heat shields should be used to protect the product from heating elements.)
7. Do not connect a commercial power supply directly to the motor.
8. Do not use in places susceptible to strong vibrations or impacts. If installing a servo driver near a source of vibration, attach a vibration dampening device to the servo driver mounting surface.
9. Do not touch the rotating parts of the motor during operation.
10. Do not touch the keyway of the motor output shaft with bare hands.
11. Do not put hands inside the servo driver.
12. Do not touch the heat sink and peripheral devices of the motor or servo driver, as they can get very hot.
13. Do not performing wiring or operate the product with wet hands.

# ⚠ DANGER

14 Wiring work should be carried out by an electrical engineer.

15 Motors other than that specified do not include protective devices. Protect them using overcurrent protection devices, ground-fault circuit interrupters, overheating prevention devices, emergency stop devices, etc.

16 Before operating the servo driver following an earthquake, ensure that the servo driver and motor are properly installed and that the machine is safe.

17 After the power supply is switched off, the internal circuit will be charged at high voltage for a period of time. When relocating, wiring, or inspecting the driver, ensure that the power supply input is completely disconnected on the outside of the servo driver and wait at least 15 minutes before carrying out any work.

18 Install and set up the product so that it does not cause fire or personal injury in the event of an earthquake.

19 Install an external emergency stop circuit must be installed to enable the power supply to be immediately disconnected in the event of an emergency.

20 Install the motor, servo driver, and peripheral devices to nonflammable materials such as metal.

21 Ensure that the product is wired correctly and securely. Insecure or incorrect wiring may cause the motor to malfunction or lead to thermal damage. Also, do not allow any conductive materials such as wire debris to enter the servo driver during installation and wiring.

22 Ensure that the cables are securely connected and that energized parts are insulated.

23 Binding and inserting wires into a metal duct will cause the temperature to increase, which will result in reduced wire current capacity and possibly lead to thermal damage. Please consider the current reduction coefficient before deciding on how to wire the product.

24 Make sure to install a molded case circuit breaker (MCCB) to the power supply. Also, make sure to ground the ground terminal or ground wire.

25 Securely tighten the screws for connecting the terminal block, as well as the grounding screw, using the torque indicated in the specification sheet.

26 When constructing a system using safety features, make sure you understand and comply with the relevant safety standards as well as the information in our user manuals or technical reference documents.

# ⚠ CAUTION

27 When transporting the product, do not hold it by the cable or motor shaft.

28 When adjusting the parameters of the servo driver, do not set the gain too high or make extreme modifications to settings simultaneously, as doing so may result in unstable operation.

29 Following a power outage, do not get close to the machine once power is restored, as it may restart suddenly. Settings must be made to ensure personal safety even in event the machine restarts suddenly.

30 Do not approach the motor or the machine when it is running during power-up to ensure safety in the event of an unexpected malfunction.

31 Do not subject the motor shaft to strong shock.

32 Do not turn the servo driver main power supply on and off more frequently than necessary.

33 Do not use the electromagnetic contactor installed on the main power supply side to start or stop the motor.

34 If the motor has a built-in brake, it is for maintenance purposes and should not be used as a stopping (braking) device in order to ensure machine safety.

35 Do not drop or tip over the product during transportation or installation.

36 Do not climb on the motor or place heavy objects on it.

37 Do not cover the servo driver louver or allow any foreign objects to enter.

38 Do not expose the product to direct sunlight. When storing the product, keep it away direct sunlight and store at temperatures and humidity within the specified ranges.

39 Do not attempt to overhaul or modify the motor. Overhauls must be carried out by Panasonic or an authorized dealer.

40 Do not start or stop the device by turning the servo-on command (SRV-ON) on or off as this may damage the dynamic braking circuit incorporated into the servo drive.

# ⚠ CAUTION

41 Use the motor and servo driver in the combination specified by Panasonic. If combining the motor with a different servo driver, make sure to confirm its performance and safety.

42 Failure of the motor or the servo driver it is combined with may result in thermal damage to the motor and may cause smoke and dust to be emitted. Please consider these possibilities when using the device in cleanrooms, etc.

43 Make sure the device is mounted in a manner suitable for the power output and the weight of the unit.

44 Keep the ambient temperature and humidity of the servo driver and motor are within the permitted ambient temperature and humidity ranges.

45 Observe the specified mounting method and orientation.

46 Keep the required distance between the servo driver and the control panel interior or other equipment.

47 If an eyebolt is attached to the motor, it should only be used to transport the motor and not to transport any other equipment. The eyebolt should also not be used if a decelerator, face plate, etc., is attached.

48 Connect the brake control relay in series with the relay that disconnects in the event of an emergency stop.

49 To perform a test run, secure the motor and check its operation with it disconnected from the mechanical system, then mount it onto the machine.

50 Confirm that the input power supply voltage is in line with the servo driver specifications before turning it on and operating.

51 In the event of an alarm, eliminate the cause of the alarm and restart the device.

52 If the motor has a built-in brake, it may not last due to reasons such as its life span or mechanical structure. A stopping device must be installed on the machine side to ensure safety.

53 The motor and servo drive emit heat while the motor is in operation. Ambient temperature may rise abnormally if used in an enclosed area. Take care to ensure that the ambient temperatures of the motor and servo driver are within the operating range.

54 Maintenance and inspections should be performed by a specialist.

55 Make sure to turn off the power supply if the device will not be used for a long period of time.

56 If the dynamic brake built into the servo driver is applied when the device is operating at a high speed, allow a stop time of approximately 10 minutes. Failure to do so may cause the internal circuit to disconnect or the brake to no longer be operable.

57 Secure the cables so that they do not put stress on the connectors, terminal block, or other connections.

- The capacitance of the capacitors of the power supply rectifier circuit will drop over time. To avoid a secondary problem due to a failure, replacement is recommended approx. every five years. Replacement must be carried out by Panasonic or an authorized dealer.
- Be sure to read operating manual (safety guide) included with product before use.

## ■ Servo Driver Ambient Temperature

The life span of the servo driver is largely dependent on the ambient temperature.

Make sure that the ambient temperature within 50 mm of the servo driver does not exceed the operating temperature range.

If it is not possible to measure the temperature from a distance of 50 mm, instead measure at the midpoint of the gap between the obstacle preventing measurement and the servo driver.

**Front view**

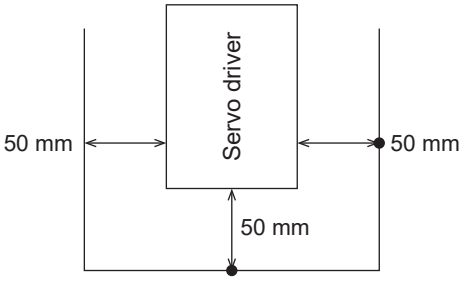


Operating temperature range: 0–55 °C

# 11 Life span

(Life span is not guaranteed.)

## 11.1 Expected Life span of Servo Driver

When used continuously under the following conditions, the expected life span is 28,000 hours.

Definition of life span: "Life span" is defined as the time it takes for the electrolytic capacitor to decrease in capacity by 20% once shipped from the factory.

| | | | |
|---|---|---|---|
| Condition | Input power supply | : | Single-phase AC 100 V 50/60 Hz,<br>Single-phase/3-phase AC 200 V 50/60 Hz<br>3-phase AC 400 V 50/60 Hz |
| | Ambient temperature | : | 55 ℃ |
| | Height above sea level | : | 100 m or less |
| | Output torque: | : | Rated torque constant |
| | Speed | : | Rated speed constant |

The life span varies greatly depending on the conditions of use.

## 11.2 Standard Life span

### ■ Inrush Current Prevention Circuit

The expected life span of the inrush current prevention circuit is approximately 20,000 cycles. Note that criteria may vary depending on environmental and working conditions.

### ■ Cooling Fan

The standard replacement time for the cooling fan is approximately 20,000 hours. Note that criteria may vary depending on environmental and working conditions.

# 12 Warranty

## 12.1 Warranty Period

The warranty period for the product is one year from the date of purchase or one year and six months from the date the product was manufactured.

However, the warranty will be void in any of the following cases, even within the warranty period:

1 If the issue is due to incorrect use or improper repair/modification

2 If the issue is due to the device being dropped after purchase or damaged during transit

3 If the issue is due to the device being used outside of its specifications

4 If the issue is due to a fire, earthquake, lightning strike, wind/water damage, salt damage, voltage abnormalities, other natural disasters, or natural damage

5 If the issue is due to ingress of water, oil, metal fragments, or other foreign objects

6 If parts with a stated standard life span have exceeded their respective life spans

## 12.2 Warranty Coverage

If the product fails during the warranty period for reason in which our company is at fault, we will only replace or repair the defective parts of the device that were provided by us. Please note that our above-stated responsibility is limited to the replacement and repair of the equipment provided by us and that we do not accept any responsibility for damage to your company or any third party that may occur in connection with the failure of the equipment provided by us.

We do not accept responsibility for any equipment failures or damage to your company or any third party in the case of any of the exclusions set forth in 12-1 above or in any of the following cases:

1 If the equipment has been incorporated or used in a way that does not conform to the instructions or precautions set forth in this specifications document

2 If the issue is due to a combination of products that incorporate different equipment

3 If you fail to comply with the requests made to your company in this specifications document

4 If the equipment failure is not caused by our company's actions

## 12.3 Warranty Service

If you require the warranty service (fault cause investigation, repair, etc.), please contact the retailer from which you purchased the product.

If you wish to send it directly to us with the permission of the retailer, please receive a repair/investigation request form from the place of purchase, fill out the necessary information, and send it to our motor service desk along with the product.

As a general rule, you will be responsible for shipping costs.

## 13 Network Security

As you will use this product connected to a network, your attention is called to the following security risks.

1 Leakage or theft of information through this product

2 Unauthorized operation of this product by a malicious third party.

3 Interference of this product by a malicious third party.

It is the customer's responsibility to ensure that sufficient network security measures are taken, including those listed below.

We are not responsible for any damage caused by insufficient network security.

**Precautions**

- This product is to be used in an environment where only a limited number of parties are permitted access to the product.
- This product is not to be installed in locations where the product and its accessories, such as cables, can be easily destroyed.
- This product is to be used on a network that is not connected to the Internet.
- If an external device, such as a computer or tablet, is connected to this product, there are concerns about the effects of computer viruses and unauthorized programs.

  Take appropriate security measures with external devices, such as ensuring that they are checked for computer viruses and that regularly cleaning of such viruses is performed before connecting them.
- If the product is to be disposed of, transferred, repaired, or otherwise transferred to a third party, important information may also be recorded on the product.

  At customer's risk, please handle it with care, such as erasing it.

## 14 Additional Precautions

1 Precautions to be taken when exporting the product or equipment incorporating the product

If the end user or end use of this product is related to the military or weaponry, etc., it may be subject to export restrictions as set forth in the Foreign Exchange and Foreign Trade Act. When exporting, please review and follow the necessary export procedures.

2 This product is designed for general industrial use. This product is not for use in devices critical to human wellbeing or in specialized environments, such as nuclear power control, aerospace equipment, transportation systems, medical equipment, various safety devices, or equipment that requires a high degree of cleanliness.

3 Please ensure that finished equipment complies with standards, laws, and regulations, and confirm that the structure, dimensions, life span, and characteristics of the product match those of your installed equipment and components.

4 Since it is possible, albeit unlikely, that your finished equipment will operate abnormally due to a malfunction of our product (such as due to signal disconnections, signal open phases, or operation performed outside the settings as a result of external noise or static electricity being applied), please put in place failsafes and ensure adequate safety within the operational range of your site.

5 Make sure to follow indications as overloading products can cause loads to collapse.

6 Ensure that the motor shaft is not operated without being electrically grounded, as this may lead to electrolytic corrosion of the motor bearing and increased bearing noise, depending on the machine and the installation environment.

7 A tightening torque appropriate for the product mounting screws should be chosen to avoid loosening or damage, taking into account the strength of the screws used and the material to which they are mounted.

8 Because noise immunity may be affected by wiring conditions (e.g., grounding methods, cable length, signal wire shielding), please confirm the noise immunity of your equipment.

9 When disposing of the servo driver or motor, treat them as industrial waste.

10 When disposing of batteries, insulate them with tape and dispose of them in accordance with local regulations.

11 In order to improve performance, etc., some components of the product might be changed within the acceptable range in the specifications document.

12 Changes to specifications shall be reflected in the specifications document or in a document specified by your company. If this affects the function or characteristics of the product, the specifications will be changed following a test with a prototype.

13 Changes in specifications may affect the price of the product.

14 If you require clarification on something that is not covered by this specifications document, please contact us in advance.

15 In the event of a problem, the two parties shall resolve the issue following consultations as set forth in this specifications document.

16 Depending on the nature of the failure of the product, an amount of smoke equivalent to one cigarette may be emitted.

Please consider these possibilities when using the device in cleanrooms, etc.

17 Do not use detergents containing benzine, thinner, alcohol, acid, or alkaline as this may cause discoloration or damage to the product's exterior.

18 It is the responsibility of the customer to match the linear motor with the driver, and to ensure their safe operation.

19 Do not reverse engineer, decompile, or disassemble this product.

## ■ Disclaimer on servo driver sales described in this specification

- The servo driver stated in this specification acknowledges that the Company sold it with the exchange of “Delivery Specifications”, and we will withhold the handling on the sales channel without the “Delivery Specification” interchange.
- Please understand that we can not accept any responsibility for the servo driver sold in the sales channel without the “Delivery Specifications” exchange.
- We recommend that the “Delivery Specifications” be based on the exchange with the motor manufacturer, and that the motor manufacturer should sell it in combination with our corresponding amp.
- When equipment makers purchase motors and servo drivers separately, we will exchange "Delivery Specifications" with equipment manufacturers.
- In exceptional cases, if it is difficult to exchange the above “Delivery Specifications”, we will exchange the “Delivery Specifications” with the agency and we will handle it under the responsibility of the agency.
- The servo driver described in this specification does not guarantee the operation of the motor to be driven. Also, since we can not confirm matching with the corresponding motor within our company, please confirm matching with the corresponding motor manufacturer, equipment manufacturer, agency.
- In case of occurrence of unexpected troubles in combination with the corresponding motor, we, distributor, motor manufacturer and equipment maker cooperate with each other and deal with each other.

## 15 Model Specifications

| Product number | MADLN01NL<br>MADLT01NM | MADLN11NL<br>MADLT11NM | MADLN05NL<br>MADLT05NM | MADLN15NL<br>MADLT15NM |
|---|---|---|---|---|
| Power supply input | Single-phase 100 V | Single-phase 100 V | Single-phase/3-phase 200 V | Single-phase/3-phase 200 V |
| Maximum output current | 6 A | 8 A | 6 A | 8 A |
| Regenerative resistor | External | External | External | External |
| Auto-gain tuning function | Provided | Provided | Provided | Provided |
| Dynamic brake function | Provided | Provided | Provided | Provided |
| Operating ambient temperature | 0-55 ºC | 0-55 ºC | 0-55 ºC | 0-55 ºC |
| Control power supply cable | HVSF 0.75 $mm^2$ | HVSF 0.75 $mm^2$ | HVSF 0.75 $mm^2$ | HVSF 0.75 $mm^2$ |
| | AWG18 | AWG18 | AWG18 | AWG18 |
| Main power supply cable | HVSF 0.75-2.0 $mm^2$ | HVSF 0.75-2.0 $mm^2$ | HVSF 0.75-2.0 $mm^2$ | HVSF 0.75-2.0 $mm^2$ |
| | AWG14-18 | AWG14-18 | AWG14-18 | AWG14-18 |
| Ground cable | HVSF 2.0 $mm^2$ | HVSF 2.0 $mm^2$ | HVSF 2.0 $mm^2$ | HVSF 2.0 $mm^2$ |
| | AWG14 | AWG14 | AWG14 | AWG14 |
| Motor cable | HVSF 0.75-2.0 $mm^2$ | HVSF 0.75-2.0 $mm^2$ | HVSF 0.75-2.0 $mm^2$ | HVSF 0.75-2.0 $mm^2$ |
| | AWG14-18 | AWG14-18 | AWG14-18 | AWG14-18 |
| Inrush current (main power supply) (*1) | Max. 7 A | Max. 7 A | Max. 14 A | Max. 14 A |
| Inrush current (control power supply) (*1) | Max. 7 A | Max. 7 A | Max. 14 A | Max. 14 A |
| Product weight | Approx. 0.8 kg | Approx. 0.8 kg | Approx. 0.8 kg | Approx. 0.8 kg |
| External size | Size A | Size A | Size A | Size A |

*1 When the product power supply input voltage is the 100 V specification, the current is the value calculated with the voltage as 100 V. Likewise, the current is the value calculated with the voltage as 200 V when the product power input voltage is the 200 V specification.

| Product number | MBDLN21NL<br>MBDLT21NM | MBDLN25NL<br>MBDLT25NM | MCDLN31NL<br>MCDLT31NM | MCDLN35NL<br>MCDLT35NM |
|---|---|---|---|---|
| Power supply input | Single-phase 100 V | Single-phase/3-phase 200 V | Single-phase 100 V | Single-phase/3-phase 200 V |
| Maximum output current | 12 A | 12 A | 22 A | 22 A |
| Regenerative resistor | External | External | Built-in | Built-in |
| Auto-gain tuning function | Provided | Provided | Provided | Provided |
| Dynamic brake function | Provided | Provided | Provided | Provided |
| Operating ambient temperature | 0-55 ºC | 0-55 ºC | 0-55 ºC | 0-55 ºC |
| Control power supply cable | HVSF 0.75 $mm^2$ | HVSF 0.75 $mm^2$ | HVSF 0.75 $mm^2$ | HVSF 0.75 $mm^2$ |
| | AWG18 | AWG18 | AWG18 | AWG18 |
| Main power supply cable | HVSF 0.75-2.0 $mm^2$ | HVSF 0.75-2.0 $mm^2$ | HVSF 0.75-2.0 $mm^2$ | HVSF 0.75-2.0 $mm^2$ |
| | AWG14-18 | AWG14-18 | AWG14-18 | AWG14-18 |
| Ground cable | HVSF 2.0 $mm^2$ | HVSF 2.0 $mm^2$ | HVSF 2.0 $mm^2$ | HVSF 2.0 $mm^2$ |
| | AWG14 | AWG14 | AWG14 | AWG14 |
| Motor cable | HVSF 0.75-2.0 $mm^2$ | HVSF 0.75-2.0 $mm^2$ | HVSF 0.75-2.0 $mm^2$ | HVSF 0.75-2.0 $mm^2$ |
| | AWG14-18 | AWG14-18 | AWG14-18 | AWG14-18 |
| Inrush current (main power supply) (*1) | Max. 7 A | Max. 14 A | Max. 15 A | Max. 29 A |
| Inrush current (control power supply) (*1) | Max. 7 A | Max. 14 A | Max. 7 A | Max. 14 A |
| Product weight | Approx. 1.0 kg | Approx. 1.0 kg | Approx. 1.6 kg | Approx. 1.6 kg |
| External size | Size B | Size B | Size C | Size C |

*1 When the product power supply input voltage is the 100 V specification, the current is the value calculated with the voltage as 100 V. Likewise, the current is the value calculated with the voltage as 200 V when the product power input voltage is the 200 V specification.

| Product number | MDDLN45NL<br>MDDLT45NM | MDDLN55NL<br>MDDLT55NM | MEDLN83NL<br>MEDLT83NM | MEDLN93NL<br>MEDLT93NM |
|---|---|---|---|---|
| Power supply input | Single-phase/3-phase 200 V | Single-phase/3-phase 200 V | 3-phase 200 V | 3-phase 200 V |
| Maximum output current | 24 A | 40 A | 60 A | 80 A |
| Regenerative resistor | Built-in | Built-in | Built-in | Built-in |
| Auto-gain tuning function | Provided | Provided | Provided | Provided |
| Dynamic brake function | Provided | Provided | Provided | Provided |
| Operating ambient temperature | 0-55 ºC | 0-55 ºC | 0-55 ºC | 0-55 ºC |
| Control power supply cable | HVSF 0.75 $mm^2$ | HVSF 0.75 $mm^2$ | HVSF 0.75 $mm^2$ | HVSF 0.75 $mm^2$ |
| | AWG18 | AWG18 | AWG18 | AWG18 |
| Main power supply cable | HVSF 2.0 $mm^2$ | HVSF 2.0 $mm^2$ | HVSF 2.0 $mm^2$ | HVSF 2.0 $mm^2$ |
| | AWG14 | AWG14 | AWG14 | AWG14 |
| Ground cable | HVSF 2.0 $mm^2$ | HVSF 2.0 $mm^2$ | HVSF 2.0 $mm^2$ | HVSF 2.0 $mm^2$ |
| | AWG14 | AWG14 | AWG14 | AWG14 |
| Motor cable | HVSF 2.0$mm^2$ | HVSF 2.0 $mm^2$ | HVSF 2.0 $mm^2$ | HVSF 3.5 $mm^2$ |
| | AWG14 | AWG14 | AWG14 | AWG12 |
| Inrush current (main power supply) (*1) | Max. 29 A | Max. 29 A | Max. 29 A | Max. 29 A |
| Inrush current (control power supply) (*1) | Max. 14 A | Max. 14 A | Max. 14 A | Max. 14 A |
| Product weight | Approx. 2.1 kg | Approx. 2.1 kg | Approx. 2.7 kg | Approx. 2.7 kg |
| External size | Size D | Size D | Size E | Size E |

*1 When the product power supply input voltage is the 100 V specification, the current is the value calculated with the voltage as 100 V. Likewise, the current is the value calculated with the voltage as 200 V when the product power input voltage is the 200 V specification.

| Product number | MFDLNA3NL<br>MFDLTA3NM | MFDLNB3NL<br>MFDLTB3NM |
|---|---|---|
| Power supply input | 3-phase 200 V | 3-phase 200 V |
| Maximum output current | 100 A | 120 A |
| Regenerative resistor | Built-in | Built-in |
| Auto-gain tuning function | Provided | Provided |
| Dynamic brake function | Provided | Provided |
| Operating ambient temperature | 0-55 ºC | 0-55 ºC |
| Control power supply cable | HVSF 0.75 $mm^2$ | HVSF 0.75 $mm^2$ |
| | AWG18 | AWG18 |
| Main power supply cable | HVSF 3.5 $mm^2$ | HVSF 3.5 $mm^2$ |
| | AWG12 | AWG12 |
| Ground cable | HVSF 3.5 $mm^2$ | HVSF 3.5 $mm^2$ |
| | AWG12 | AWG12 |
| Motor cable | HVSF 3.5 $mm^2$ | HVSF 3.5 $mm^2$ |
| | AWG12 | AWG12 |
| Inrush current (main power supply) (*1) | Max. 22 A | Max. 22 A |
| Inrush current (control power supply) (*1) | Max. 14 A | Max. 14 A |
| Product weight | Approx. 5.2 kg | Approx. 5.2 kg |
| External size | Size F | Size F |

*1 When the product power supply input voltage is the 100 V specification, the current is the value calculated with the voltage as 100 V. Likewise, the current is the value calculated with the voltage as 200 V when the product power input voltage is the 200 V specification.

| Product number | MGDLTC3NM | MHDLTE3NM | MHDLTF3NM |
|---|---|---|---|
| Power supply input | 3-phase 200 V | 3-phase 200 V | 3-phase 200 V |
| Maximum output current | 165 A | 240 A | 360 A |
| Regenerative resistor | External | External | External |
| Auto-gain tuning function | Provided | Provided | Provided |
| Dynamic brake function | Provided | None | None |
| Operating ambient temperature | 0-55 ºC | 0-55 ºC | 0-55 ºC |
| Control power supply cable | HVSF 0.75 $mm^2$ | HVSF 0.75 $mm^2$ | HVSF 0.75 $mm^2$ |
| | AWG18 | AWG18 | AWG18 |
| Main power supply cable | HVSF 8.0 $mm^2$ | HVSF 22 $mm^2$ | HVSF 38 $mm^2$ |
| | AWG8 | AWG4 | AWG2 |
| Ground cable | HVSF 8.0 $mm^2$ | HVSF 22 $mm^2$ | HVSF 38 $mm^2$ |
| | AWG8 | AWG4 | AWG2 |
| Motor cable | HVSF 14 $mm^2$ | HVSF 22 $mm^2$ | HVSF 38 $mm^2$ |
| | AWG6 | AWG4 | AWG2 |
| Inrush current (main power supply) (*1) | Max. 66 A | Max. 66 A | Max. 66 A |
| Inrush current (control power supply) (*1) | Max. 15 A | Max. 15 A | Max. 15 A |
| Product weight | Approx. 8.2 kg | Approx. 14.2 kg | Approx. 15.2 kg |
| External size | Size G | Size H | Size H |

*1 When the product power supply input voltage is the 100 V specification, the current is the value calculated with the voltage as 100 V. Likewise, the current is the value calculated with the voltage as 200 V when the product power input voltage is the 200 V specification.

| Product number | MDDLT44NM | MDDLT54NM | MDDLT64NM | MEDLT84NM |
|---|---|---|---|---|
| Power supply input | 3-phase 400 V | 3-phase 400 V | 3-phase 400 V | 3-phase 400 V |
| Maximum output current | 6.5 A | 13 A | 20 A | 28 A |
| Regenerative resistor | Built-in | Built-in | Built-in | Built-in |
| Auto-gain tuning function | Provided | Provided | Provided | Provided |
| Dynamic brake function | Provided | Provided | Provided | Provided |
| Operating ambient temperature | 0-55 ºC | 0-55 ºC | 0-55 ºC | 0-55 ºC |
| Control power supply cable | HVSF 0.52 $mm^2$ | HVSF 0.52 $mm^2$ | HVSF 0.52 $mm^2$ | HVSF 0.52 $mm^2$ |
| | AWG20 | AWG20 | AWG20 | AWG20 |
| Main power supply cable | HVSF 2.0 $mm^2$ | HVSF 2.0 $mm^2$ | HVSF 2.0 $mm^2$ | HVSF 2.0 $mm^2$ |
| | AWG14 | AWG14 | AWG14 | AWG14 |
| Ground cable | HVSF 2.0 $mm^2$ | HVSF 2.0 $mm^2$ | HVSF 2.0 $mm^2$ | HVSF 2.0 $mm^2$ |
| | AWG14 | AWG14 | AWG14 | AWG14 |
| Motor cable | HVSF 2.0$mm^2$ | HVSF 2.0$mm^2$ | HVSF 2.0 $mm^2$ | HVSF 2.0 $mm^2$ |
| | AWG14 | AWG14 | AWG14 | AWG14 |
| Inrush current (main power supply) (*1) | Max. 30 A | Max. 30 A | Max. 30 A | Max. 30 A |
| Inrush current (control power supply) (*1) | Max. 48 A | Max. 48 A | Max. 48 A | Max. 48 A |
| Product weight | Approx. 2.1 kg | Approx. 2.1 kg | Approx. 2.1 kg | Approx. 2.7 kg |
| External size | Size D | Size D | Size D | Size E |

*1 When the product power input voltage is the 400 V specification, the current is the value calculated with the voltage as 400 V (control power supply: DC 24 V).

| Product number | MFDLTA4NM | MFDLTB4NM |
|---|---|---|
| Power supply input | 3-phase 400 V | 3-phase 400 V |
| Maximum output current | 40 A | 60 A |
| Regenerative resistor | Built-in | Built-in |
| Auto-gain tuning function | Provided | Provided |
| Dynamic brake function | Provided | Provided |
| Operating ambient temperature | 0-55 ºC | 0-55 ºC |
| Control power supply cable | HVSF 0.52 $mm^2$ | HVSF 0.52 $mm^2$ |
| | AWG20 | AWG20 |
| Main power supply cable | HVSF 3.5 $mm^2$ | HVSF 3.5 $mm^2$ |
| | AWG12 | AWG12 |
| Ground cable | HVSF 3.5 $mm^2$ | HVSF 3.5 $mm^2$ |
| | AWG12 | AWG12 |
| Motor cable | HVSF 3.5 $mm^2$ | HVSF 3.5 $mm^2$ |
| | AWG12 | AWG12 |
| Inrush current (main power supply) (*1) | Max. 30 A | Max. 30 A |
| Inrush current (control power supply) (*1) | Max. 48 A | Max. 48 A |
| Product weight | Approx. 5.2 kg | Approx. 5.2 kg |
| External size | Size F | Size F |

*1 When the product power input voltage is the 400 V specification, the current is the value calculated with the voltage as 400 V (control power supply: DC 24 V).

| Product number | MGDLTC4NM | MHDLTE4NM | MHDLTF4NM |
|---|---|---|---|
| Power supply input | 3-phase 400 V | 3-phase 400 V | 3-phase 400 V |
| Maximum output current | 83 A | 120 A | 160 A |
| Regenerative resistor | External | External | External |
| Auto-gain tuning function | Provided | Provided | Provided |
| Dynamic brake function | Provided | None | None |
| Operating ambient temperature | 0-55 ºC | 0-55 ºC | 0-55 ºC |
| Control power supply cable | HVSF 0.75 $mm^2$ | HVSF 0.75 $mm^2$ | HVSF 0.75 $mm^2$ |
| | AWG18 | AWG18 | AWG18 |
| Main power supply cable | HVSF 5.5 $mm^2$ | HVSF 14 $mm^2$ | HVSF 22 $mm^2$ |
| | AWG10 | AWG6 | AWG4 |
| Ground cable | HVSF 5.5 $mm^2$ | HVSF 14 $mm^2$ | HVSF 22 $mm^2$ |
| | AWG10 | AWG6 | AWG4 |
| Motor cable | HVSF 5.5 $mm^2$ | HVSF 14 $mm^2$ | HVSF 22 $mm^2$ |
| | AWG10 | AWG6 | AWG4 |
| Inrush current (main power supply) (*1) | Max. 32 A | Max. 32 A | Max. 32 A |
| Inrush current (control power supply) (*1) | Max. 48 A | Max. 48 A | Max. 48 A |
| Product weight | Approx. 8.2 kg | Approx. 14.2 kg | Approx. 15.2 kg |
| External size | Size G | Size H | Size H |

*1 When the product power input voltage is the 400 V specification, the current is the value calculated with the voltage as 400 V (control power supply: DC 24 V).

## Appendix List of Default Parameters

The following pages show default parameters set when the servo driver is shipped from the factory.

Operation must be confirmed for each customer machine before use and the optimal parameters set.

■Default value of the parameters (1/11)



| PARAMETER | MODEL | MINAS-A6N (NL/NM) series common |
|---|---|---|

| Cate | Pr. | Parameter | Default value |
|---|---|---|---|
| 0 | 0 | Operation direction setup | 1 |
| | 1 | For manufacturer's use | 0 |
| | 2 | Real-time auto-gain tuning setup | 1 |
| | 3 | Selection of machine stiffness at real-time auto-gain tuning | Size A-C 13<br>Size D-H 11 |
| | 4 | Inertia ratio | 250 |
| | 5 | No use | - |
| | 6 | No use | - |
| | 7 | No use | - |
| | 8 | For manufacturer's use | 0 |
| | 9 | Numerator of electronic gear | 1 |
| | 10 | Denominator of electronic gear | 1 |
| | 11 | Numerator of pulse output division | 2500 |
| | 12 | Reversal of pulse output logic/output source selection | 0 |
| | 13 *2 | 1st torque limit | 500 |
| | 14 | Position deviation excess setup | 83886080 |
| | 15 | For manufacturer's use | 1 |
| | 16 | External regenerative resistor setup | Size A,B,G,H 3<br>Size C-F 0 |
| | 17 | Load factor of external regenerative resistor selection | 0 |
| | 18 | For manufacturer's use | 0 |
| | 19 | No use | - |
| | 20 | No use | - |
| | 21 | For manufacturer's use | 0 |

*1 When checking directly value of parameter-file with a text data etc., it does not show the decimal point. Ex) Pr6.24 Load change compensation filter ･･･ Value of Panaterm：0.53 / Value of parameter-file：53

* Parameter names in the table correspond to the DD motor (rotary type). For parameter names and setting values corresponding to linear motors, refer to the technical document.

■Default value of the parameters (2/11)



| PARAMETER | MODEL | MINAS-A6N (NL/NM) series common |
|---|---|---|

| Cate | Pr. | Parameter | Default value |
|---|---|---|---|
| 1 | 0 *1 | 1st gain of position loop | Size A-C 48.0<br>Size D-H 32.0 |
| | 1 *1 | 1st gain of velocity loop | Size A-C 27.0<br>Size D-H 18.0 |
| | 2 *1 | 1st time constant of velocity loop integration | Size A-C 21.0<br>Size D-H 31.0 |
| | 3 | 1st filter of velocity detection | 0 |
| | 4 *1 | 1st time constant of torque filter | Size A-C 0.84<br>Size D-H 1.26 |
| | 5 *1 | 2nd gain of position loop | Size A-C 48.0<br>Size D-H 32.0 |
| | 6 *1 | 2nd gain of velocity loop | Size A-C 27.0<br>Size D-H 18.0 |
| | 7 *1 | 2nd time constant of velocity loop integration | Size A-C 21.0<br>Size D-H 31.0 |
| | 8 | 2nd filter of velocity detection | 0 |
| | 9 *1 | 2nd time constant of torque filter | Size A-C 0.84<br>Size D-H 1.26 |
| | 10 *1 | Velocity feed forward gain | 100.0 |
| | 11 *1 | Velocity feed forward filter | 0 |
| | 12 *1 | Torque feed forward gain | 100.0 |
| | 13 *1 | Torque feed forward filter | 0 |
| | 14 | 2nd gain setup | 1 |
| | 15 | Mode of position control switching | 0 |
| | 16 *1 | Delay time of position control switching | 1.0 |
| | 17 | Level of position control switching | 0 |
| | 18 | Hysteresis at position control switching | 0 |
| | 19 *1 | Position gain switching time | 1.0 |
| | 20 | Mode of velocity control switching | 0 |
| | 21 *1 | Delay time of velocity control switching | 0.0 |
| | 22 | Level of velocity control switching | 0 |
| | 23 | Hysteresis at velocity control switching | 0 |
| | 24 | Mode of torque control switching | 0 |
| | 25 *1 | Delay time of torque control switching | 0 |
| | 26 | Level of torque control switching | 0 |
| | 27 | Hysteresis at torque control switching | 0 |
| | 28 | For Manufacturer use | 0 |
| | 29 | For Manufacturer use | 0 |
| | 30 | For Manufacturer use | 0 |

| Cate | Pr. | Parameter | Default value |
|---|---|---|---|
| 1 | 31 | For Manufacturer use | 0 |
| | 32 | For Manufacturer use | 0 |
| | 33 | For Manufacturer use | 0 |
| | 34 | For Manufacturer use | 0 |
| | 35 | For Manufacturer use | 0 |
| | 36 | For Manufacturer use | 0 |
| | 37 | For Manufacturer use | 0 |
| | 38 | For Manufacturer use | 0 |
| | 39 | For Manufacturer use | 0 |
| | 40 | For Manufacturer use | 0 |
| | 41 | For Manufacturer use | 0 |
| | 42 | For Manufacturer use | 0 |
| | 43 | For Manufacturer use | 0 |
| | 44 | For Manufacturer use | 0 |
| | 45 | For Manufacturer use | 0 |
| | 46 | For Manufacturer use | 0 |
| | 47 | For Manufacturer use | 0 |
| | 48 | For Manufacturer use | 0 |
| | 49 | For Manufacturer use | 0 |
| | 50 | For Manufacturer use | 0 |
| | 51 | For Manufacturer use | 0 |
| | 52 | For Manufacturer use | 0 |
| | 53 | For Manufacturer use | 0 |
| | 54 | For Manufacturer use | 0 |
| | 55 | For Manufacturer use | 0 |
| | 56 | For Manufacturer use | 0 |
| | 57 | For Manufacturer use | 0 |
| | 58 | For Manufacturer use | 0 |
| | 59 | For Manufacturer use | 0 |
| | 60 | For Manufacturer use | 0 |
| | 61 | For Manufacturer use | 0 |

| Cate | Pr. | Parameter | Default value |
|---|---|---|---|
| 1 | 62 | For Manufacturer use | 0 |
| | 63 | For Manufacturer use | 0 |
| | 64 | For Manufacturer use | 0 |
| | 65 | For Manufacturer use | 0 |
| | 66 | For Manufacturer use | 0 |
| | 67 | For Manufacturer use | 0 |
| | 68 | For Manufacturer use | 0 |
| | 69 | For Manufacturer use | 0 |
| | 70 | For Manufacturer use | 0 |
| | 71 | For Manufacturer use | 0 |
| | 72 | For Manufacturer use | 0 |
| | 73 | For Manufacturer use | 0 |
| | 74 | For Manufacturer use | 0 |
| | 75 | For Manufacturer use | 0 |
| | 76 | For Manufacturer use | 0 |
| | 77 | For Manufacturer use | 0 |
| | 78 | For Manufacturer use | 0 |

| Cate | Pr. | Parameter | Default value |
|---|---|---|---|

| Cate | Pr. | Parameter | Default value |
|---|---|---|---|

*1 When checking directly value of parameter-file with a text data etc., it does not show the decimal point. Ex) Pr6.24 Load change compensation filter ･･･ Value of Panaterm：0.53 / Value of parameter-file：53

* Parameter names in the table correspond to the DD motor (rotary type). For parameter names and setting values corresponding to linear motors, refer to the technical document.

■Default value of the parameters (3/11)



| PARAMETER | MODEL | MINAS-A6N (NL/NM) series common |
|---|---|---|

| Cate | Pr. | Parameter | Default value |
|---|---|---|---|
| 2 | 0 | Adaptive filter mode setup | 0 |
| | 1 | 1st notch frequency | 5000 |
| | 2 | 1st notchwidth selection | 2 |
| | 3 | 1st notch depth selection | 0 |
| | 4 | 2nd notch frequency | 5000 |
| | 5 | 2nd notch width selection | 2 |
| | 6 | 2nd notch depth selection | 0 |
| | 7 | 3rd notch frequency | 5000 |
| | 8 | 3rd notch width selection | 2 |
| | 9 | 3rd notch depth selection | 0 |
| | 10 | 4th notch frequency | 5000 |
| | 11 | 4th notch width selection | 2 |
| | 12 | 4th notch depth selection | 0 |
| | 13 | Selection of damping filter switching | 0 |
| | 14 *1 | 1st damping frequency | 0 |
| | 15 *1 | 1st damping filter setup | 0 |
| | 16 *1 | 2nd damping frequency | 0 |
| | 17 *1 | 2nd damping filter setup | 0 |
| | 18 *1 | 3rd damping frequency | 0 |
| | 19 *1 | 3rd damping filter setup | 0 |
| | 20 *1 | 4th damping frequency | 0 |
| | 21 *1 | 4th damping filter setup | 0 |
| | 22 *1 | Command smoothing filter | Size A-C 9.2<br>Size D-H 13.9 |
| | 23 *1 | Command FIR filter | 1.0 |
| | 24 | 5th notch frequency | 5000 |
| | 25 | 5th notch width selection | 2 |
| | 26 | 5th notch depth selection | 0 |
| | 27 | 1st damping width setting | 0 |
| | 28 | 2nd damping width setting | 0 |
| | 29 | 3rd damping width setting | 0 |
| | 30 | 4th damping width setting | 0 |

| Cate | Pr. | Parameter | Default value |
|---|---|---|---|
| 2 | 31 | For Manufacturer use | 0 |
| | 32 | For Manufacturer use | 0 |
| | 33 | For Manufacturer use | 0 |
| | 34 | For Manufacturer use | 0 |
| | 35 | For Manufacturer use | 0 |
| | 36 | For Manufacturer use | 0 |
| | 37 | For Manufacturer use | 0 |

*1 When checking directly value of parameter-file with a text data etc., it does not show the decimal point. Ex) Pr6.24 Load change compensation filter ･･･ Value of Panaterm：0.53 / Value of parameter-file：53

* Parameter names in the table correspond to the DD motor (rotary type). For parameter names and setting values corresponding to linear motors, refer to the technical document.

■Default value of the parameters (4/11)

| PARAMETER | MODEL | MINAS-A6N (NL/NM) series common |
|---|---|---|

| Cate | Pr. | Parameter | Default value | Cate | Pr. | Parameter | Default value | Cate | Pr. | Parameter | Default value | Cate | Pr. | Parameter | Default value | Cate | Pr. | Parameter | Default value |
|---|---|---|---|---|---|---|---|---|---|---|---|---|---|---|---|---|---|---|---|
| 3 | 0 | No use | - | 3 | 31 | No use | - | | | | | | | | | | | | |
| | 1 | No use | - | | 32 | For Manufacturer use | 0 | | | | | | | | | | | | |
| | 2 | No use | - | | | | | | | | | | | | | | | | |
| | 3 | No use | - | | | | | | | | | | | | | | | | |
| | 4 | For Manufacturer use | 0 | | | | | | | | | | | | | | | | |
| | 5 | For Manufacturer use | 0 | | | | | | | | | | | | | | | | |
| | 6 | No use | - | | | | | | | | | | | | | | | | |
| | 7 | No use | - | | | | | | | | | | | | | | | | |
| | 8 | No use | - | | | | | | | | | | | | | | | | |
| | 9 | No use | - | | | | | | | | | | | | | | | | |
| | 10 | No use | - | | | | | | | | | | | | | | | | |
| | 11 | No use | - | | | | | | | | | | | | | | | | |
| | 12 | Acceleration time setup | 0 | | | | | | | | | | | | | | | | |
| | 13 | Deceleration time setup | 0 | | | | | | | | | | | | | | | | |
| | 14 | Sigmoid acceleration/ deceleration time setup | 0 | | | | | | | | | | | | | | | | |
| | 15 | No use | - | | | | | | | | | | | | | | | | |
| | 16 | No use | - | | | | | | | | | | | | | | | | |
| | 17 | Selection of speed limit | 0 | | | | | | | | | | | | | | | | |
| | 18 | No use | - | | | | | | | | | | | | | | | | |
| | 19 | No use | - | | | | | | | | | | | | | | | | |
| | 20 | No use | - | | | | | | | | | | | | | | | | |
| | 21 | Speed limit value 1 | 0 | | | | | | | | | | | | | | | | |
| | 22 | Speed limit value 2 | 0 | | | | | | | | | | | | | | | | |
| | 23 | External scale selection | 0 | | | | | | | | | | | | | | | | |
| | 24 | For Manufacturer use | 0 | | | | | | | | | | | | | | | | |
| | 25 | For Manufacturer use | 1 | | | | | | | | | | | | | | | | |
| | 26 | Reversal of direction of feedback scale | 0 | | | | | | | | | | | | | | | | |
| | 27 | Feedback scale Z phase disconnection detection disable | 0 | | | | | | | | | | | | | | | | |
| | 28 | For Manufacturer use | 1 | | | | | | | | | | | | | | | | |
| | 29 | For Manufacturer use | 0 | | | | | | | | | | | | | | | | |
| | 30 | No use | - | | | | | | | | | | | | | | | | |

*1 When checking directly value of parameter-file with a text data etc., it does not show the decimal point. Ex) Pr6.24 Load change compensation filter ･･･ Value of Panaterm：0.53 / Value of parameter-file：53

* Parameter names in the table correspond to the DD motor (rotary type). For parameter names and setting values corresponding to linear motors, refer to the technical document.

■Default value of the parameters (5/11)

| PARAMETER | MODEL | MINAS-A6N (NL/NM) series common |
|---|---|---|

| Cate | Pr. | Parameter | Default value |
|---|---|---|---|
| 4 | 0 | SI1 input selection | 3289650 |
| | 1 | SI2 input selection | 8487297 |
| | 2 | SI3 input selection | 8553090 |
| | 3 | SI4 input selection | 3026478 |
| | 4 | SI5 input selection | 2236962 |
| | 5 | SI6 input selection | 2171169 |
| | 6 | SI7 input selection | 2829099 |
| | 7 | SI8 input selection | 3223857 |
| | 8 | No use | - |
| | 9 | No use | - |
| | 10 | SO1 output selection | 197379 |
| | 11 | SO2 output selection | 1052688 |
| | 12 | SO3 output selection | 65793 |
| | 13 | No use | - |
| | 14 | No use | - |
| | 15 | No use | - |
| | 16 | Type of analog monitor 1 | 0 |
| | 17 | Analog monitor 1 output gain | 0 |
| | 18 | Type of analog monitor 2 | 4 |
| | 19 | Analog monitor 2 output gain | 0 |
| | 20 | No use | - |
| | 21 | Analog monitor output setup | 0 |
| | 22 | For Manufacturer use | 0 |
| | 23 | For Manufacturer use | 0 |
| | 24 | For Manufacturer use | 0 |
| | 25 | No use | - |
| | 26 | No use | - |
| | 27 | No use | - |
| | 28 | No use | - |
| | 29 | No use | - |
| | 30 | No use | - |

| Cate | Pr. | Parameter | Default value |
|---|---|---|---|
| 4 | 31 | Positioning complete (In-position) range | 10 |
| | 32 | Positioning complete (In-position) output setup | 0 |
| | 33 | INP hold time | 0 |
| | 34 | Zero-speed | 50 |
| | 35 | Speed coincidence range | 50 |
| | 36 | At-speed (Speed arrival) | 1000 |
| | 37 | Mechanical brake action at stalling setup | 0 |
| | 38 | Mechanical brake action at running setup | 0 |
| | 39 | Brake release speed setup | 30 |
| | 40 | Selection of alarm output 1 | 0 |
| | 41 | Selection of alarm output 2 | 0 |
| | 42 | 2nd Positioning complete (In-position) range | 10 |
| | 43 | No use | - |
| | 44 *1 | Position comparison output pulse width setting | 0.0 |
| | 45 | Position comparison output polarity selection | 0 |
| | 46 | No use | - |
| | 47 | Pulse output selection | 0 |
| | 48 | Position comparison value 1 | 0 |
| | 49 | Position comparison value 2 | 0 |
| | 50 | Position comparison value 3 | 0 |
| | 51 | Position comparison value 4 | 0 |
| | 52 | Position comparison value 5 | 0 |
| | 53 | Position comparison value 6 | 0 |
| | 54 | Position comparison value 7 | 0 |
| | 55 | Position comparison value 8 | 0 |
| | 56 *1 | Position comparison output delay compensation amount | 0 |
| | 57 | Position comparison output assignment setting | 0 |

| Cate | Pr. | Parameter | Default value |
|---|---|---|---|
| | | | |

| Cate | Pr. | Parameter | Default value |
|---|---|---|---|
| | | | |

| Cate | Pr. | Parameter | Default value |
|---|---|---|---|
| | | | |

*1 When checking directly value of parameter-file with a text data etc., it does not show the decimal point. Ex) Pr6.24 Load change compensation filter ･･･ Value of Panaterm：0.53 / Value of parameter-file：53

* Parameter names in the table correspond to the DD motor (rotary type). For parameter names and setting values corresponding to linear motors, refer to the technical document.

■Default value of the parameters (6/11)



| PARAMETER | MODEL | MINAS-A6N (NL/NM) series common |
|---|---|---|

| Cate | Pr. | Parameter | Default value |
|---|---|---|---|
| 5 | 0 | No use | - |
| | 1 | No use | - |
| | 2 | No use | - |
| | 3 | Denominator of pulse output division | 0 |
| | 4 | Over-travel inhibit input setup | 1 |
| | 5 | Sequence at over-travel inhibit | 0 |
| | 6 | Sequence at Servo-off | 0 |
| | 7 | Sequence at main power off | 0 |
| | 8 | LV trip selection at main power off | 1 |
| | 9 | Detection time of main power off | 70 |
| | 10 | Sequence at alarm | 0 |
| | 11 | Torque setup for emergency stop | 0 |
| | 12 | Over-load level setup | 0 |
| | 13 | Over-speed level setup | 0 |
| | 14 *1 | Motor working range setup | 1.0 |
| | 15 | Control input signal reading setup | 0 |
| | 16 | No use | - |
| | 17 | No use | - |
| | 18 | No use | - |
| | 19 | No use | - |
| | 20 | Position setup unit select | 0 |
| | 21 | Selection of torque limit | 1 |
| | 22 *2 | 2nd torque limit | 500 |
| | 23 | Torque limit switching setup 1 | 0 |
| | 24 | Torque limit switching setup 2 | 0 |
| | 25 *2 | Positive direction torque limit | 500 |
| | 26 *2 | Negative direction torque limit | 500 |
| | 27 | No use | - |
| | 28 | No use | - |
| | 29 | For Manufacturer use | 2 |
| | 30 | No use | - |

| Cate | Pr. | Parameter | Default value |
|---|---|---|---|
| 5 | 31 | USB axis address | 1 |
| | 32 | No use | - |
| | 33 | Pulse regenerative output limit setup | 0 |
| | 34 | For Manufacturer use | 4 |
| | 35 | No use | - |
| | 36 | For Manufacturer use | 0 |
| | 37 | No use | - |
| | 38 | No use | - |
| | 39 | No use | - |
| | 40 | No use | - |
| | 41 | No use | - |
| | 42 | No use | - |
| | 43 | No use | - |
| | 44 | No use | - |
| | 45 *1 | Quadrant glitch positive-direction compensation value | 0 |
| | 46 *1 | Quadrant glitch negative-direction compensation value | 0 |
| | 47 | Quadrant glitch compensation delay time | 0 |
| | 48 *1 | Quadrant glitch compensation filter setting L | 0.00 |
| | 49 *1 | Quadrant glitch compensation filter setting H | 0 |
| | 50 | For Manufacturer use | 0 |
| | 51 | For Manufacturer use | 0 |
| | 52 | For Manufacturer use | 0 |
| | 53 | For Manufacturer use | 0 |
| | 54 | For Manufacturer use | 0 |
| | 55 | For Manufacturer use | 0 |
| | 56 | Slow stop deceleration time setting | 0 |
| | 57 | Slow stop S-shape acceleration and deceleration setting | 0 |
| | 58 | No use | - |
| | 59 | No use | - |
| | 60 | No use | - |
| | 61 | No use | - |

| Cate | Pr. | Parameter | Default value |
|---|---|---|---|
| 5 | 62 | No use | - |
| | 63 | No use | - |
| | 64 | No use | - |
| | 65 | No use | - |
| | 66 *1 | Deterioration diagnosis convergence judgment time | 0 |
| | 67 | Deterioration diagnosis inertia ratio upper limit | 0 |
| | 68 | Deterioration diagnosis inertia ratio lower limit | 0 |
| | 69 *1 | Deterioration diagnosis unbalanced load upper limit | 0 |
| | 70 *1 | Deterioration diagnosis unbalanced load lower limit | 0 |
| | 71 *1 | Deterioration diagnosis dynamic friction upper limit | 0 |
| | 72 *1 | Deterioration diagnosis dynamic friction lower limit | 0 |
| | 73 *1 | Deterioration diagnosis viscous friction upper limit | 0 |
| | 74 *1 | Deterioration diagnosis viscous friction lower limit | 0 |
| | 75 | Deterioration diagnosis velocity setting | 0 |
| | 76 | Deterioration diagnosis torque average time | 0 |
| | 77 *1 | Deterioration diagnosis torque upper limit | 0 |
| | 78 *1 | Deterioration diagnosis torque lower limit | 0 |
| | 79 | No use | - |
| | 80 | No use | - |
| | 81 | No use | - |
| | 82 | No use | - |
| | 83 | No use | - |
| | 84 | No use | - |
| | 85 | No use | - |
| | 86 | No use | - |
| | 87 | No use | - |
| | 88 | No use | - |
| | 89 | No use | - |
| | 90 | No use | - |
| | 91 | No use | - |
| | 92 | No use | - |

| Cate | Pr. | Parameter | Default value |
|---|---|---|---|
| 5 | 93 | No use | - |
| | 94 | No use | - |
| | 95 | No use | - |
| | 96 | For Manufacturer use | 0 |
| | 97 | For Manufacturer use | 0 |
| | 98 | No use | - |
| | 99 | No use | - |
| | 100 | No use | - |
| | 101 | No use | - |
| | 102 | For Manufacturer use | 0 |

| Cate | Pr. | Parameter | Default value |
|---|---|---|---|
| | | | |

*1 When checking directly value of parameter-file with a text data etc., it does not show the decimal point. Ex) Pr6.24 Load change compensation filter ･･･ Value of Panaterm：0.53 / Value of parameter-file：53

* Parameter names in the table correspond to the DD motor (rotary type). For parameter names and setting values corresponding to linear motors, refer to the technical document.

■Default value of the parameters (7/11)



| PARAMETER | MODEL | MINAS-A6N (NL/NM) series common |
|---|---|---|

| Cate | Pr. | Parameter | Default value |
|---|---|---|---|
| 6 | 0 | No use | - |
| | 1 | No use | - |
| | 2 | Velocity deviation excess setup | 0 |
| | 3 | For Manufacturer use | 0 |
| | 4 | No use | - |
| | 5 *1 | Position 3rd gain valid time | 0 |
| | 6 | Position 3rd gain scale factor | 100 |
| | 7 | Torque command additional value | 0 |
| | 8 | Positive direction torque compensation value | 0 |
| | 9 | Negative direction torque compensation value | 0 |
| | 10 | Function expansion setup | 16 |
| | 11 | For Manufacturer use | 100 |
| | 12 | No use | - |
| | 13 | No use | - |
| | 14 | Emergency stop time at alarm | 200 |
| | 15 | 2nd over-speed level setup | 0 |
| | 16 | No use | - |
| | 17 | No use | - |
| | 18 *1 | Power-up wait time | 0 |
| | 19 | For Manufacturer use | 0 |
| | 20 | For Manufacturer use | 0 |
| | 21 | For Manufacturer use | 0 |
| | 22 | A, B phase feedback scale pulse output method selection | 0 |
| | 23 | Load change compensation gain | 0 |
| | 24 *1 | Load change compensation filter | 0.53 |
| | 25 | For Manufacturer use | Size A-G 0<br>Size H 500 |
| | 26 | For Manufacturer use | 2 |
| | 27 | Warning latch state setup | 0 |
| | 28 | No use | - |
| | 29 | No use | - |
| | 30 | For Manufacturer use | 0 |

| Cate | Pr. | Parameter | Default value |
|---|---|---|---|
| 6 | 31 | Real time auto tuning estimation speed | 1 |
| | 32 | Real time auto tuning custom setup | 0 |
| | 33 | No use | - |
| | 34 *1 | For Manufacturer use | 0 |
| | 35 *1 | For Manufacturer use | 0.10 |
| | 36 | Dynamic brake operation input setup | 0 |
| | 37 *1 | Oscillation detecting level | 0 |
| | 38 | Warning mask setup | 4 |
| | 39 | Warning mask setup2 | 0 |
| | 40 | No use | - |
| | 41 | 1st damping depth | 0 |
| | 42 *1 | Two-stage torque filter time constant | 0 |
| | 43 | Two-stage torque filter attenuation term | 0 |
| | 44 | No use | - |
| | 45 | No use | - |
| | 46 | No use | - |
| | 47 | Function expansion settings 2 | 1 |
| | 48 *1 | Adjust filter | A枠 1.1<br>B-C枠 1.2<br>D-H枠 1.7 |
| | 49 | Adjust/Torque command attenuation term | 15 |
| | 50 *1 | Viscous friction compensation gain | 0 |
| | 51 | Immediate cessation completion wait time | 0 |
| | 52 | For Manufacturer use | 0 |
| | 53 | For Manufacturer use | 0 |
| | 54 | For Manufacturer use | 0 |
| | 55 | No use | - |
| | 56 | No use | - |
| | 57 | Torque saturation anomaly detection time | 0 |
| | 58 | For Manufacturer use | 0 |
| | 59 | For Manufacturer use | 0 |
| | 60 | 2nd damping depth | 0 |
| | 61 *1 | 1st resonance frequency | 0 |

| Cate | Pr. | Parameter | Default value |
|---|---|---|---|
| 6 | 62 | 1st resonance attenuation ratio | 0 |
| | 63 *1 | 1st anti-resonance frequency | 0 |
| | 64 | 1st anti-resonance attenuation ratio | 0 |
| | 65 *1 | 1st response frequency | 0 |
| | 66 *1 | 2nd resonance frequency | 0 |
| | 67 | 2nd resonance attenuation ratio | 0 |
| | 68 *1 | 2nd anti-resonance frequency | 0 |
| | 69 | 2nd anti-resonance attenuation ratio | 0 |
| | 70 *1 | 2nd response frequency | 0 |
| | 71 | 3rd damping depth | 0 |
| | 72 | 4th damping depth | 0 |
| | 73 *1 | Load estimation filter | 0 |
| | 74 *1 | Torque compensation frequency 1 | 0 |
| | 75 *1 | Torque compensation frequency 2 | 0 |
| | 76 | Load estimation count | 0 |
| | 77 | No use | - |
| | 78 | No use | - |
| | 79 | No use | - |
| | 80 | No use | - |
| | 81 | No use | - |
| | 82 | No use | - |
| | 83 | No use | - |
| | 84 | No use | - |
| | 85 | Condition setting for escape operation | 0 |
| | 86 | Alarm setting for escape operation | 0 |
| | 87 | For Manufacturer use | 0 |
| | 88 | For Manufacturer use | 0 |
| | 89 | No use | - |
| | 90 | No use | - |
| | 91 | No use | - |
| | 92 | No use | - |

| Cate | Pr. | Parameter | Default value |
|---|---|---|---|
| 6 | 93 | No use | - |
| | 94 | No use | - |
| | 95 | No use | - |
| | 96 | No use | - |
| | 97 | Function expansion setup 3 | 0 |
| | 98 | Function expansion setup 4 | 0 |
| | 99 | No use | - |
| | 100 | No use | - |
| | 101 | No use | - |
| | 102 | No use | - |
| | 103 | No use | - |
| | 104 | No use | - |
| | 105 | Excessive position deviation warning setting | 0 |

| Cate | Pr. | Parameter | Default value |
|---|---|---|---|

*1 When checking directly value of parameter-file with a text data etc., it does not show the decimal point. Ex) Pr6.24 Load change compensation filter ･･･ Value of Panaterm：0.53 / Value of parameter-file：53

* Parameter names in the table correspond to the DD motor (rotary type). For parameter names and setting values corresponding to linear motors, refer to the technical document.

■Default value of the parameters (8/11)



| PARAMETER | MODEL | MINAS-A6N (NL/NM) series common |
|---|---|---|

| Cate | Pr. | Parameter | Default value |
|---|---|---|---|
| 7 | 0 | Display on LED | 0 |
| | 1 | Display time setup upon power-up | 0 |
| | 2 | No use | - |
| | 3 | Output setup during torque limit | 0 |
| | 4 | For Manufacturer use | 0 |
| | 5 | For Manufacturer use | 0 |
| | 6 | For Manufacturer use | 0 |
| | 7 | For Manufacturer use | 0 |
| | 8 | For Manufacturer use | 0 |
| | 9 | Correction time of latch delay 1 | 360 |
| | 10 | Software limit function | 0 |
| | 11 | Positive side software limit value | 500000 |
| | 12 | Negative side software limit value | -500000 |
| | 13 | Absolute home position offset | 0 |
| | 14 | Main power off warning detection time | 0 |
| | 15 | Positioning adjacent range | 10 |
| | 16 | For Manufacturer use | 0 |
| | 17 | No use | - |
| | 18 | For Manufacturer use | 0 |
| | 19 | No use | - |
| | 20 | RTEX communication cycle setup | 3 |
| | 21 | RTEX command updating cycle setup | 2 |
| | 22 | RTEX function extended setup 1 | 0 |
| | 23 | RTEX function extended setup 2 | 18 |
| | 24 | RTEX function extended setup 3 | 0 |
| | 25 | RTEX speed unit setup | 0 |
| | 26 | RTEX continuous error warning setup | 0 |
| | 27 | RTEX accumulated error warning setup | 0 |
| | 28 | RTEX_Update_Counter error warning setup | 0 |
| | 29 | RTEX monitor select 1 | 0 |
| | 30 | RTEX monitor select 2 | 0 |

| Cate | Pr. | Parameter | Default value |
|---|---|---|---|
| 7 | 31 | RTEX monitor select 3 | 0 |
| | 32 | RTEX monitor select 4 | 0 |
| | 33 | RTEX monitor select 5 | 0 |
| | 34 | RTEX monitor select 6 | 0 |
| | 35 | RTEX command setting 1 | 0 |
| | 36 | RTEX command setting 2 | 0 |
| | 37 | RTEX command setting 3 | 0 |
| | 38 | RTEX_Update_Counter error protection setup | 0 |
| | 39 | For Manufacturer use | 0 |
| | 40 | RTEX function extended setup 4 | 0 |
| | 41 | RTEX function extended setup 5 | 0 |
| | 42 | No use | - |
| | 43 | Magnet pole position estimation completion output setup | 0 |
| | 44 | No use | - |
| | 45 | No use | - |
| | 46 | No use | - |
| | 47 | No use | - |
| | 48 | No use | - |
| | 49 | No use | - |
| | 50 | No use | - |
| | 51 | No use | - |
| | 52 | For Manufacturer use | 0 |
| | 53 | No use | - |
| | 54 | No use | - |
| | 55 | No use | - |
| | 56 | No use | - |
| | 57 | No use | - |
| | 58 | No use | - |
| | 59 | No use | - |
| | 60 | No use | - |
| | 61 | No use | - |

| Cate | Pr. | Parameter | Default value |
|---|---|---|---|
| 7 | 62 | No use | - |
| | 63 | No use | - |
| | 64 | No use | - |
| | 65 | No use | - |
| | 66 | No use | - |
| | 67 | No use | - |
| | 68 | No use | - |
| | 69 | No use | - |
| | 70 | No use | - |
| | 71 | No use | - |
| | 72 | No use | - |
| | 73 | No use | - |
| | 74 | No use | - |
| | 75 | No use | - |
| | 76 | No use | - |
| | 77 | No use | - |
| | 78 | For Manufacturer use | 0 |
| | 79 | No use | - |
| | 80 | For Manufacturer use | 0 |
| | 81 | For Manufacturer use | 0 |
| | 82 | No use | - |
| | 83 | No use | - |
| | 84 | No use | - |
| | 85 | No use | - |
| | 86 | No use | - |
| | 87 | For Manufacturer use | 0 |
| | 88 | For Manufacturer use | 0 |
| | 89 | For Manufacturer use | 0 |
| | 90 | No use | - |
| | 91 | RTEX communication cycle setup_2 | 500000 |
| | 92 | Correction time of latch delay 2 | 0 |

| Cate | Pr. | Parameter | Default value |
|---|---|---|---|
| 7 | 93 | Home position return limit speed | 0 |
| | 94 | No use | - |
| | 95 | Number of RTEX continuous communication error protection 1 detections | 4 |
| | 96 | Number of RTEX continuous communication error protection 2 detections | 12 |
| | 97 | Number of RTEX communication timeout error protection detections | 4 |
| | 98 | Number of RTEX cyclic data error protection 1/2 detections | 4 |
| | 99 | RTEX function extended setup 6 | 0 |
| | 100 | For Manufacturer use | 0 |
| | 101 | No use | - |
| | 102 | No use | - |
| | 103 | No use | - |
| | 104 | No use | - |
| | 105 | No use | - |
| | 106 | No use | - |
| | 107 | No use | - |
| | 108 | RTEX communication synchronization setup | 7 |
| | 109 | For Manufacturer use | 0 |
| | 110 | For Manufacturer use | 0 |
| | 111 | For Manufacturer use | 0 |
| | 112 | Selection of RTEX communication status flag | 0 |
| | 113 | No use | - |
| | 114 | For Manufacturer use | 0 |
| | 115 | No use | - |
| | 116 | No use | - |
| | 117 | No use | - |
| | 118 | No use | - |
| | 119 | For Manufacturer use | 0 |

| Cate | Pr. | Parameter | Default value |
|---|---|---|---|
| | | | |

*1 When checking directly value of parameter-file with a text data etc., it does not show the decimal point. Ex) Pr6.24 Load change compensation filter ･･･ Value of Panaterm：0.53 / Value of parameter-file：53

* Parameter names in the table correspond to the DD motor (rotary type). For parameter names and setting values corresponding to linear motors, refer to the technical document.

■Default value of the parameters (9/11)

| PARAMETER | MODEL | MINAS-A6N (NL/NM) series common |
|---|---|---|

| Cate | Pr. | Parameter | Default value |
|---|---|---|---|
| 8 | 0 | For Manufacturer use | 0 |
| | 1 | Profile linear acceleration constant | 100 |
| | 2 | For Manufacturer use | 0 |
| | 3 | For Manufacturer use | 0 |
| | 4 | Profile linear deceleration constant | 100 |
| | 5 | For Manufacturer use | 0 |
| | 6 | No use | - |
| | 7 | No use | - |
| | 8 | No use | - |
| | 9 | No use | - |
| | 10 | Amount of travel after profile position latch detection | 0 |
| | 11 | No use | - |
| | 12 | Profile return to home position mode setup | 0 |
| | 13 | Profile home position return velocity 1 | 50 |
| | 14 | Profile home position return velocity 2 | 5 |
| | 15 | For Manufacturer use | 0 |
| | 16 | No use | - |
| | 17 | Relative displacement of escape operation | 0 |
| | 18 | Speed of escape operation | 0 |
| | 19 | For Manufacturer use | 0 |

*1 When checking directly value of parameter-file with a text data etc., it does not show the decimal point. Ex) Pr6.24 Load change compensation filter ･･･ Value of Panaterm：0.53 / Value of parameter-file：53

* Parameter names in the table correspond to the DD motor (rotary type). For parameter names and setting values corresponding to linear motors, refer to the technical document.

■Default value of the parameters (10/11)



| PARAMETER | MODEL | MINAS-A6N (NL/NM) series common |
|---|---|---|

| Cate | Pr. | Parameter | Default value |
|---|---|---|---|
| 9 | 0 | Motor type selection | 1 |
| | 1 | Feedback scale resolution/ Number of scale pulses per rotation | 0.000 |
| | 2 | Magnetic pole pitch | 0 |
| | 3 | Number of pole pairs per rotation | 0 |
| | 4 | Weight of motor's movable section/Motor inertia | 0 |
| | 5 | Rated motor thrust/ Rated motor torqu | 0 |
| | 6 | Rated motor effective current | 0 |
| | 7 | Maximum instantaneous motor current | 0 |
| | 8 | Motor phase inductance | 0 |
| | 9 | Motor phase resistance | 0 |
| | 10 | Overspeed level | 0 |
| | 11 | Carrier frequency selection | 1 |
| | 12 | Automatic current response adjustmen | 80 |
| | 13 | Current proportional gain | 50 |
| | 14 | Current integrative gain | 10 |
| | 15 | No use | - |
| | 16 | No use | - |
| | 17 | For manufacturer use | 0 |
| | 18 | For manufacturer use | 0 |
| | 19 | For manufacturer use | 0 |
| | 20 | Magnetic poles detection method selection | 0 |
| | 21 | CS phase setting | 0 |
| | 22 | Thrust command time for estimating magnetic poles position | 200 |
| | 23 | Command thrust for estimating magnetic poles position | 50 |
| | 24 | Zero moving pulse width for estimating magnetic poles position | 100 |
| | 25 | Number of pulses for judging as a motor stop when estimating magnetic poles position | 40 |
| | 26 | Time for judging as a motor stop when estimating magnetic poles position | 40 |
| | 27 | Time limit of motor stop for estimating magnetic poles position | 1000 |
| | 28 | Thrust command filter for estimating magnetic poles position | 1.00 |
| | 29 | Overload protection time constant setting | 0 |
| | 30 | Pulse count between magnetic pole | 0 |

| Cate | Pr. | Parameter | Default value |
|---|---|---|---|
| 9 | 31 | For Manufacturer use | 0 |
| | 32 | For Manufacturer use | 0 |
| | 33 | For Manufacturer use | 100 |
| | 34 | For Manufacturer use | 0 |
| | 35 | Thrust saturation error protection frequency | 0 |
| | 36 | No use | - |
| | 37 | No use | - |
| | 38 | No use | - |
| | 39 | No use | - |
| | 40 | No use | - |
| | 41 | No use | - |
| | 42 | No use | - |
| | 43 | No use | - |
| | 44 | No use | - |
| | 45 | No use | - |
| | 46 | No use | - |
| | 47 | No use | - |
| | 48 | Voltage feed forward gain 1 | 0 |
| | 49 | Voltage feed forward gain 2 | 0 |
| | 50 | For Manufacturer use | 0 |

| Cate | Pr. | Parameter | Default value |
|---|---|---|---|
| | | | |

| Cate | Pr. | Parameter | Default value |
|---|---|---|---|
| | | | |

| Cate | Pr. | Parameter | Default value |
|---|---|---|---|
| | | | |

*1 When checking directly value of parameter-file with a text data etc., it does not show the decimal point. Ex) Pr6.24 Load change compensation filter ･･･ Value of Panaterm：0.53 / Value of parameter-file：53

* Parameter names in the table correspond to the DD motor (rotary type). For parameter names and setting values corresponding to linear motors, refer to the technical document.

■Default value of the parameters (11/11)



| PARAMETER | MODEL | MINAS-A6N (NL/NM) series common |
|---|---|---|

| Cate | Pr. | Parameter | Default value | Cate | Pr. | Parameter | Default value | Cate | Pr. | Parameter | Default value | Cate | Pr. | Parameter | Default value | Cate | Pr. | Parameter | Default value |
|---|---|---|---|---|---|---|---|---|---|---|---|---|---|---|---|---|---|---|---|
| 15 | 0 | For Manufacturer use | 0 | 15 | 31 | For Manufacturer use | 5 | | | | | | | | | | | | |
| | 1 | No use | - | | 32 | No use | - | | | | | | | | | | | | |
| | 2 | No use | - | | 33 | For Manufacturer use | 0 | | | | | | | | | | | | |
| | 3 | No use | - | | 34 | For Manufacturer use | 0 | | | | | | | | | | | | |
| | 4 | No use | - | | 35 | For Manufacturer use | 1 | | | | | | | | | | | | |
| | 5 | No use | - | | | | | | | | | | | | | | | | |
| | 6 | No use | - | | | | | | | | | | | | | | | | |
| | 7 | No use | - | | | | | | | | | | | | | | | | |
| | 8 | No use | - | | | | | | | | | | | | | | | | |
| | 9 | No use | - | | | | | | | | | | | | | | | | |
| | 10 | No use | - | | | | | | | | | | | | | | | | |
| | 11 | No use | - | | | | | | | | | | | | | | | | |
| | 12 | No use | - | | | | | | | | | | | | | | | | |
| | 13 | No use | - | | | | | | | | | | | | | | | | |
| | 14 | No use | - | | | | | | | | | | | | | | | | |
| | 15 | No use | - | | | | | | | | | | | | | | | | |
| | 16 | For Manufacturer use | 2 | | | | | | | | | | | | | | | | |
| | 17 | For Manufacturer use | 4 | | | | | | | | | | | | | | | | |
| | 18 | No use | - | | | | | | | | | | | | | | | | |
| | 19 | No use | - | | | | | | | | | | | | | | | | |
| | 20 | No use | - | | | | | | | | | | | | | | | | |
| | 21 | No use | - | | | | | | | | | | | | | | | | |
| | 22 | No use | - | | | | | | | | | | | | | | | | |
| | 23 | No use | - | | | | | | | | | | | | | | | | |
| | 24 | No use | - | | | | | | | | | | | | | | | | |
| | 25 | No use | - | | | | | | | | | | | | | | | | |
| | 26 | No use | - | | | | | | | | | | | | | | | | |
| | 27 | No use | - | | | | | | | | | | | | | | | | |
| | 28 | No use | - | | | | | | | | | | | | | | | | |
| | 29 | No use | - | | | | | | | | | | | | | | | | |
| | 30 | For Manufacturer use | 0 | | | | | | | | | | | | | | | | |

*1 When checking directly value of parameter-file with a text data etc., it does not show the decimal point. Ex) Pr6.24 Load change compensation filter ･･･ Value of Panaterm：0.53 / Value of parameter-file：53

* Parameter names in the table correspond to the DD motor (rotary type). For parameter names and setting values corresponding to linear motors, refer to the technical document.