Panasonic

PANASERVO AC D Series

Operation Manual

- We thank you for your purchase of our RANA SERVO AC.
- This manual explains the operation and handling of the control box and motor.
- The handling and operation are quite simple, however inadvertent operation may cause accidents, reduce the service life of equipment, downgrade its performance, or damage the unit itself.
  Before starting operation, be sure to read this operation manual carefully for correct operation.
- Please keep this operation manual carefully, and read repeatedly according to necessity.

TABLE OF CONTENTS

Page

■ **Introduction** 1

■ **Parts Identification** 1

■ **Caution** 2
- 1. Safety Precautions 2
- 2. Precautions for correct use 2

■ **Operating Conditions** 3

■ **Installation** 3
- 1. Pulley and pulley cover installation 3
- 2. Motor installation 4
- 3. Control box installation 4
- 4. Belt setting 4
- 5. Wiring and grounding 5

■ **Test Operation** 6
- 1. Before turning the power switch ON: 6
- 2. When turning the power switch ON: 6
- 3. After pedaling down slightly: 7

■ **Adjustment** 7

■ **How to Use** 8
- 1. Operation by pedal 9
- 2. Connector 9
- 3. Functions of switch and volume (variable resistor) on panel unit 12
- 4. Functions of dip switch for adjustment 13
- 5. Functions of volume for adjustment 14
- 6. Functions of internal dip switch 14

■ **Troubleshooting** 16
- 1. Before you consider servicing the unit 16
- 2. Error display 17

■ **Specifications** 18

■ **External Dimensional Drawing** 19

■ **Console** 20

■ Introduction

After unpacking:

- Make sure that your equipment is as ordered.
- Check to see that your equipment is not damaged due to an accident during transportation.
- Check the accessories.

  Accessories for motor:

  A set of motor mounting bolts (bolts, nuts,washers & spring washers)

  A set of pulley cover (pulley cover A, pulley cover B, screws, washers & nuts)

  A set of synchronizer (synchronizer, adaptor boss and screw, stabilizer, hexa-wrench.

  Accessories for control box:

  Power cord

If you should find a fault, contact the sales person in which you purchased your equipment.

■ Parts Identification

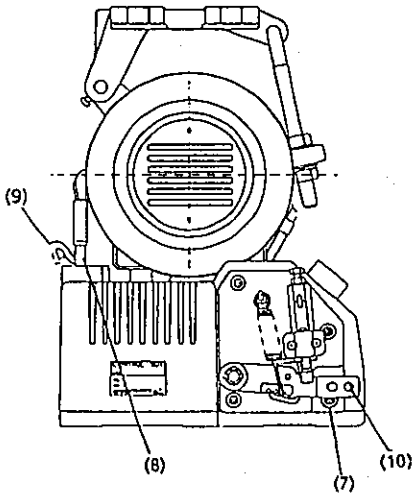

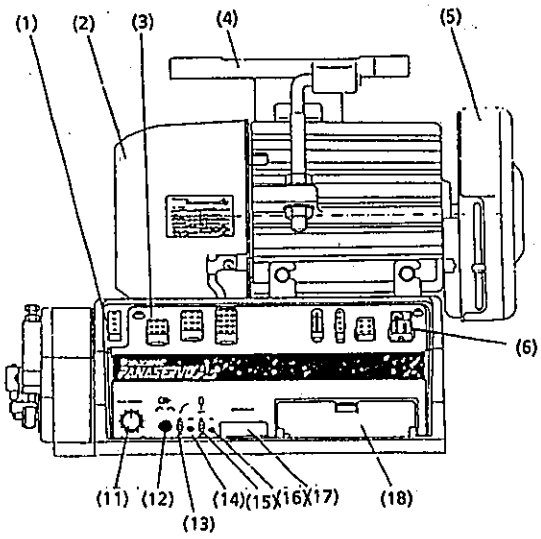

(1) Power connector
(2) Fan cover
(3) Motor sensor connector
(4) Slide base
(5) Pulley cover
(6) Synchronizer connector
(7) Pedal sensor
(8) Motor connector
(9) Lamp lead wire/fuse
(10) Pedal lever
(11) Maximum speed control (knob)
(12) Rotating direction selector switch
(13) Soft start switch
(14) Inertia auto tuning switch
(15) 1 or 2 position select switch
(16) Pilot lamp
(17) Console connector
(18) Setting unit window

■ Caution

1. Safety Precaution

Be sure to turn the power OFF before adjusting the sewing machine, removing or re-inserting the connector.

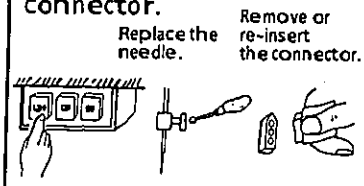

When you lay down the sewing machine head, touch the needle or remove and re-insert the connector, do not fail to turn the power switch "OFF" always make sure the pilot lamp goes off.

Grounding is required.

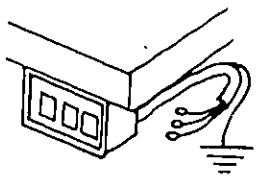

A grounding conductor (green) is provided in the push button switch; therefore, grounding is necessary.

Do not disassemble the motor.

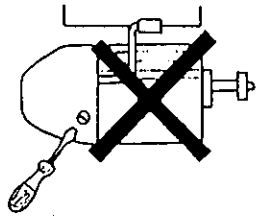

Precision parts are assembled inside the motors fan cover, it is therefore prohibited to disassemble any of its parts.

- Take special care not to touch the printed circuit board (PC board) : the PC board has a high voltage circuitry.
- Wait one minute after the power is turned OFF, the internal circuit may still be charged with high voltage. Before changing over the dip switch inside the control box, do not forget to turn the power OFF. Always make sure the pilot lamp has gone out.
- After completion of the operation, be sure to turn the power switch OFF. Take care not to depress or heel back the pedal until the pilot lamp goes out (approx. 8 seconds) after the power switch is turned OFF; otherwise, the pedal operation may cause the sewing machine to rotate.
- For wiring and wiring equipment, the use of a no-fuse breaker is recommended. (Refer to Page 5)
- Take care so that no foreign matter, such as sewing machine oil, intrudes into the control box.

2. Precautions for Correct Use

- Do not use equipment near a strong noise source, such as high-frequency welding machines.
- Static electricity may occur in the belt. Take care so that the belt does not come into contact with the belt cover on the sewing machine side. Ground metallic parts such as the belt cover to the grounding conductor.
- If noise intrudes into the radio, keep it away from the motor. (If a weak signal radio broadcast is received, radio noise may become large.)
- If a ceiling lamp flickers, wiring connection of motor power supply with different lines from the ceiling lamp will reduce this flickering.
- Check the connector for the shape and direction, and insert it firmly.
- Do not touch the connector pin section; poor contact of the connector and malfunctions by static electricity may result.
- Before changing the dip switch or adjusting the volume, be sure to turn the power OFF. Use an insulated screwdriver. Static electricity may cause internal parts to break down.

■ Operating Conditions

Supply voltage	Rated voltage ± 10%
Operating temperature	0 - 40°C
Operating humidity	20 - 80%Rh (No condensation allowed)
Atmosphere	Indoors (where no corrosive gas is present)

■ Installation

1. Pulley cover & pulley installation

① Installation of pulley cover A
After installing pulley cover A with the supplied screws as shown below, insert the nuts into pulley cover A.

② Pulley installation
Tighten the pulley securely, utilizing a belt, for example.

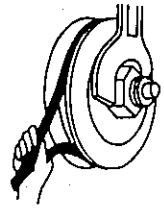

Improper tightening the pulley may cause malfunctions.

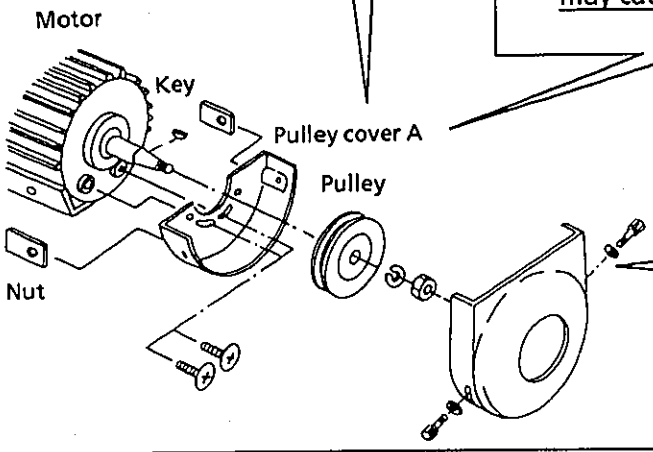

③ Installation of pulley cover B
After tightening the belt, install pulley cover B, using the supplied screws, and adjust the angle so that it does not come into contact with the belt.

<How to Select Pulley>

- To obtain motor performance to the full capacity, select a pulley correctly.

$$\text{Motor pulley diameter} = \frac{\text{Machine speed}}{\text{Motor speed}} \times \text{Machine pulley diameter}$$

※Make this calculation with the motor speed as 3,000 r/min for either 50Hz or 60Hz.

- For low-speed sewing operation take care not to set the rotating speed too high. (If you desire to limit the maximum speed, refer to "Pedal Curve Adjusting Volume" paragraph on page 13.)

2. Motor Installation

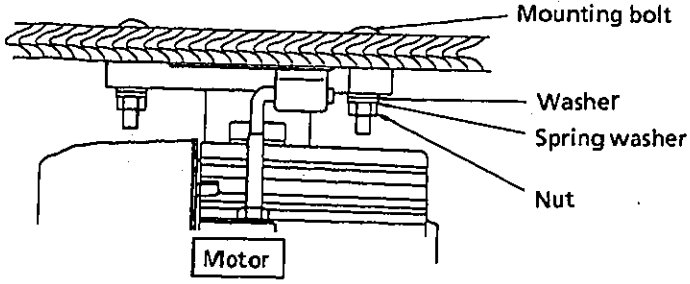

- Using the supplied mounting bolts, mount the motor to the table.

3. Control Box Installation

Fasten the control box to the motor firmly with the control box mounting screws.

Insert the input cable from the motor into the motor connector of the control box.

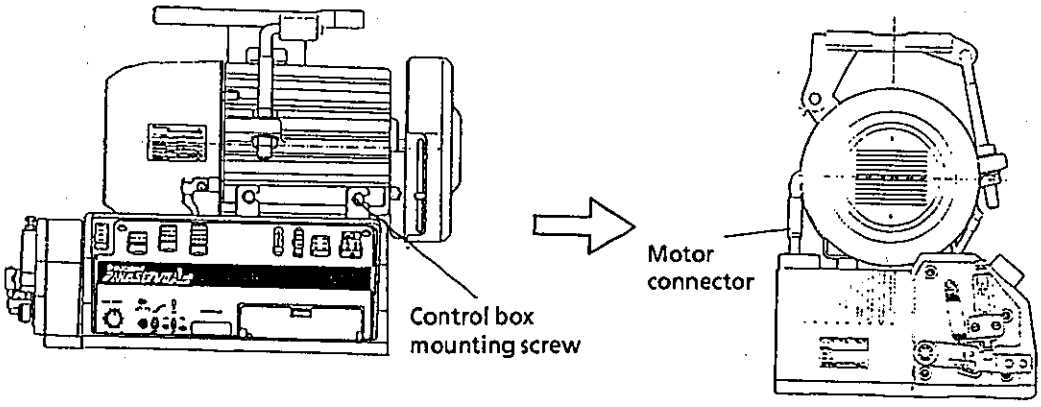

4. Belt setting

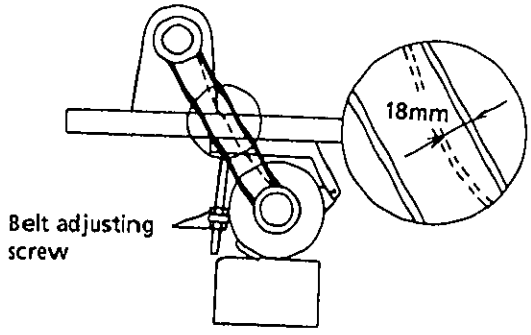

When a force of 9. 8N (1kgf) is applied in the center of the belt, tighten the belt to such an extent that it sags by approx, 18mm.
For reference, the following method is also recommended:

(1) Loosen the belt adjusting screws at the upper and lower sides, and support the motor with only the belt.

(2) Tighten the belt adjusting screw at the upper side and re-tighten it one more turn from the position in which the load is applied to the screw.

(3) Tighten it with the belt adjusting screw at the lower side and secure it.

5. Wiring and Grounding

(1) When wiring , please follow the National Electrical Code Standards and electric power company provisions, while and paying particular attention to safety.

(2) For power supply, use a fuse and safety breaker. The proper current capacity used is 15A for single phase and 10A for 3-phase.

Recommended No-fuse Breaker and Electric Wire (MATSUSHITA Electric Parts No.)

NO. of Phases	No-fuse Breaker (Rated Current)	Wire (mm^2)
Single phase	BBP2-15 (15A)	2.0
3-phase	BBP3-10 (10A)	2.0

(3) The push button switch is provided with a green grounding conductor (marked "E") : always ground this.

(4) When the local illuminating lamp is used, strip the lamp lead wire tip before connection.
- The lamp used should be 6 to 8V, 15 to 18W.
- Protect the lead wire connection completely.
- If no lamp is used, be sure to insulate the lamp lead wires.

<Shortcircuit will causes the fuse to be blown. The fuse used for replacement should be 5A.>

(5) Connection to high voltage power source (380-415V)
① Connect the motor between neutral point to each power line.
② Confirm the voltage is 220V - 240V, and set the voltage select switch to right position.
③ Balance each line load in connecting multiple motors.

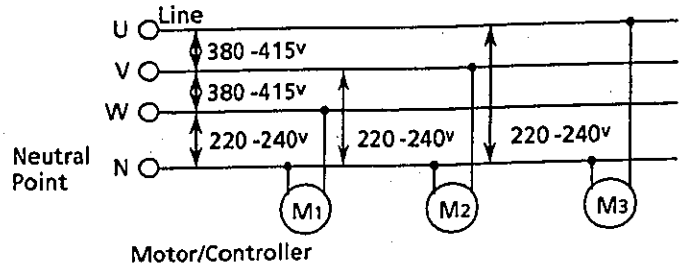

6. Installation of Synchronizer

Attach the synchronizer to the handwheel of the sewing machine.

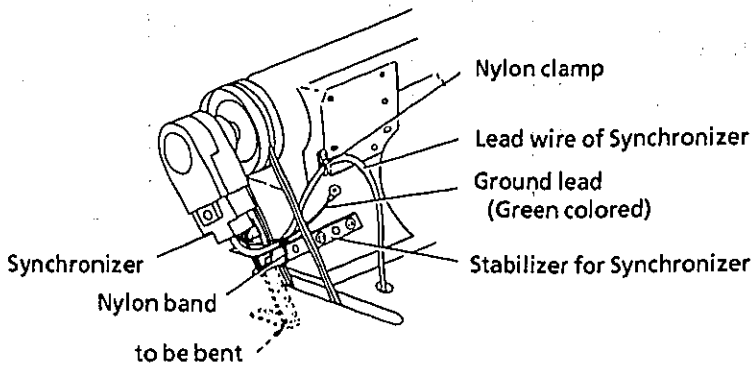

If adjustments of the synchronizer are necessary, please refer the "ADJUSTMENT" .

NOTE: The cable extending form the synchronizer should be fixed to the retaining bolt with the band. The grounding terminal must be affixed on the sewing machine.

■ Test Operation

1. Before you turn the power switch ON:

Check supply voltage.

Make sure the voltage indicated on the control box coincides with supply voltage.

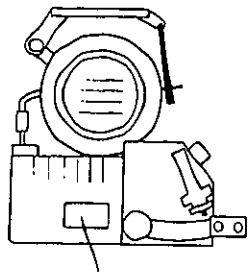

100 - 120V? 200 - 240V?

Check the line voltage bofore operation.

For different rated line voltage, reset the tap by turning the voltage selector.
Note that incorrect setting of the voltage selector switch can cause malfunction of each solenoid.

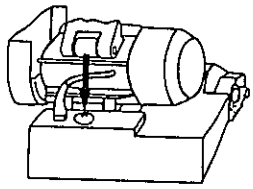

Check connector connection.

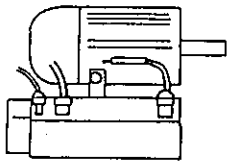

Check that the pedal is in the neutral position.

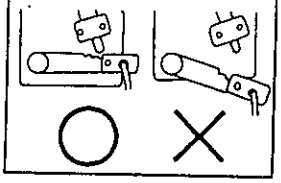

Check that the pulley can be rotated lightly by hand.

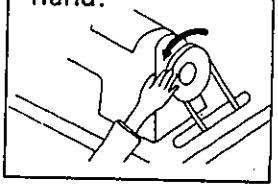

Check to see that no cable comes into contact with the belt and pulley.

Bind all cables to prevent their comming into contact with belt and pulley.

2. When you turn the power switch ON:

Make sure that the pilot lamp is lighting.

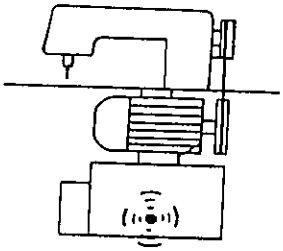

Check to see that no abnormal heating occurs.

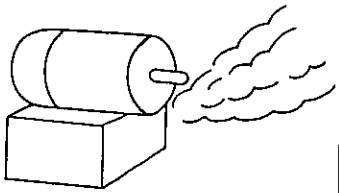

Check to see that no abnormal operation is performed.

Chek to see that the motor does not start to rotate.

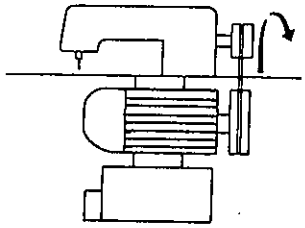

3. After you pedal down slightly:

Make sure the sewing machine rotating direction is correct.

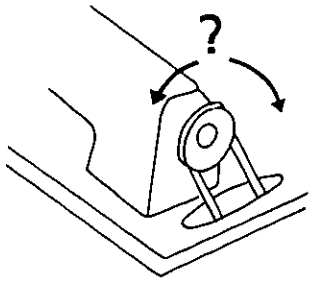

If the rotation is reversed, change the direction with the rotation direction selector switch on the control box.

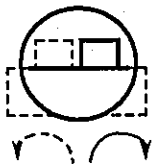

■ Adjustment

Before starting any adjustment, be sure to turn the power switch "OFF".

1. Pedal force adjustment:

(1) Adjust the pedal-down force by changing the hooking part of pedal-down spring ①.

(2) Adjust the heel-back force with ③ after loosening heel-back spring nut ②.
The mark at the window ④ is standard.
After this adjustment, tighten nut ② and fix it.

(3) For pitman rod installation, use hole ⑤.
If you desire to reduce the pedal force, utilize hole ⑥.

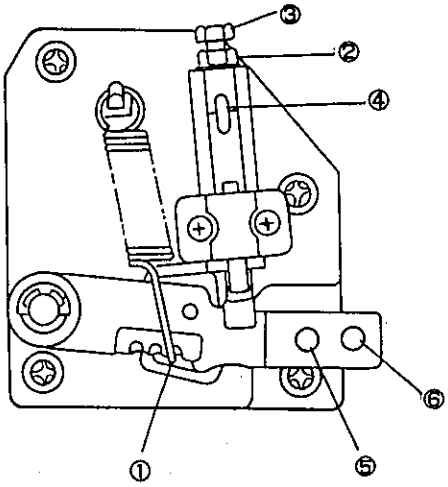

2. Adjustment of needle stop positions

At factory it is preadjusted, however , if necessary, readjust the needle stop positions by turning the reflection plates of the synchronizer as described below;

Note: While readjusting the positions, trimmer and wiper solenoids should be disconnected.
Don't touch the reflecting portions of the plates.

(1) Turn the sewing machine manually into the "needle down" position.
(MAKE SURE THE DIRECTION OF ROTATION IS CORRECT.)

(2) Remove the cover from the synchronizer. (Remove the screw A)

(3) Loosen the screw B. (Don't remove the screw B.)

(4) Turn the reflection plate A so that the adjusting tab of plate A will be located at upper-most position.

(5) Turn the sewing machine to the "needle up" position.

(6) Make the same adjustment of the reflection plate B for "needle up" position.

(7) Tighten the screw B.

(8) Place the cover on the synchronizer.

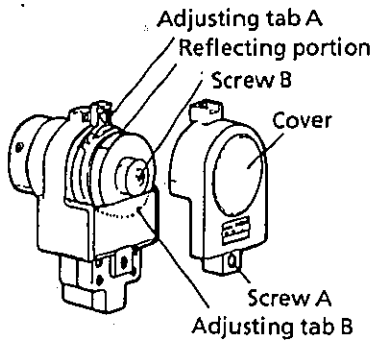

To make fine adjustments, follow the preceding instructions and ...

(1) Operate the sewing machine with the foot pedal.
(2) Press the pedal forward and release.
(3) Make sure the sewing machine is in the "needle down" position.
(4) Correct for required needle position by turning the adjusting tab A.
(5) Heel the pedal. (Needle stops in the up position.)
(6) Correct for the required position by turning the adjusting tab B.
(7) Finally tighten the screw B and install the synchronizer cover.

CAUTION: DO NOT TOUCH THE SYNCHRONIZER REFLECTION PLATE OR OTHER ROTATING PARTS WHILE THE SEWING MACHINE IS OPERATING. REMEMBER THE FINE ADJUSTMENT IS CHECKED WITH POWER ON.

■ How to Use

Operating Precautions

(1) The sewing machine does not run even when the power switch is turned ON with the pedal depressed. After setting the pedal to the neutral position once, re-press the pedal.
(2) The sewing machine does not stop in the needle-up and needle-down positions if the synchronizer connector remains removed. Also note that no inertia auto tuning is possible. (If the synchronizer is not used, refer to "DSW3-5" on page 13.)
(3) If an abnormal condition occurs, the protection circuit will function, and the motor will not rotate even if the pedal is depressed. According to the contents of abnormality, the following flashing signals are transmitted with the pilot lamp, and the abnormal condition is also warned by the buzzer. For details, refer to page 17.

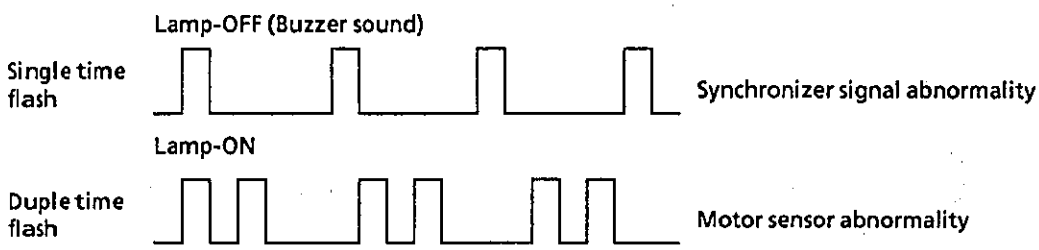

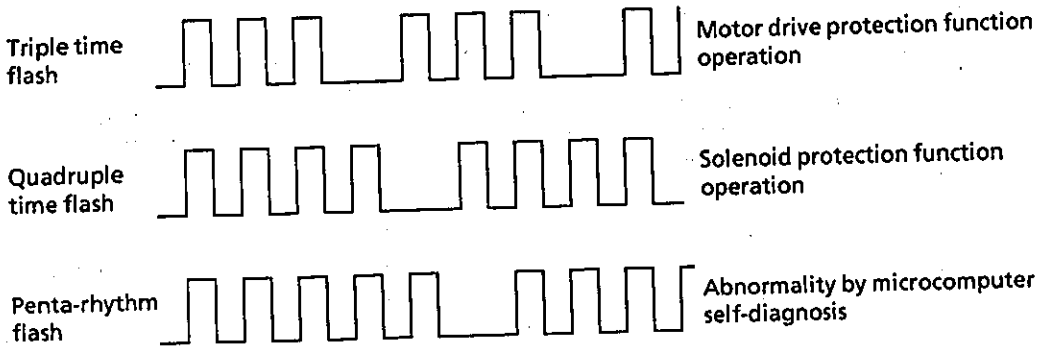

Note:

To release each protection, turn the power switch OFF and remove the cause, then turn the power switch "ON" once again. Be sure to turn the power "ON" again after the pilot lamp goes off.

1. Operation by pedal

- If the pedal is depressed, the sewing machine will run at the speed according to the distance that the pedal is depressed.
- If the pedal is set to the neutral position, the machine will stop in the needle-up or needle-down position. (Position set with 1 or 2 position selector switch.)
- If you heel back the pedal lightly, the foot lift is elevated while you heel back.
- If you heel it back forcedly, the machine stops in the needle-up position after thread trimming. Then the foot life elevates while heeling it back.

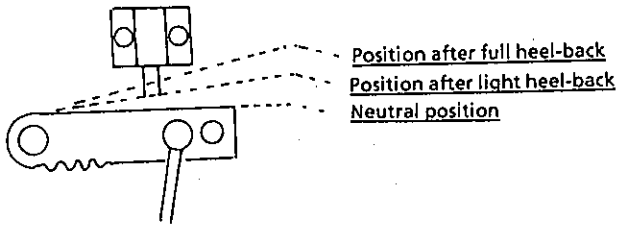

2. Connector

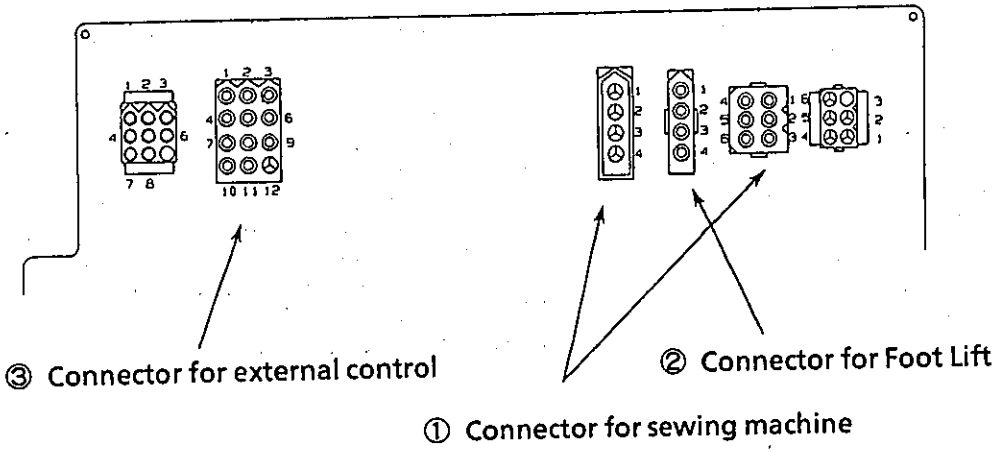

① Connector for sewing machine

4P blue (Molex 1490P)

Pin No.	Description
(1)	Trimming Solenoid
(2)	+ 34 V DC
(3)	+ 34 V DC
(4)	Back-Tack Solenoid

6P white (Molex 1261R)

Pin No.	Description
(1)	+ 34 V DC
(2)	Wiper Solenoid
(3) (4)	Manual Needle-up Switch
(5) (6)	Manual Back-Tack Switch

② Connector for Foot Lift

4P white (Molex 1490P)

Pin No.	Description
(1) (2)	Manual Foot lift Switch
(3)	Foot lift Solenoid
(4)	+ 34 V DC

③ Connector for external control

12P white (Molex 1360P)

Pin No.	Description	Contents
(1)	Needle-Down Signal Output	ON when the sewing machine is in the needle-down position (* 1)
(2) - (10)	One-shot Switch	If the section between pins 2 and 10 is closed, the sewing machine continues to run. The sewing machine speed at one-shot drive is restricted to the Back-Tack speed in automatic/continuous Back-Tack, and the maximum speed in normal stitching. Stopping after one-shot drive is possible if either pattern stitching stop process, constant position stop switch, trimmer stop switch or emergency stop switch is turned ON. (closed)
(3) - (10)	Stop in constant (home) position	If the section between pins (3) and (10) is closed, the sewing machine stops in the needle position set by the stop position selector switch. Since the sewing machine cannot be driven with the section between pins (3) and (10) closed, open it when re-drive.
(4) - (10)	Trimmer stop Switch	If the section between pins (4) and (10) is closed, the sewing machine stops in the needle-up position after the machine trimming operation. At that time, the End Back-Tack is not carried out. Since the sewing machine cannot be driven with the section between pins (4) and (10) closed, open it when re-drive.

Pin No.	Description	Contents
(5) - (10)	Emergency stop	If the section between pins (5) and (10) is closed, the sewing machine stops momentarily regardless of the needle position. Since the sewing machine cannot be driven with the section between pins (5) and (10) closed, open it when re-drive.
(6) - (10)	Trimmer home position signal Switch	When the section between pins (6) and (10) is closed, if the pedal is pressed down for sewing machine, the sewing machine cannot drive. This function is for the confirmation that the trimmer is returned to its home position.
(7) - (10)	Pedal-down Switch	If the section between pins (7) and (10) is closed, the sewing machine is driven while it is being closed. The speed in driving corresponds to the Back-Tack speed in automatic/continuous Back-Tack and the setting speed of speed setting input (9) in normal stitching. When speed setting input (9) is open, the speed is at minimum.
(8) - (10)	Heel-back Switch	If the section between pins (8) and (10) is closed, with the pedal in the neutral position, after pedal-down operation, the sewing machine performes the same operation ad the pedal is heeled back forcedly.
(9)	Speed setting Input	If the volume 1 KΩ is connected between pins (11) and (10), and the setting voltage is inputted to pin (9), the speed when the pedal-down switch is ON can be set. The setting range is between the minimum speed and the maximum speed.
(10)	Ground	Use this pin as circuit ground.
(11)	DC + 5V	Use this connector as + 5 V DC power for external control. The maximum current should be 20mA Max.
(12)	Case ground	When external control equipment is used, connect this connector to the chassis (case) of the external equipment.

(* 1) The electrical specifications of output for signal are as follows:
ON : V = 0.4V Min. I = 16mA Max.
OFF : V = 30V Max. I = 0.25mA Max.

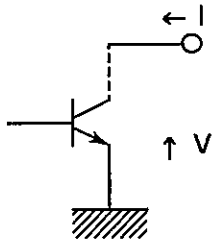

3. Functions of Switches and Volumes (Variable Resistors) on Panel Unit

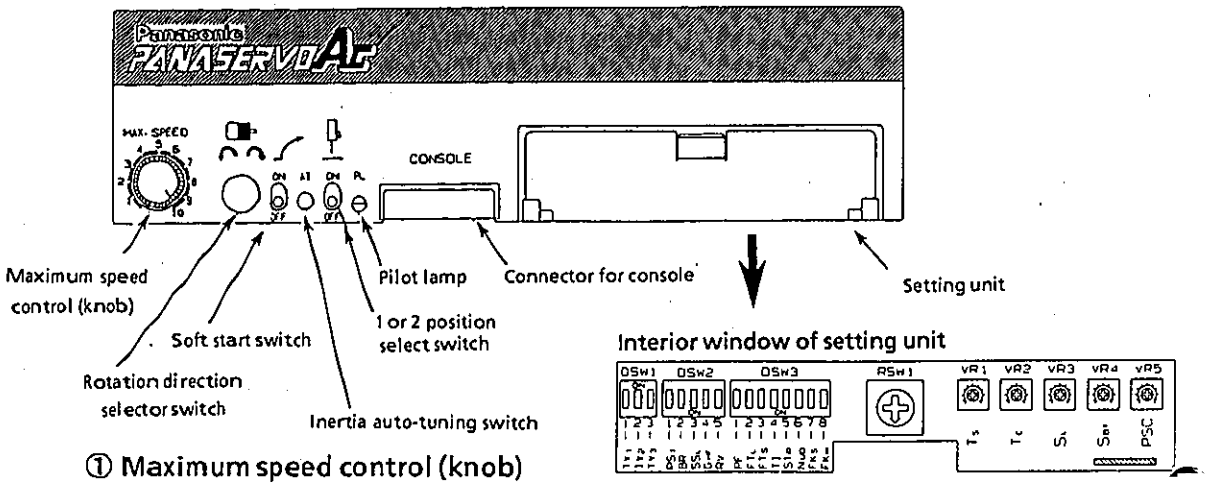

① Maximum speed control (knob)

This control adjusts the motor maximum speed.

② Rotation direction selector switch

Slide the switch to the right or left to change the rotating direction.

Slide it to the left: the motor will rotate counter-clock-wise as viewed from the motor shaft side.

Slide it to the right: the motor will rotate clock-wise as viewed from the motor shaft side.

③ Soft start switch

If the switch is turned "ON", the machine will start slowly.

If the switch is set to "OFF", the machine will accelerate as quickly as possible.

④ Inertia auto-tuning switch

When the pulley or sewing machine is replaced or the machine does not stop smoothly, use this switch.

The inertia auto-tuning method is as follows:

1) Press the switch coming in sight inside lightly, using an insulated pointed rod or the like. The pilot lamp flashes, and the buzzer sounds at the same rhythm.
2) Press pedal-down for its maximum and then allow the pedal to come to the neutral. 8 times, the buzzer will sound and pilot lamp flashing stop, thus starting normal operation automatically.

When this switch is depressed, if the pilot lamp does not flash and the buzzer beeps 3 times, adjust the rotary switch RSW1 inside the small window on the setting unit to "0"

⑤ 1 or 2 position select switch

If the switch is turned "ON": 1 position, the machine stops in the upper position.

If the switch is set to "OFF": 2 positions, the machine stops in the lower position. The machine stops in the upper position after trimming by heeling back.

4. Functions of Dip Switches for Adjustment

(Switches inside the small window on the setting unit)
Open the small window toward the operator side while pushing down the knob in the small window on the setting unit. The switch names are described inside the cover. The functions are as described as follows.

(*: Factory setting before shipment)

Switch	No.	Name	Function
DSW1			The Trimming sequence is selected.
			Standard Specifications
	1	TY_1	* OFF
	2	TY_2	* OFF
	3	TY_3	* OFF
			<CAUTION> If DSW1 setting is switched, return VR1 to VR4 to the center position. (When DSW1 setting is switched, the factory preset value is set to each VR adjustment position.)
DSW2	1	PS_1	Not used
	2	BR	* OFF : No brake during stop ON : Brake applied during stop
	3	SS_L	* OFF : Soft start – high speed ON : Soft start – low speed
	4	G_{HF}	* OFF : Normal gain: Normally, use the machine at this setting. ON : 1/2 gain: Use this function when a special sewing machine vibrates at stop.
	5	RV	* OFF : No reversing after trimming ON : Reversing after trimming(Reversing angle: 30°)
DSW3	1	PF	OFF : Foot lift does not operate at 1 st stage of heel-back. * ON : Foot lift operates at the 1 st stage of heel-back.
	2	FT_L	The automatic foot lift(AFL) time is set.
	3	FT_S	

FT_L	FT_S	Function
* OFF	OFF	No AFL provided
OFF	ON	AFL 12 sec
ON	OFF	AFL 30 sec
ON	ON	AFL continuous

	4	T_I	When the pedal is depressed during trimming: OFF : The sewing machine runs after trimming. * ON : The sewing machine does not run after trimming.
	5	ST_R	* OFF : Stop in the needle home position ON : Random stop(Use this switch when operation without synchronizer is performed.)
	6	N_{UD}	Operation by manual half needle switch * OFF : Needle-up ON : Needle-up and needle-down are performed alternately.
	7	FK_S	When lamp flickering worries you, reduce it with this switch.
	8	FK_M	

K_S	K_M	Function
* OFF	OFF	Normal setting
OFF	ON	Reducing effect: Small
ON	OFF	Reducing effect: Medium
ON	ON	Reducing effect: Large

NOTE:
It should be noted that the acceleration is more unfavorable as the flickering reducing effect is larger

5. Functions of Volume for Adjustment

(Interior window on the setting unit)

Volume	Name	Function
Rotary switch RSW1	RSW1	For a special sewing machine, this switch is used for manual setting of gain. When the sewing machine inertia is large, adjust it so that the rotary switch figure becomes smaller (Factory preset to 7 before shipment), and also adjust it so that the needle can stop normally.
VR1	T_S	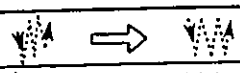 Back-Tack adjustment: Adjust seam flow at continuous Tack and Start/End Back-Tack.
VR2	T_E	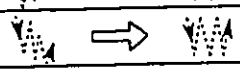
VR3	S_L	Minimum speed adjustment: Set the position speed and trimming speed. The setting range is 100 to 400 stitches/min. (Factory preset to 200 stitches/min before shipment)
VR4	S_{BT}	Set the Back-Tack speed. The setting range is the minimum speed - 3,000 stitches/min. (Factory preset to 1,800 stitches/min before shipment)
VR5	PSC	Pedal curve adjusting volume The sewing machine speed curve to the pedal-down position can be adjusted. This volume can also be used even when you desire to limit the maximum speed at the maximum pedal-down. 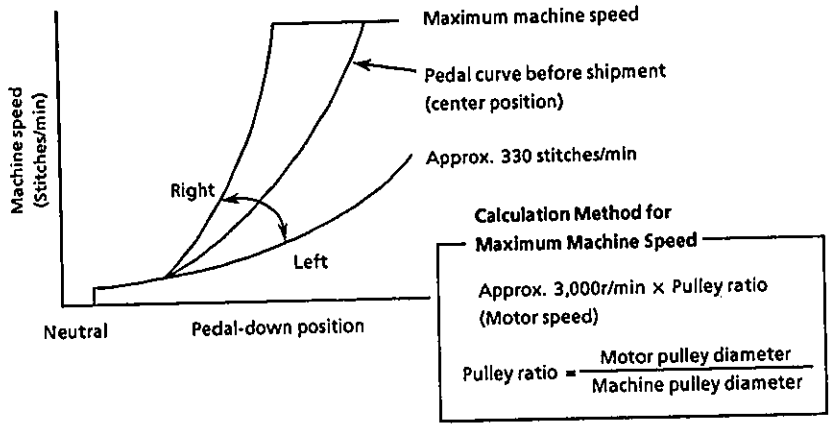

6. Functions of Internal Dip Switch

The dip switches are located at the rear of VR1 - VR5.
Remove the front panel to set the dip switch.

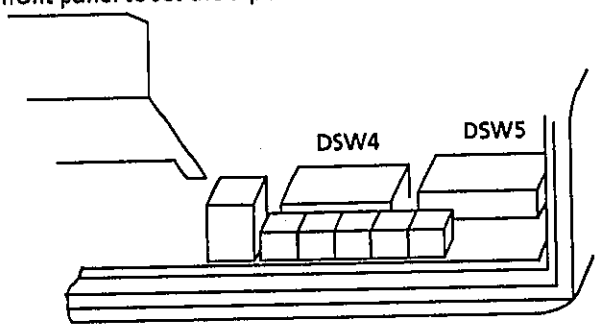

<table>
<tr><td rowspan="8">DSW4
(Internal)</td><td>1
2</td><td>Select the brake force during stop.
<table>
<tr><th>1</th><th>2</th><th>Brake force</th></tr>
<tr><td>OFF</td><td>OFF</td><td>Small</td></tr>
<tr><td>OFF</td><td>ON</td><td>↓</td></tr>
<tr><td>* ON</td><td>OFF</td><td></td></tr>
<tr><td>ON</td><td>ON</td><td>Large</td></tr>
</table></td></tr>
<tr><td>3</td><td>* OFF : Input Speed command for 12 P, (9)
ON : Input Drive command and/or Speed command for 12 p, (9)</td></tr>
<tr><td>4</td><td>Positioning method
* OFF : Right-on positioning
ON : Normal positioning</td></tr>
<tr><td>5
6</td><td>Reverse angle after trimming.
<table>
<tr><th>5</th><th>6</th><th></th></tr>
<tr><td>OFF</td><td>OFF</td><td>20°</td></tr>
<tr><td>* OFF</td><td>ON</td><td>30°</td></tr>
<tr><td>ON</td><td>OFF</td><td>45°</td></tr>
<tr><td>ON</td><td>ON</td><td>60°</td></tr>
</table></td></tr>
<tr><td>7</td><td>Adjustment of pedal down stroke for low speed range
* OFF : About 2 mm stroke
ON : About 1 mm stroke</td></tr>
<tr><td>8</td><td>OFF : With soft start at start back tack.
* ON : Without soft start at start back tack.</td></tr>
<tr><td rowspan="8">DSW5
(Internal)</td><td>1</td><td>Initial on time
* OFF : AFL initial on time 200 ms
ON : AFL initial on time 500 ms</td></tr>
<tr><td>2</td><td>Delay of machine start after FL off
* OFF : Delay time 150 ms
ON : Delay time 200 ms</td></tr>
<tr><td>3</td><td>1st stage heel back trimming
* OFF : Trimming at 2nd stage heel back
ON : Trimming at 1st stage heel back</td></tr>
<tr><td>4</td><td>FL chopping
* OFF : With FL chopping
ON : Without FL chopping</td></tr>
<tr><td>5</td><td>* OFF is normal</td></tr>
<tr><td>6</td><td>* OFF is normal</td></tr>
<tr><td>7</td><td>* ON is normal</td></tr>
<tr><td>8</td><td>* OFF is normal</td></tr>
</table>

■ Troubleshooting

1. Before you consider servicing the unit.

- First, make sure that the ground is connected securely.
- If you are not able to locate the defect according to the table, be sure to turn the power switch OFF proceeding with servicing the unit.

Symptom of Malfunction	Checking Point	Suggested Remedy
The sewing machine does not run even after pedal-down.	Is supply voltage normal?	Check for wiring.
	Power switch conduction. (Check for conduction after removing the power switch from the power supply.)	If the power switch is not conductive, replace it.
	Loose connector and disconnection.	Insert the connector correctly and firmly.
	The pilot lamp does not light up.	Ask your sales shop for repair.
	The protection circuit is actuated.	Remove the cause for which the protection circuit was actuated, and turn the power switch ON once again. (See page 15.)
The machine does not run at a high speed.	Maximum speed control. (Control box)	Turn the knob clockwise.
	Pedal adjusting volume. (VR5)	Turn the VR5 clockwise for this adjustment.
	The machine does not run smoothly.	Remove the cause for which the machine does not run smoothly.
	Supply voltage drop and open phase of 3-phase power supply.	Check the power supply wiring.
The machine does not run even after heeling back.	Check that the needle-down stop position does not deviate.	After needle-down stop, do not turn the pulley by hand.
	Inertia auto-tuning deviates.	Carry out inertia auto-tuning operation correctly(See page 12.) or adjust the rotary switch until the needle stops normally. (See page 14.)
Even when the pedal is placed in the neutral position, the motor does not stop or it does not stop in the correct position.	Belt tension.	Re-adjust.
	The pulley is loose.	Re-tighten.
	The motor stops if the pedal lever is heeled back slightly.	Replace the pedal sensor.
	The synchronizer is not connected.	Connect the synchronizer normally.

Symptom of Malfunction	Checking Point	Suggested Remedy
No solenoid works.	Open -phase operation of 3-phase control box. (Red or black lead wires or the push button switch are coming off.) Remove the power connector to check the voltage between the terminals.	Check the wiring. * When you use the machine with single phase, wiring connections should be made so that the white and black lead wires of the push button switch are connected to the power supply.
Other symptoms	No voltage of local illuminating lamp develops.	Check the wiring, and examine the fuse for lamp.

2. Error Display

Flashing Frequency	Error Contents	Probable Cause	Suggested Remedy
1	Synchronizer signal abnormal.	Synchronizer connector coming off.	Connect the synchronizer correctly and securely.
		Motor connector coming off.	Connect the connector correctly and securely.
		The machine is locked.	Check and repair the machine.
2	Motor sensor abnormal.	Motor sensor burn-out.	Replace the motor.
		Motor sensor connector coming off.	Connect the connector correctly and securely.
3	Operation of motor drive protecting function.	Control box supply voltage abnormal.	Check the power wiring.
		Motor connector coming off.	Connect the connector correctly and securely.
		The machine is locked with DSW3 - 5 ON.	Check and repair the machine.
		Control box abnormal.	Replace the control box.
		Motor winding short.	Replace the motor.
4	Operation of solenoid protecting function.	The solenoid is short.	Replace the solenoid.
5	Abnormality due to microcomputer self-diagnosis.	The control box is abnormal.	Replace the control box.

■ Specifications

Specifications		Single phase 115 V class	220 V class
Control Box	Type No.	MPCD32HNO	MPCD72HNO

Motor	Type No.	MPMD21H10
	Voltage	200 - 240 V
	Rated frequency	50/60Hz
	Rated output	550W
	Rated speed	3,000r/min
	Rated torque	1.7N·m

Synchronizer	Type No.	MPSA01A20

		Type No.
Console	Needle-up, patterns 1 to 4, back-tack number of fabrics stitched.	MPUD01A30 (AD30)

■ External Dimensional Drawing

Motor & Control Box

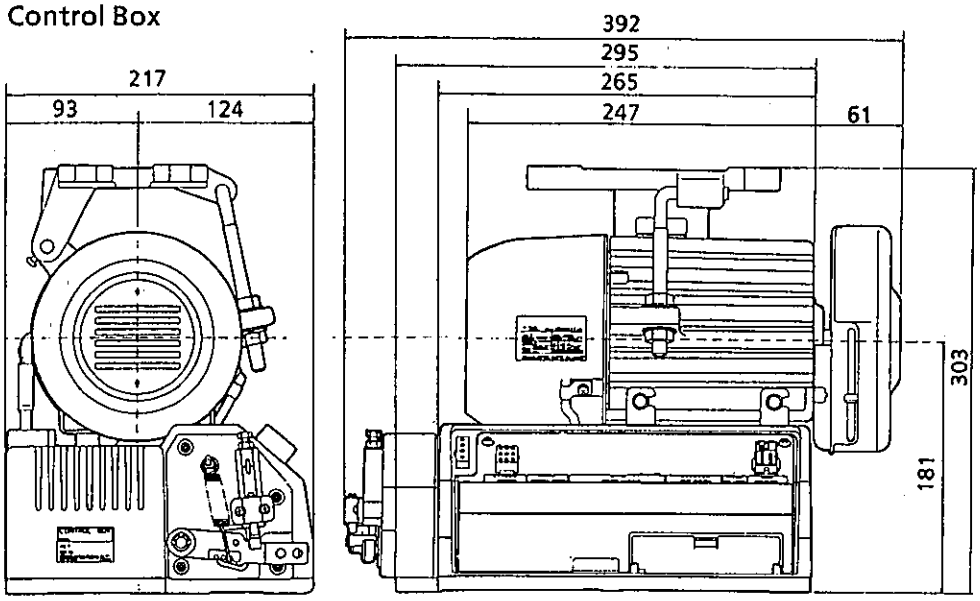

Slide base

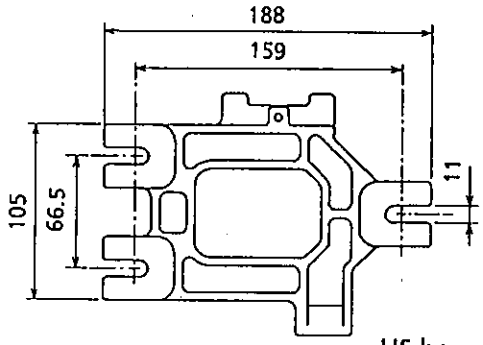

US base

Shaft

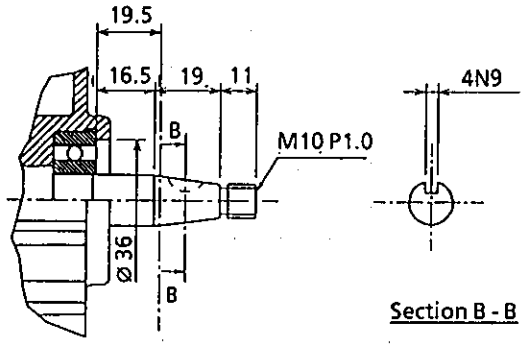

Power code

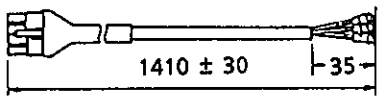

Pedal sensor lever

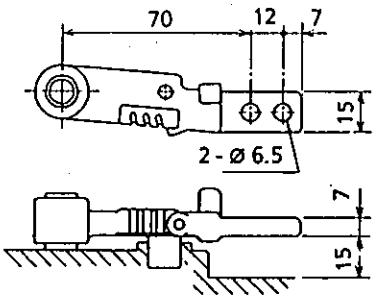

■ Console

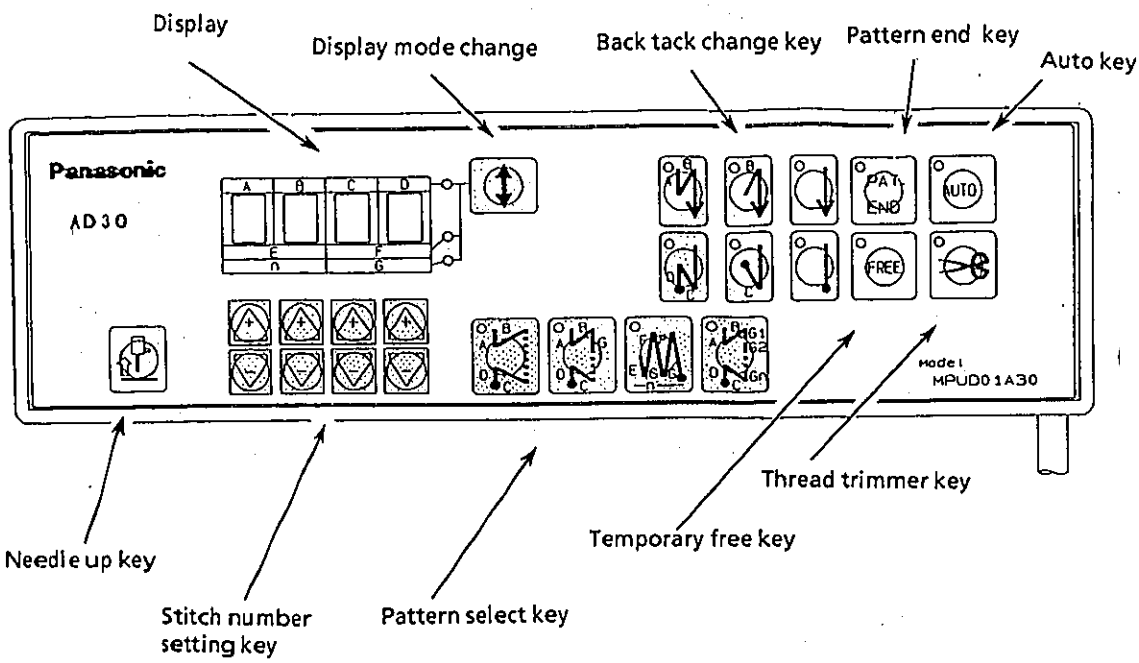

key is effective if it is pushed together with any other key at the same time.

Other key than is not effective if it is pushed together with any other key at the same time.

In this case the key which is pushed earlier will be effective.

keys are effective at any time while the sewing machine stops.

Other keys are effective only when the power switch is turned on and after thread trimming.

When key operation is not effective, buzzer tone "Pi, Pi" twice comes out for alarm.

Keep pushing and keys at the same time for more than 2 seconds, after this process, all setting is resetted back to the original factory setting.

Name of key	Function
Needle up key	When power is turned on, or the needle stays off the needle up position. After G stitch sewing finished, push the key to make low speed sewing. After each process of $G_1 \cdots G_n$, push the key to make low speed sewing.
Stitch number setting key	Change the digits + 1, or, - 1
Display Display mode change	Select a pattern of sewing (n time: n = 5 for this example) G for n = 1 G for n = 2 G for n = 3

Name of key	Function
Pattern select key	A stitches B stitches Free sewing Pedal heel back C stitches (Trimming) D stitches A B When heel back during A or B Or When heel back within 3 stitches after start, trimming will work without C, D back tacking.
	A B G C D (Trimming) PAT. END (Keep pedal stepped in) A B G Trimming Pedal heel back When heel back during G, trimming will work without C, D. A B G Pedal heel back C D (Trimming) PAT. END Pedal stepped in Stop Pedal neutral and step in, then free sewing

Name of key	Function
	  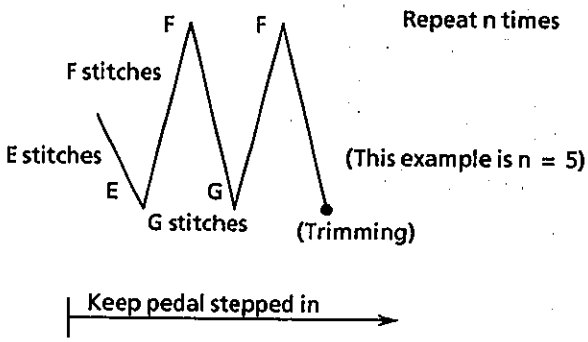 If E, F, G are all 0(zero), machine does not start.
	  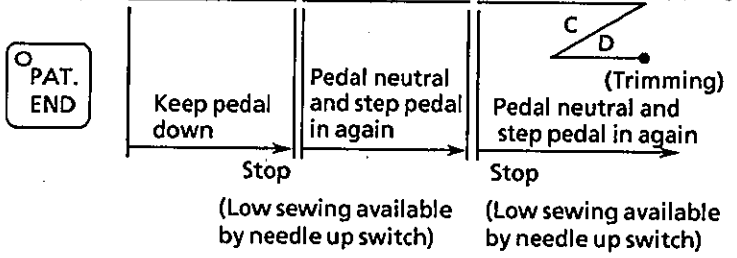 G1 means G stitches of n = 1 G2 means G stitches of n = 2 G3 means G stitches of n = 3 This example is G for 0 stitch for n = 4 G1 - G9 can be set individually. By setting 0(zero), you can finish a pattern. 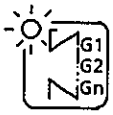

Name of key	Function
Back tack change key 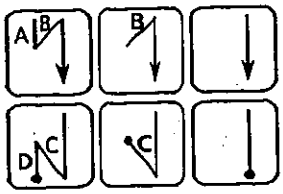	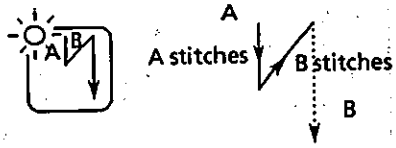 Double start BT
	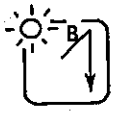 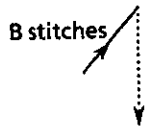 Single start BT
	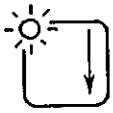 No start BT
	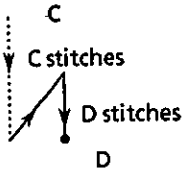 Double end BT
	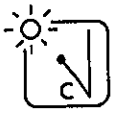 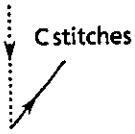 Single end BT
	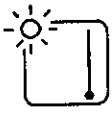 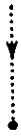 No end BT
Pattern end key	When or 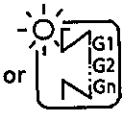 push key, machine will stop after finish of a pattern sewing. Then you step pedal in, you can sew freely. Then you heel back, end BT and trimming will follow.

Name of key	Function
Auto key AUTO	When G or G1 G2 Gn, machine can not be stopped untill finishing all Gn processes even if you put pedal to neutral position during the process. When n, motor will not stop untill conplete the all processes E, F, G, F ··· and then trimming even if you put pedal to neutral position during the process. When free sewing, AUTO key is not in function.
Temporary free key FREE	In G1 G2 Gn pattern select, you can set temporary free sewing for each process Gn instead setting stitch number, when you push FREE key. Display will show like this when temporary free sewing. n G A B G1 G2 G3 Free sewing Heel back C D Temporary free sewing Push FREE key to change to next process.

Name of key	Function
Trimming key	Trimming and wiper will work. Trimming and wiper will not work.

When this product is built in to equipment corresponding to strategic materials stipulated in the "Foreign Exchange and Foreign Trade Control Act", and exported or carried out to foreign countries, an export license issued by the Japanese Government is required.

Industrial Motor Division.
Matsushita Electric Industrial Co., Ltd.

1-1Morofuku 7 chome, Daitou City, Osaka 574, Japan
Tel(0720)71-1212 FAX(0720)70-3151